FE100-50-CM

FlexPro® Series
Product Status: Active

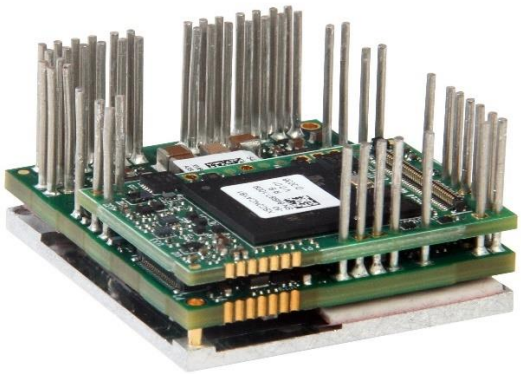

SPECIFICATIONS

Current Peak	**100 A**
Current Continuous	**50 A**
DC Supply Voltage	**20 – 90 VDC**
Network Communication	**CANopen**

The **FE100-50-CM** is a FlexPro® series servo drive with IMPACT™ architecture.

The **FE100-50-CM** offers full tuning control of all servo loops and is designed to drive brushed and brushless servo motors, stepper motors, and AC induction motors. The drive accepts a variety of external command signals, or can use the built-in Motion Engine, an internal motion controller used with Sequencing and Indexing commands. Programmable digital and analog I/O are included to enhance interfacing with external controllers and devices.

The **FE100-50-CM** features a CANopen interface for network communication and USB connectivity for drive configuration and setup. All drive and motor parameters are stored in non-volatile memory.

IMPACT™ (**I**ntegrated **M**otion **P**latform **A**nd **C**ontrol **T**echnology combines exceptional processing capability and high-current components to create powerful, compact, feature-loaded servo solutions. IMPACT™ is used in all FlexPro® drives and is available in custom products as well.

FEATURES

- Follows the CAN in Automation (CiA) 301 Communications Profile and 402 Device Profile
- Four Quadrant Regenerative Operation
- Programmable Gain Settings
- PIDF Velocity Loop
- Fully Configurable Current, Voltage, Velocity and Position Limits
- Compact Size, High Power Density
- On-the-Fly Mode Switching
- On-the-Fly Gain Set Switching
- Dedicated Safe Torque Off (STO) Inputs
- Space Vector Modulation (SVM) Technology

Feedback Supported	• Absolute Encoder
	  ○ BiSS C-Mode
	  ○ EnDat 2.2
	• Incremental Encoder
	• Hall Sensors
	• Aux Incremental Encoder
	• ±10 VDC Position
	• Tachometer (±10V)
		Motors Supported	• Three Phase
			• Single Phase
			• Stepper
			• AC Induction
				Modes of Operation	• Profile Modes
					• Cyclic Synchronous Modes
					• Current
					• Velocity
					• Position
					• Interpolated Position Mode (PVT)

Command Sources	• Over the Network • ±10V Analog • Sequencing • Indexing • Jogging • Step & Direction • Encoder Following	**Inputs / Outputs**	• 4 Programmable Digital Inputs • 3 Programmable Digital Outputs • 1 Programmable Analog Input	**Agency Approvals**	• RoHS • UL (Pending) • CE (Pending) • TUV Rheinland (STO) (Pending)

BLOCK DIAGRAM

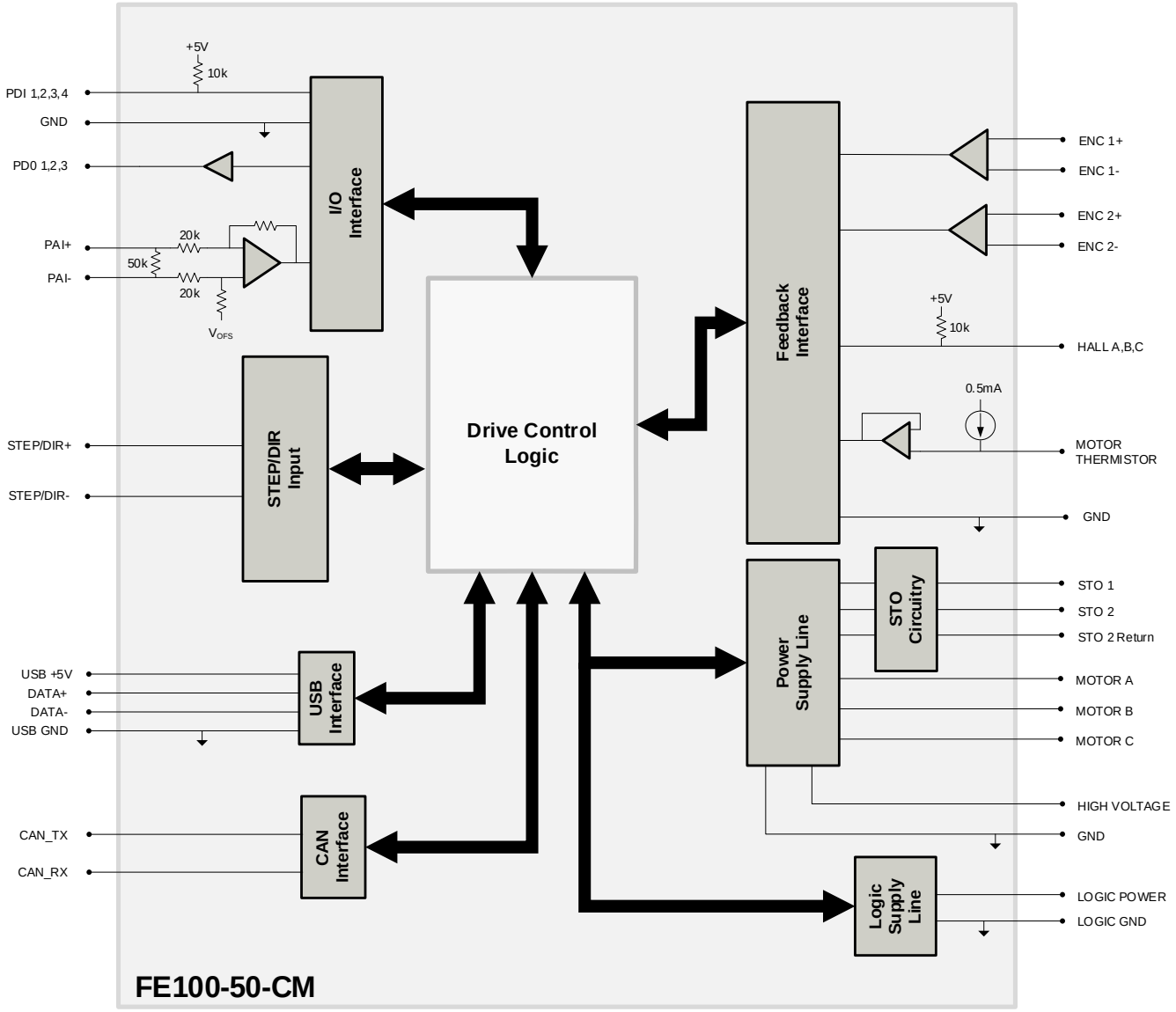

INFORMATION ON APPROVALS AND COMPLIANCES

RoHS Compliant

The RoHS Directive restricts the use of certain substances including lead, mercury, cadmium, hexavalent chromium and halogenated flame retardants PBB and PBDE in electronic equipment.

SPECIFICATIONS

Electrical Specifications		
Description	Units	Value
DC Supply Input Range	VDC	20 – 90
DC Supply Undervoltage	VDC	15
DC Supply Overvoltage	VDC	100
Logic Supply Input Range (required)	VDC	10 – 55
Safe Torque Off Voltage (Default)	VDC	5
Minimum Required External Bus Capacitance	µF	270
Maximum Peak Current Output[1]	A (Arms)	100 (70.7)
Maximum Continuous Current Output[2]	A (Arms)	50 (50)
Efficiency at Rated Power	%	99
Maximum Continuous Output Power	W	4455
Maximum Power Dissipation at Rated Power	W	45
Minimum Load Inductance (line-to-line)[3]	µH	250
Switching Frequency	kHz	20
Maximum Output PWM Duty Cycle	%	83

Control Specifications		
Description	Units	Value
Communication Interfaces	-	CANopen (USB for configuration)
Command Sources	-	±10 V Analog, Over the Network, Sequencing, Indexing, Jogging, Step & Direction, Encoder Following
Feedback Supported	-	Absolute Encoder (BiSS C-Mode, EnDat 2.2), Hall Sensors, Incremental Encoder, Auxiliary Incremental Encoder, ±10 VDC Position, Tachometer (±10V)
Commutation Methods	-	Sinusoidal, Trapezoidal
Modes of Operation	-	Profile Modes, Cyclic Synchronous Modes, Current, Velocity, Position, Interpolated Position Mode (PVT)
Motors Supported[4]	-	Three Phase (Brushless Servo), Single Phase (Brushed Servo, Voice Coil, Inductive Load), Stepper (2- or 3-Phase Closed Loop), AC Induction (Closed Loop Vector)
Hardware Protection	-	40+ Configurable Functions, Over Current, Over Temperature (Drive & Motor), Over Voltage, Short Circuit (Phase-Phase & Phase-Ground), Under Voltage
Programmable Digital Inputs/Outputs	-	4/3
Programmable Analog Inputs/Outputs	-	1/0
Primary I/O Logic Level	-	5 VDC, not isolated
Current Loop Sample Time	µs	50
Velocity Loop Sample Time	µs	100
Position Loop Sample Time	µs	100
Maximum Encoder Frequency	MHz	20 (5 pre-quadrature)

Mechanical Specifications		
Description	Units	Value
Size	mm (in)	43.2 x 38.1 x 12.4 (1.70 x 1.50 x 0.49)
Weight	g (oz)	42.5 (1.5)
Ambient Operating Temperature Range[5]	°C (°F)	0 – 65 (32 – 149)
Storage Temperature Range	°C (°F)	-40 – 85 (-40 – 185)
Relative Humidity	-	0-95%, non-condensing
Form Factor	-	PCB Mounted
P1 SIGNAL CONNECTOR	-	80-pin 0.4mm spaced connector
TERMINAL PINS	-	51x Terminal Pins

Notes

1. Capable of supplying drive rated peak current for 2 seconds with 10 second foldback to continuous value. Longer times are possible with lower current limits.
2. Continuous A_{rms} value attainable when RMS Charge-Based Limiting is used.
3. Lower inductance is acceptable for bus voltages well below maximum. Use external inductance to meet requirements.
4. Maximum motor speed for stepper motors is 600 RPM. Consult the hardware installation manual for 2-phase stepper wiring configuration.
5. Additional cooling and/or heatsink may be required to achieve rated performance.

PIN FUNCTIONS

P1 – Signal Connector

Pin	Name	Description / Notes	I/O	Pin	Name	Description / Notes	I/O
1	GROUND	Ground	GND	2	GROUND	Ground	GND
3	PAI-1+	Differential Programmable Analog Input or Reference Signal Input (12-bit Resolution)	I	4	DATA+ USB	USB Data Channel	I/O
5	PAI-1-		I	6	DATA- USB		I/O
7	THERMISTOR	Motor Thermal Protection.	I	8	GROUND	Ground	GND
9	GROUND	Ground	GND	10	SCLA	I²C Data Signals for Addressing, Network Error LED, and Bridge Status LED. See Hardware Manual for more info.	O
11	ENC 1 DATA+ / A+	Differential Data Line for Absolute Encoders (BiSS: SLO+/-) or Differential Incremental Encoder A.	I/O	12	SDAA		I/O
13	ENC 1 DATA- / A-		I/O	14	HALL A	Single-ended Commutation Sensor Inputs	I
15	ENC 1 CLK+ / B+	Differential Clock Line for Absolute Encoders (BiSS: MA+/-) or Differential Incremental Encoder B.	I/O	16	HALL B		I
17	ENC 1 CLK- / B-		I/O	18	HALL C		I
19	GROUND	Ground	GND	20	GROUND	Ground	GND
21	ENC 1 REF+ / I+	Differential Reference Mark for Absolute Encoders (Leave open for BiSS) or Differential Incremental Encoder Index.	I	22	ENC 2 A+	Differential Incremental Encoder A.	I
23	ENC 1 REF- / I-		I	24	ENC 2 A-		I
25	CAN_TX	CAN Transmit Line (requires external transceiver)	I/O	26	ENC 2 B+	Differential Incremental Encoder B.	I
27	CAN_RX	CAN Receive Line (requires external transceiver)	I/O	28	ENC 2 B-		I
29	CAN STANDBY	Low power CAN mode control	I/O	30	ENC 2 I+	Differential Incremental Encoder Index.	I
31	PDI-1	Programmable Digital Input	I	32	ENC 2 I-		I
33	PDI-2	Programmable Digital Input	I	34	PDO-1	Programmable Digital Output (TTL/8mA)	O
35	PDI-3	Programmable Digital Input	I	36	PDO-2	Programmable Digital Output (TTL/8mA)	O
37	PDI-4	Programmable Digital Input	I	38	PDO-3	Programmable Digital Output (TTL/8mA)	O
39	GROUND	Ground	GND	40	GROUND	Ground	GND
41	RESERVED	Reserved. Do not connect.	-	42	RESERVED	Reserved. Do not connect.	-
43	RESERVED	Reserved. Do not connect.	-	44	RESERVED	Reserved. Do not connect.	-
45	RESERVED	Reserved. Do not connect.	-	46	RESERVED	Reserved. Do not connect.	-
47	RESERVED	Reserved. Do not connect.	-	48	RESERVED	Reserved. Do not connect.	-
49	RESERVED	Reserved. Do not connect.	-	50	RESERVED	Reserved. Do not connect.	-
51	RESERVED	Reserved. Do not connect.	-	52	RESERVED	Reserved. Do not connect.	-
53	RESERVED	Reserved. Do not connect.	-	54	RESERVED	Reserved. Do not connect.	-
55	RESERVED	Reserved. Do not connect.	-	56	RESERVED	Reserved. Do not connect.	-
57	RESERVED	Reserved. Do not connect.	-	58	RESERVED	Reserved. Do not connect.	-
59	GROUND	Ground	GND	60	GROUND	Ground	GND
61	RESERVED	Reserved. Do not connect.	-	62	RESERVED	Reserved. Do not connect.	-
63	RESERVED	Reserved. Do not connect.	-	64	RESERVED	Reserved. Do not connect.	-
65	RESERVED	Reserved. Do not connect.	-	66	RESERVED	Reserved. Do not connect.	-
67	RESERVED	Reserved. Do not connect.	-	68	STEP	Step Input.	I
69	RESERVED	Reserved. Do not connect.	-	70	DIR	Direction Input.	I
71	RESERVED	Reserved. Do not connect.	-	72	RESERVED	Reserved. Do not connect.	-
73	+5V	+5VDC unprotected supply (See Note 1)	O	74	RESERVED	Reserved. Do not connect.	-
75	+5V USER	+5VDC User Supply for feedback and local logic (See Note 1)	O	76	+3V3 OUT	+3.3VDC Supply Output for local logic signals (100 mA max)	O
77	+5V USER		O	78	+3V3 OUT		O
79	GROUND	Ground	GND	80	GROUND	Ground	GND

Connector Information	80-pin, 0.4mm spaced connector
Mating Connector Details	PANASONIC: P/N AXT380224
Mating Connector Included with Drive	No

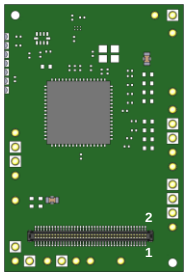

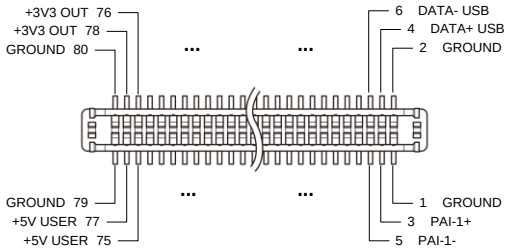

Notes

1. Total current through pins P1-73/75/77 should not exceed 300mA, while no single pin should be loaded more than 150mA.

Drive Status LED and Node Addressing

SCLA (P1-10); SDAA (P1-12)

The *SCLA and SDAA* pins allow Drive Status LED monitoring and Node Addressing to be performed with an I²C bus I/O expander. For more information on how to utilize and configure the I/O expander into an interface board, consult the hardware installation manual.

TERMINAL PIN LOCATIONS

The 51 Terminal Pins provide connection to the high power drive signals. Terminal Pins must be soldered to an interface board.

Pin	Name	Description / Notes	I/O
T1	STO-1 INPUT	Safe Torque Off – Input 1	I
T2	STO RETURN	Safe Torque Off Return	STORET
T3	STO-2 INPUT	Safe Torque Off – Input 2	I
T4	LOGIC PWR	Logic Supply Input (10-55 VDC) (required)	I
T5	POWER GND	Ground.	GND
T6	POWER GND		GND
T7	POWER GND		GND
T8	POWER GND		GND
T9	MOTOR C	Motor Phase C. All provided motor phase output pins must be used.	O
T10	MOTOR C		O
T11	MOTOR C		O
T12	MOTOR C		O
T13	MOTOR C		O
T14	MOTOR C		O
T15	MOTOR C		O
T16	MOTOR C		O
T17	HV	DC Supply Input (20-90 VDC). Minimum 270 µF external capacitance required between HV and POWER GND.	I
T18	HV		I
T19	HV		I
T20	HV		I
T21	HV		I
T22	HV		I
T23	HV		I
T24	HV		I
T25	HV		I
T26	HV		I
T27	MOTOR B	Motor Phase B. All provided motor phase output pins must be used.	O
T28	MOTOR B		O
T29	MOTOR B		O
T30	MOTOR B		O
T31	MOTOR B		O
T32	MOTOR B		O
T33	MOTOR B		O
T34	MOTOR B		O
T35	POWER GND	Ground.	GND
T36	POWER GND		GND
T37	POWER GND		GND
T38	POWER GND		GND
T39	POWER GND		GND
T40	POWER GND		GND
T41	POWER GND		GND
T42	POWER GND		GND
T43	POWER GND		GND
T44	MOTOR A	Motor Phase A. All provided motor phase output pins must be used.	O
T45	MOTOR A		O
T46	MOTOR A		O
T47	MOTOR A		O
T48	MOTOR A		O
T49	MOTOR A		O
T48	MOTOR A		O
T49	MOTOR A		O
T50	MOTOR A		O
T51	MOTOR A		O

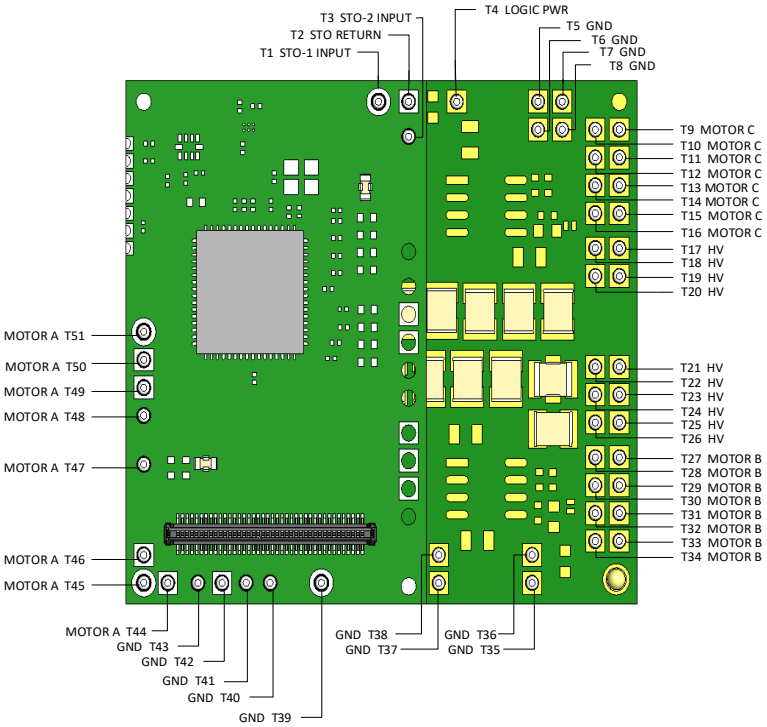

Terminal Pin Details

Safe Torque Off (STO) Inputs

The Safe Torque Off (STO) inputs are dedicated +5VDC sinking single-ended inputs. For applications not using STO functionality, disabling of the STO feature is required for proper drive operation. STO may be disabled by following the STO Disable wiring instructions as given in the hardware installation manual. Consult the hardware installation manual for more information.

MOUNTING DIMENSIONS

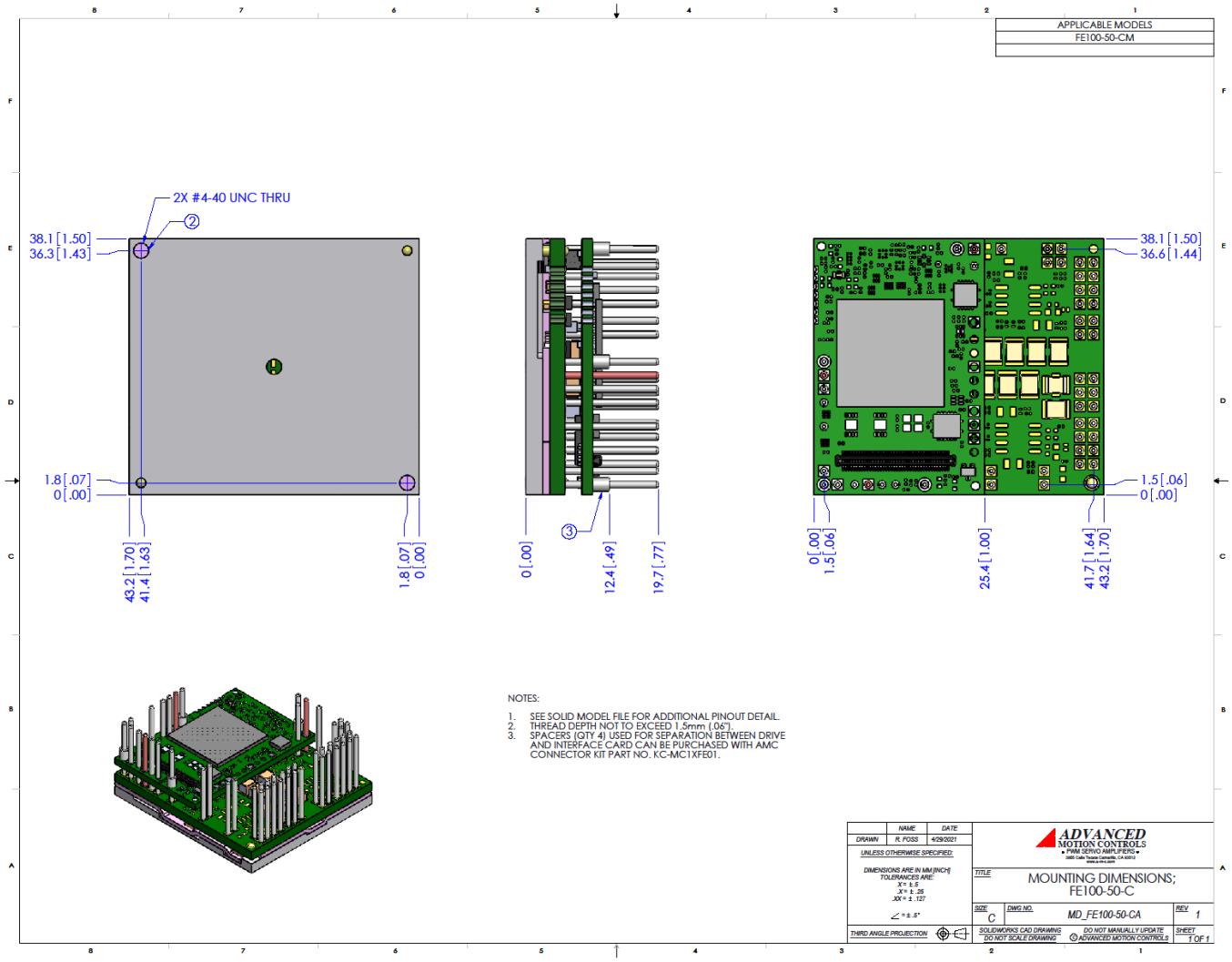

PART NUMBERING AND CUSTOMIZATION INFORMATION

F E 100 – 50 – C M

Drive Series

F	FlexPro®

Environment

X	EXtended Environment

Form Factor

E	FlexPro® Embedded
D	FlexPro® E (W/ Development board)
M	FlexPro® Machine Mount

Maximum DC Bus Voltage

060	60 VDC
100	100 VDC

Feedback

M	Multi Encoder (BiSS, 5V Incremental)

Network Communication

E	EtherCAT
C	CANopen

Continuous Current

5	5A
10	10A
25	25A
45C	45A (continuous only, no peak)
50	50A

ADVANCED Motion Controls also has the capability to promptly develop and deliver specified products for OEMs with volume requests. Our Applications and Engineering Departments will work closely with your design team through all stages of development in order to provide the best servo drive solution for your system. Equipped with on-site manufacturing for quick-turn customs capabilities, *ADVANCED* Motion Controls utilizes our years of engineering and manufacturing expertise to decrease your costs and time-to-market while increasing system quality and reliability.

Examples of Customized Products

- Optimized Footprint
- Private Label Software
- OEM Specified Connectors
- No Outer Case
- Increased Current Resolution
- Increased Temperature Range
- Custom Control Interface
- Integrated System I/O
- Tailored Project File
- Silkscreen Branding
- Optimized Base Plate
- Increased Current Limits
- Increased Voltage Range
- Conformal Coating
- Multi-Axis Configurations
- Reduced Profile Size and Weight

Feel free to contact us for further information and details!

Available Accessories

ADVANCED Motion Controls offers a variety of accessories designed to facilitate drive integration into a servo system. Visit www.a-m-c.com to see which accessories will assist with your application design and implementation.

Development Board

The FE100-50-CM is offered in a pre-soldered development board assembly to provide easy connections to motor, power, and signal functions. The development board assembly can be ordered as model number **FD100-50-CM**.

All specifications in this document are subject to change without written notice. Actual product may differ from pictures provided in this document.