Sold & Serviced By:
ELECTROMATE
Toll Free Phone (877) SERVO98
Toll Free Fax (877) SERV099
www.electromate.com
sales@electromate.com

AVM Series

Voice Coil Actuators

Direct drive, zero cogging,

zero backlash voice coil motors

Low coil mass with very fast response and bandwidth

No contact between coil and core movement

(no wear and tear)

Smooth motion at low speeds with limitless resolution

(depends on feedback device)

Where Precision Matters

Akribis™

Sold & Serviced By:
ELECTROMATE
Toll Free Phone (877) SERV098
Toll Free Fax (877) SERV099
www.electromate.com
sales@electromate.com

AVM Specifications

Model	Units	AVM 12-6.4	AVM 19-5	AVM 20-10	AVM24-5	AVM24-10
Stroke	mm	6.4	5	10	5	10
Force sensitivity (at mid stroke)	N/A	0.57	1.75	2.00	3.00	3.90
Back EMF constant	V/m/s	0.57	1.75	2.00	3.00	3.90
Continuous force (at 100 ℃)*	N	0.91	1.75	1.56	2.10	2.65
Continuous force (at 155 ℃)*	N	1.14	2.22	2.18	2.85	3.59
Peak force	N	3.5	7.9	7.6	11.4	14.8
Resistance	ohms	1.13	2.2	3.6	3.1	5.9
Inductance	mH	0.09	0.27	0.50	0.51	1.23
Voltage at peak force	V	7.0	10.0	13.6	11.7	22.3
Continuous current (coil at 100 ℃)*	A	1.60	1.00	0.78	0.70	0.68
Continuous current (coil at 155 ℃)*	A	2.00	1.27	1.09	0.95	0.92
Peak current	A	6.2	4.5	3.8	3.8	3.8
Actuator constant	N/SqRt(W)	0.54	1.17	1.06	1.71	1.61
Continuous power (at 100 ℃)*	W	2.89	2.23	2.18	1.51	2.71
Electrical time constant	ms	0.1	0.1	0.1	0.2	0.2
Mechanical time constant	ms	17.4	6.0	9.7	3.4	7.1
Clearance of coil	mm	0.35	0.40	0.50	0.50	0.50
Power at peak force	W	43.4	45.2	51.8	44.6	84.6
Thermal dissipation constant	W/℃	0.039	0.030	0.029	0.020	0.036
Max coil temperature	℃	155.0	155.0	155.0	155.0	155.0
Coil assembly mass	g	5.0	8.3	10.8	9.8	18.3
Core assembly mass	g	7.9	24.3	32.1	30.7	45.0
* Continuous force measured without any additional mounting plate or heat sink on coil						

Sold & Serviced By:
ELECTROMATE
Toll Free Phone (877) SERV098
Toll Free Fax (877) SERV099
www.electromate.com
sales@electromate.com

AVM Specifications

Model	Units	AVM 30-15	AVM 40-20	AVM 60-25	AVM 90-30
Stroke	mm	15	20	25	30
Force sensitivity (at mid stroke)	N/A	7.35	12.90	17.00	22.50
Back EMF constant	V/m/s	7.35	12.90	17.00	22.50
Continuous force (at 100 ℃)*	N	4.63	9.93	26.35	74.25
Continuous force (at 155 ℃)*	N	5.88	13.16	34.00	96.75
Peak force	N	29.4	58.1	119.0	315.0
Resistance	ohms	10.2	12.1	5.4	2.7
Inductance	mH	2.63	5.12	3.73	3.20
Voltage at peak force	V	40.9	54.5	37.6	37.8
Continuous current (coil at 100 ℃)*	A	0.63	0.77	1.55	3.3
Continuous current (coil at 155 ℃)*	A	0.80	1.02	2.00	4.3
Peak current	A	4.0	4.5	7.0	14.0
Actuator constant	N/SqRt(W)	2.30	3.71	7.34	13.69
Continuous power (at 100 ℃)*	W	4.06	7.17	12.90	29.40
Electrical time constant	ms	0.3	0.4	0.7	1.2
Mechanical time constant	ms	4.8	4.8	4.0	4.3
Clearance of coil	mm	0.60	0.60	0.70	0.65
Power at peak force	W	163.5	245.0	263.1	529.2
Thermal dissipation constant	W/℃	0.054	0.096	0.172	0.392
Max coil temperature	℃	155.0	155.0	155.0	155.0
Coil assembly mass	g	25.6	65.8	214.6	800.0
Core assembly mass	g	95.3	226.1	684.0	1750.0
* Continuous force measured without any additional mounting plate or heat sink on coil					

Akribis

Sold & Serviced By:
ELECTROMATE
Toll Free Phone (877) SERV098
Toll Free Fax (877) SERV099
www.electromate.com
sales@electromate.com

AVM12-6.4

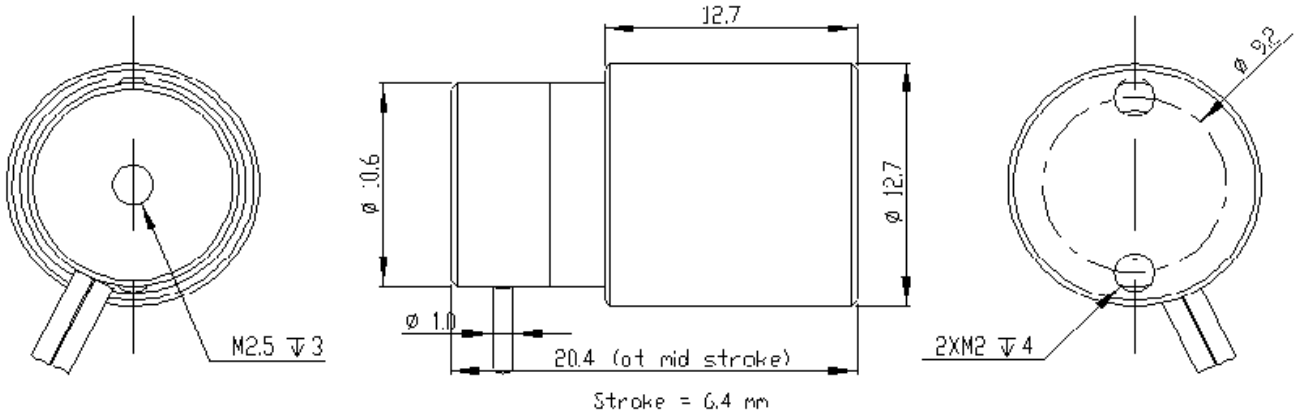

AVM19-5

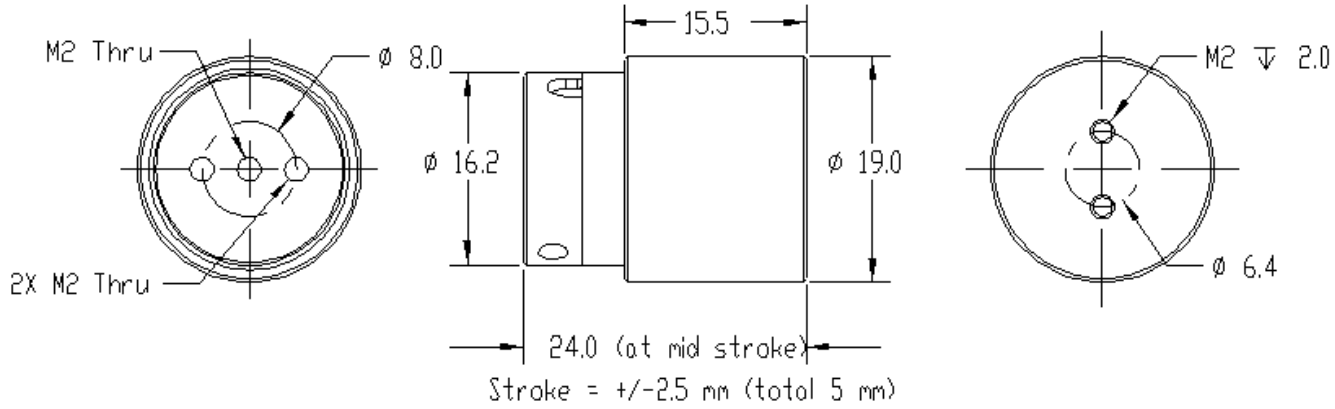

AVM20-10

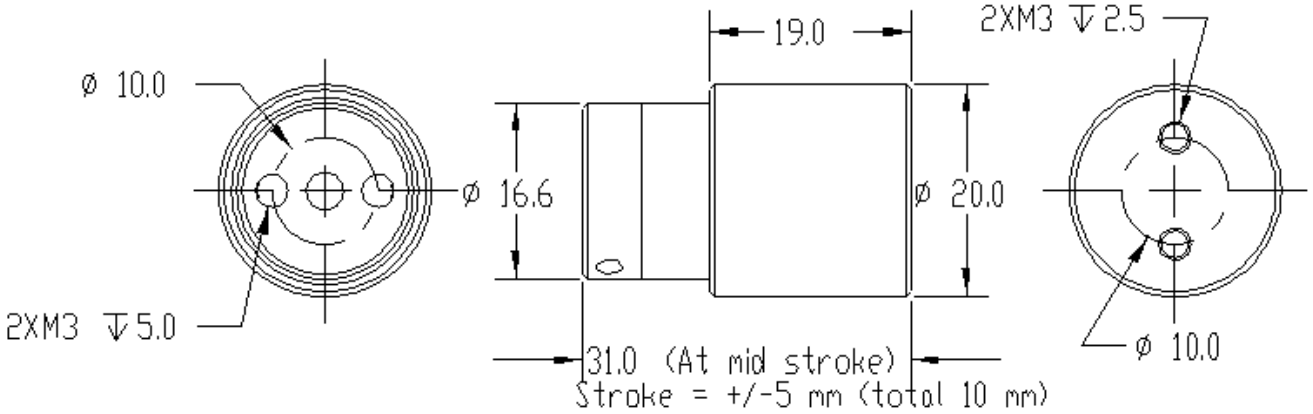

Akribis

Sold & Serviced By:
ELECTROMATE
Toll Free Phone (877) SERV098
Toll Free Fax (877) SERV099
www.electromate.com
sales@electromate.com

AVM24-5

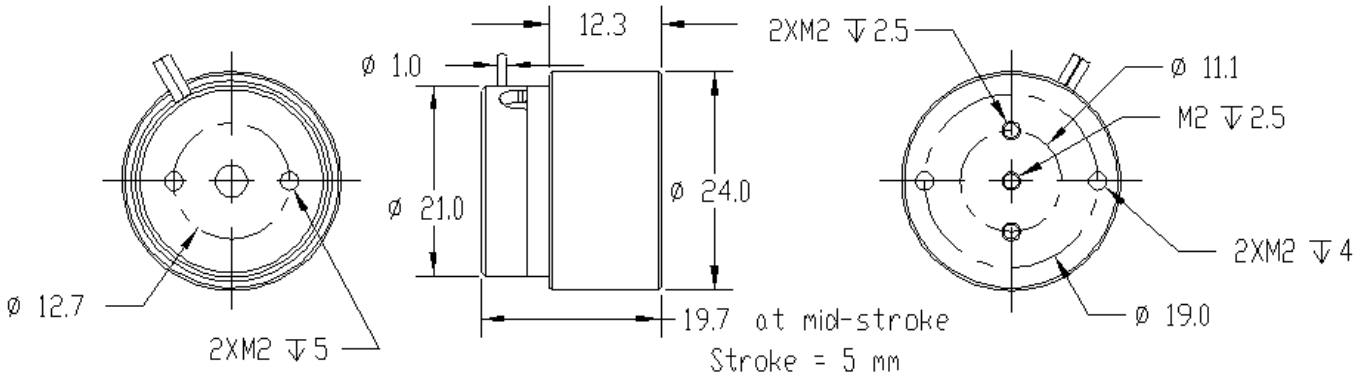

AVM24-10

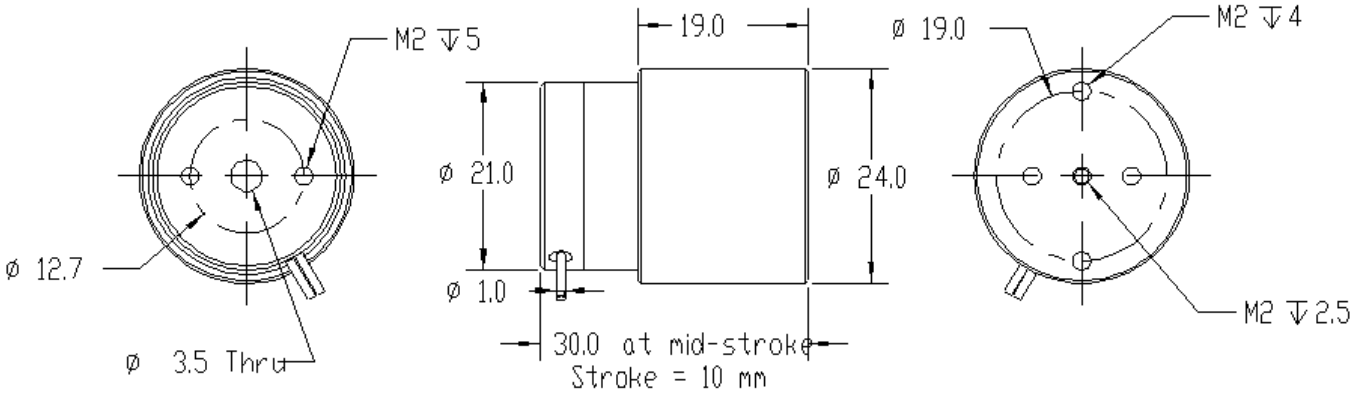

AVM30-15

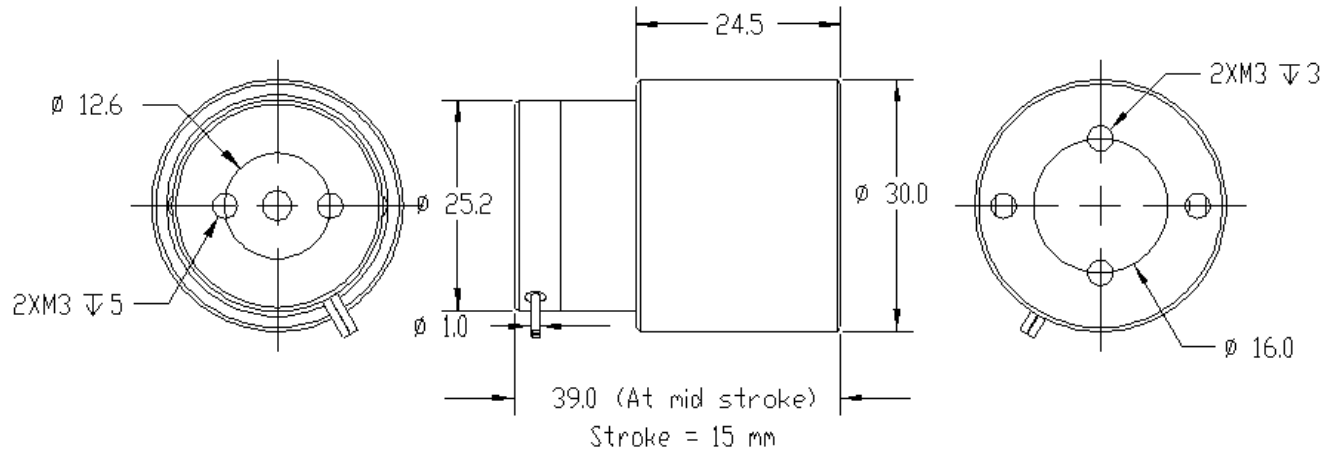

Akribis

Sold & Serviced By:
ELECTROMATE
Toll Free Phone (877) SERV098
Toll Free Fax (877) SERV099
www.electromate.com
sales@electromate.com

AVM40-20

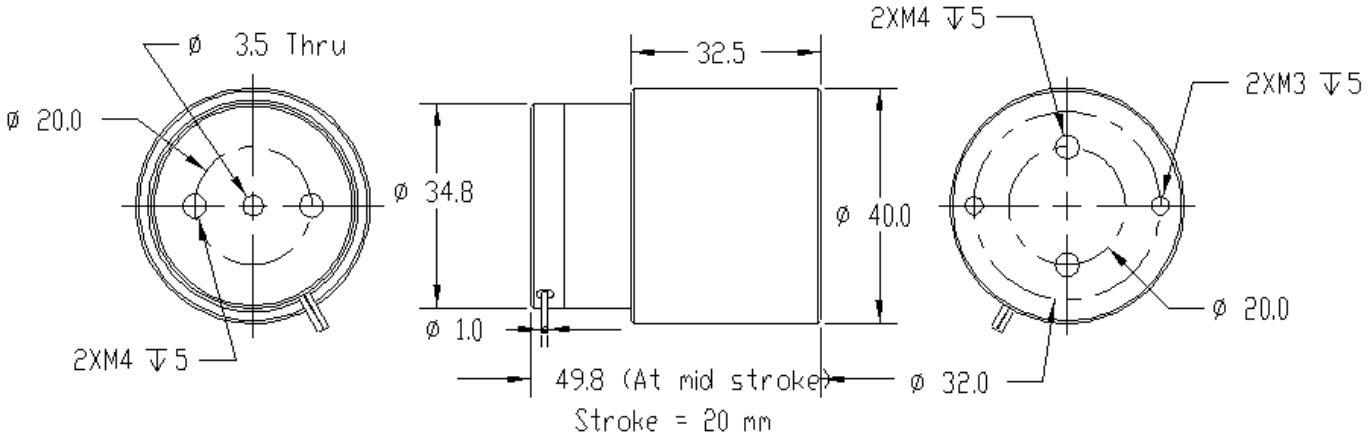

AVM60-25

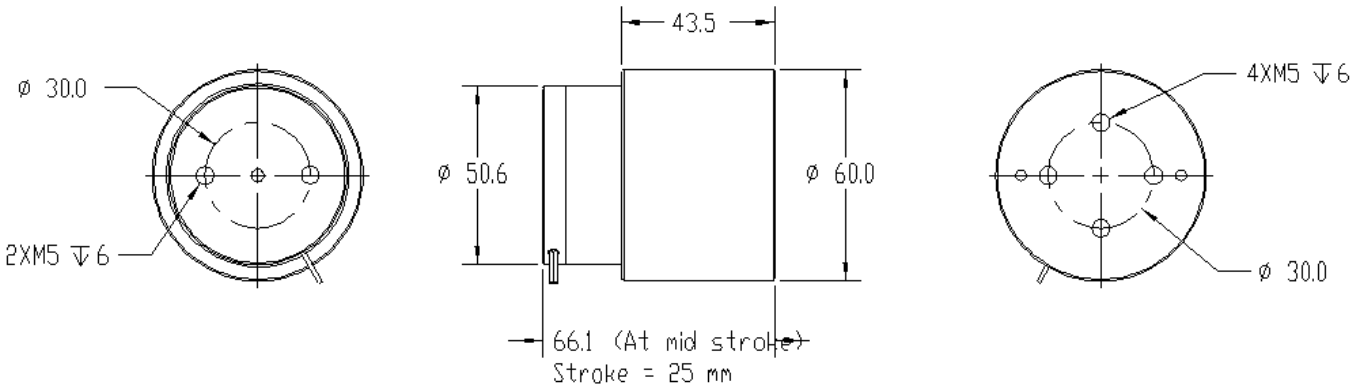

AVM90-30

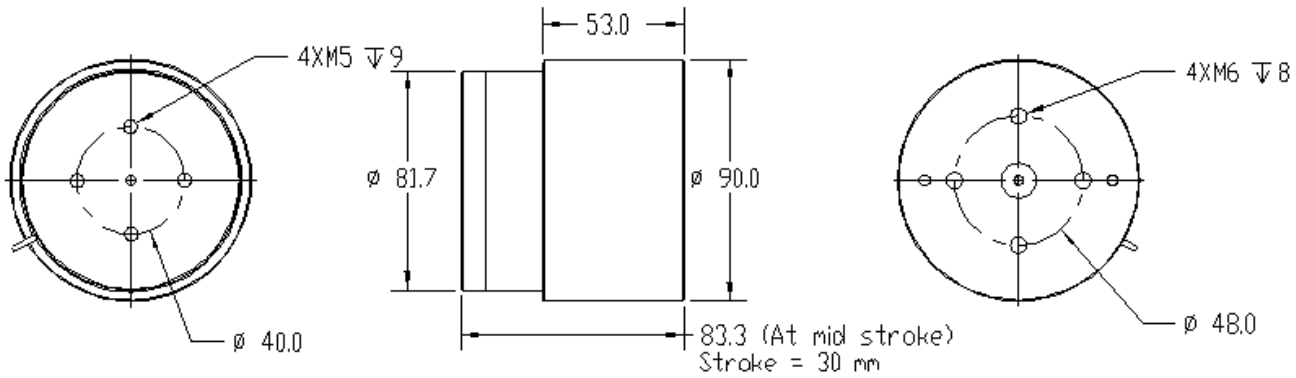

Akribis

Sold & Serviced By:
ELECTROMATE
Toll Free Phone (877) SERV098
Toll Free Fax (877) SERV099
www.electromate.com
sales@electromate.com

AVM-HF Specifications (Patented Design)

Model	Units	AVM 35-HF-7	AVM 40-HF-6.5	AVM 50-HF-10	AVM 60-HF-10
Stroke	mm	7	6.5	10	10
Force sensitivity (at mid stroke)	N/A	16.00	20.70	28.00	32.00
Back EMF constant	V/m/s	16.00	20.70	28.00	32.00
Continuous force (at 100 ℃)*	N	14.40	16.56	33.60	51.20
Continuous force (at 155 ℃)*	N	18.40	22.77	43.68	67.20
Peak force	N	72.0	93.2	140.0	224.0
Resistance	ohms	9.8	11.3	8.6	5.9
Inductance	mH	3.60	4.47	5.30	4.01
Voltage at peak force	V	44.1	50.9	43.2	41.4
Continuous current (coil at 100 ℃)*	A	0.90	0.80	1.20	1.60
Continuous current (coil at 155 ℃)*	A	1.15	1.10	1.56	2.10
Peak current	A	4.5	4.5	5.0	7.0
Actuator constant	N/SqRt(W)	5.11	6.16	9.53	13.16
Continuous power (at 100 ℃)*	W	7.94	7.24	12.44	15.13
Electrical time constant	ms	0.4	0.4	0.6	0.7
Mechanical time constant	ms	2.0	1.8	1.6	1.4
Clearance of coil	mm	0.50	0.60	0.60	0.70
Power at peak force	W	198.5	229.0	216.0	289.6
Thermal dissipation constant	W/℃	0.106	0.097	0.166	0.202
Max coil temperature	℃	155.0	155.0	155.0	155.0
Coil assembly mass	g	52.9	67.7	145.3	239.3
Core assembly mass	g	149.8	221.4	562.2	1018.0
* Continuous force measured without any additional mounting plate or heat sink on coil					

Akribis

Sold & Serviced By:
ELECTROMATE
Toll Free Phone (877) SERV098
Toll Free Fax (877) SERV099
www.electromate.com
sales@electromate.com

AVM-HF Specifications (Patented Design)

Model	Units	AVM90-HF-10	AVM100-HF-10	AVM 130-HF-10	AVM250-HF-20
Stroke	mm	10	10	10	20
Force sensitivity (at mid stroke)	N/A	43.62	55.00	54.60	168.40
Back EMF constant	V/m/s	43.62	55.00	54.60	168.40
Continuous force (at 100 ℃)*	N	152.67	192.50	360.36	1111.44
Continuous force (at 155 ℃)*	N	196.29	247.50	469.56	1448.24
Peak force	N	610.7	770.0	764.4	4715.2
Resistance	ohms	2.9	3.4	1.5	3.7
Inductance	mH	3.59	4.12	1.70	5.00
Voltage at peak force	V	40.6	47.9	20.7	103.6
Continuous current (coil at 100 ℃)*	A	3.5	3.5	6.6	6.6
Continuous current (coil at 155 ℃)*	A	4.5	4.5	8.6	8.6
Peak current	A	14.0	14.0	14.0	28.0
Actuator constant	N/SqRt(W)	25.61	29.74	44.88	87.55
Continuous power (at 100 ℃)*	W	35.53	41.90	64.47	161.17
Electrical time constant	ms	1.2	1.2	1.1	1.4
Mechanical time constant	ms	1.5	1.2	0.7	0.8
Clearance of coil	mm	0.65	0.65	0.55	0.90
Power at peak force	W	568.4	670.3	290.1	2900.8
Thermal dissipation constant	W/℃	0.474	0.559	0.860	2.149
Max coil temperature	℃	155.0	155.0	155.0	155.0
Coil assembly mass	g/Kg	954.0	1077.0	1.40	5.90
Core assembly mass	g/Kg	2400.0	3277.0	9.40	27.20
* Continuous force measured without any additional mounting plate or heat sink on coil					

Sold & Serviced By:
ELECTROMATE
Toll Free Phone (877) SERV098
Toll Free Fax (877) SERV099
www.electromate.com
sales@electromate.com

AVM35-HF-7

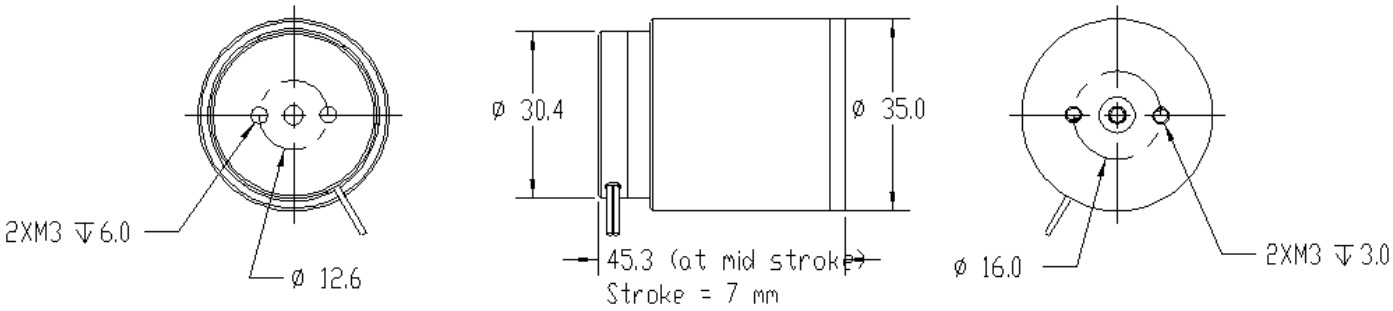

AVM40-HF-6.5

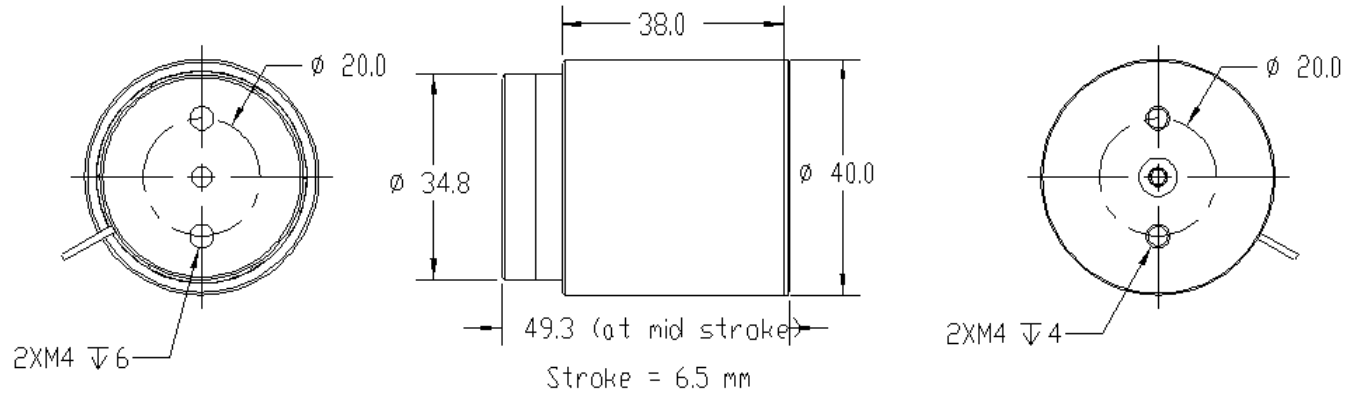

AVM50-HF-10

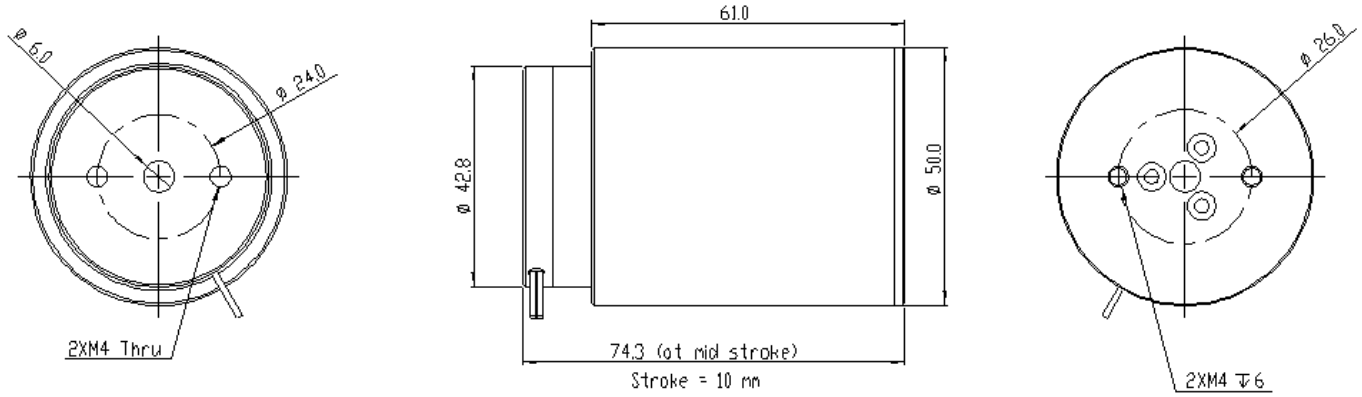

Akribis

Sold & Serviced By:
ELECTROMATE
Toll Free Phone (877) SERV098
Toll Free Fax (877) SERV099
www.electromate.com
sales@electromate.com

AVM60-HF-10

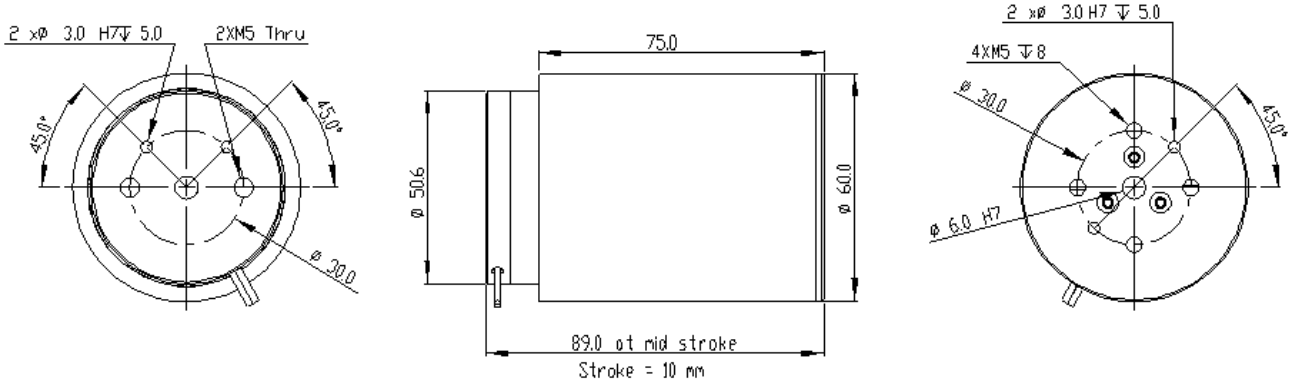

AVM90-HF-10

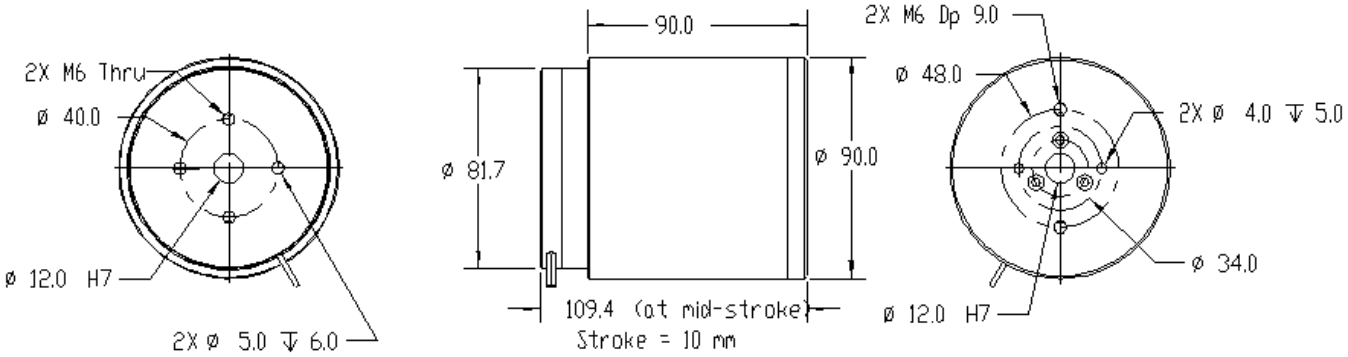

AVM100-HF-10

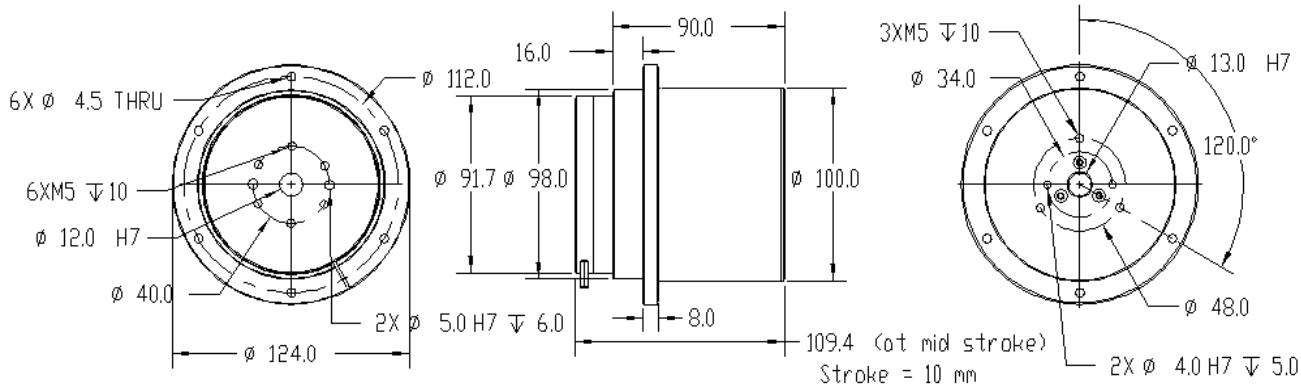

Sold & Serviced By:
ELECTROMATE
Toll Free Phone (877) SERV098
Toll Free Fax (877) SERV099
www.electromate.com
sales@electromate.com

AVM130-HF-25

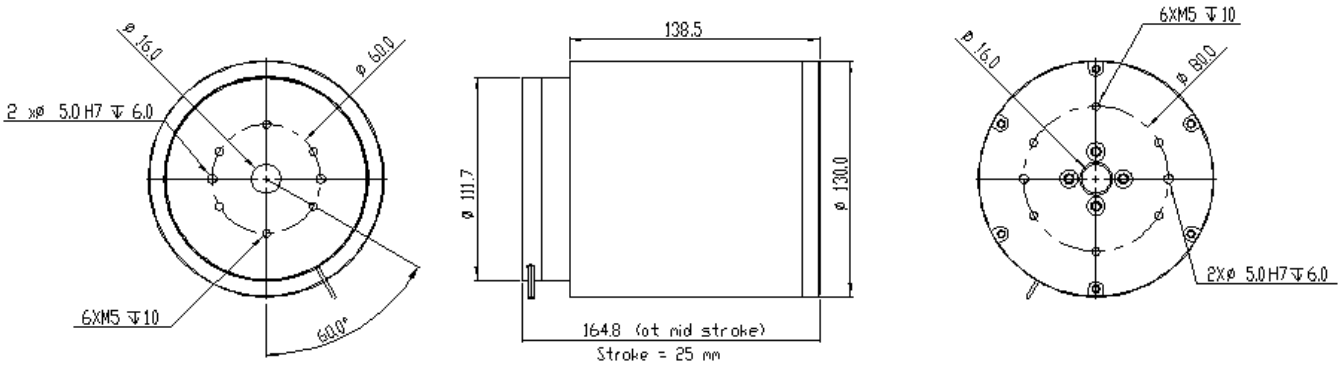

AVM250-HF-20

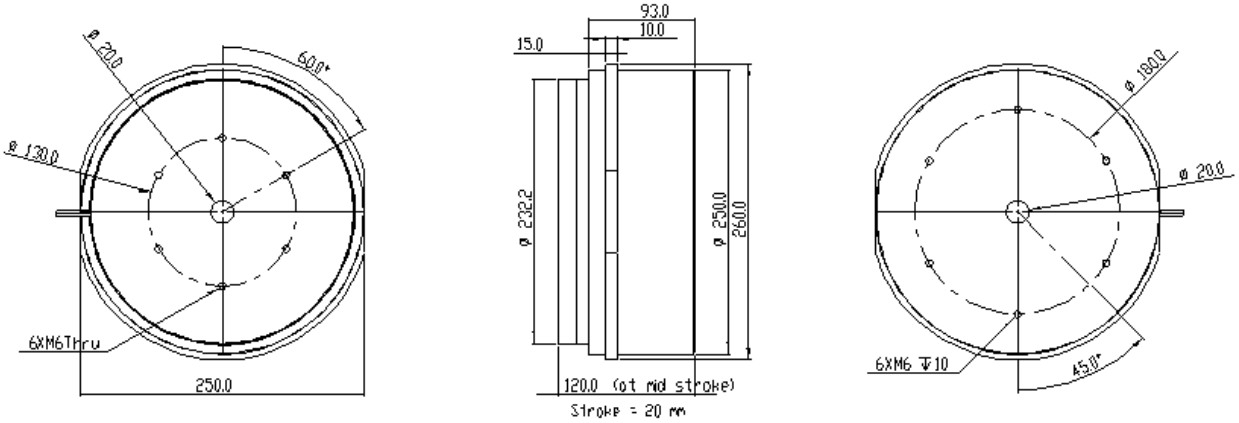

Part Numbering

Example: AVM30-15-0.5

Standard models:

Model and stroke	Cable length (m)
AVM 12-6.4	0.5
AVM 19-5	
AVM 20-10	
AVM 24-5	
AVM 24-10	
AVM 30-15	
AVM 40-20	
AVM 60-25	
AVM 90-30	

High force models:

Model and stroke	Cable length (m)
AVM 35-HF-7	0.5
AVM 40-HF-6.5	
AVM 50-HF-10	
AVM 60-HF-10	
AVM 90-HF-10	
AVM 100-HF-10	
AVM 130-HF-25	
AVM 250-HF-20	

Akribis