Direct Drive Rotary Motors

High torque density

Low rotor inertia

High encoder resolution

Where Precision Matters

Akribis®

Direct Drive Rotary Motors (EN)-15-1.0

Akribis

Akribis is a Latinized Greek word that means "Precision". On the Akribis logo, the letter "a" is formed by a line and a circle, representing linear and rotary motions. These are supported by a tetrahedron structure, the same structure as the diamond crystal which has many exceptional physical properties.

The logo signifies that Akribis Systems' sound engineering expertise is the basis of the company's foundation, and this enables us to provide customers with precise, direct drive motion control solutions.

Akribis Systems Pte Ltd was founded in Aug 2004. We design and manufacture direct drive motors, stages and precision systems that are used in equipment for manufacturing, inspection and testing. Akribis Systems supports a wide range of industries including semiconductor, solar, flat panel, hard disk, LED, printed circuit board, printing, photonics and biomedical manufacturing.

From the beginning, the company has been focusing on innovation and development of new technologies and solutions in motion control, with more than 15 patents applied, of which 6 have been granted. Backed by a very strong and committed engineering team, the company continues to develop custom motors and systems for the most demanding applications.

The corporate headquarters of Akribis Systems is situated in Singapore. We have manufacturing facilities both in Singapore and in Shanghai, China.

Our sales network includes our overseas sales offices in USA, South Korea, Japan and Thailand, and is reinforced by our comprehensive distribution channels in Asia, Europe and North America.

Akribis China (Shanghai)

Akribis USA (Silicon Valley)

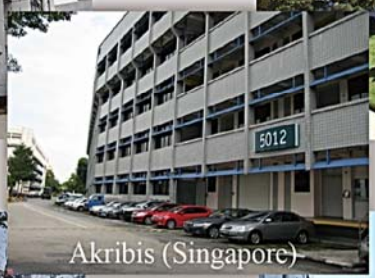

Akribis (Singapore)

Akribis (Korea)

Akribis (Japan)

Contents

Direct DriveRotary Motors

www.akribis-sys.com

Selection Guide

Type	Characteristics and advantages	Typical applications
ADR-A Series 	High torque density Small form factor Sizes:110 mm, 135 mm, 175 mm, 220 mm, 360 mm	All types of applications
ADR-B Series 	High torque density Large centre hole Sizes:110 mm, 135 mm, 175 mm, 220 mm	All types of applications
ADR-P Series 	Similar to ADR-A Series but offered as frameless motors Sizes: 110 mm, 135 mm, 175 mm, 220 mm, 360 mm	Applications that have space constraint, and custom design of mounting is required (eg. Robots)
ACD Series 	Zero cogging torque Smooth motion at low speed; low velocity ripple Size: 62 mm, 120 mm, 200 mm	Applications requiring smooth motion at low speed
ATR Series 	Super high torque Super low rotor inertia Excellent dynamic performance Size: 152mm, 175mm	High performance applications that require fast indexing motion (eg. 15 Degrees to 180 Degrees move in the shortest possible time)
ACW Series 	Large centre hole Low profile Zero cogging torque Size: 120mm, 170mm, 220mm	Alignment of semiconductor wafer plat panel etc.

Introduction to Akribis Direct Drive Rotary Motors

Direct drive rotary motors (DDR) are motors that are designed to drive loads directly without the need of any transmission mechanism, such as gears or belts. These motors are also called torque motors. They use high energy permanent magnets to generate high torque.

Akribis offers various types of DDRs, including ADR-A series, ADR-P series and ACD series. We also design many customized direct drive motors according to specific applications.

■ ADR-A Series

The ADR-A series motors are iron core type of brushless motors. Through our unique winding design, our ADR-A series motors produce very high torque, compared to other motors in the industry. The form factor of our ADR-A series motors is also smaller than competitor products. With low rotor inertia, these motors give better response and settling time. The maximum speed for our motors is also relatively higher than other motors.

The figures below show the windings of a conventional DDR and our ADR-A Series.

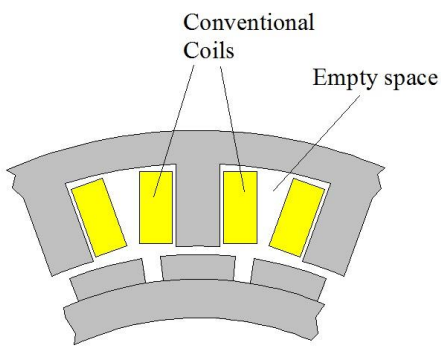

Conventional DDR

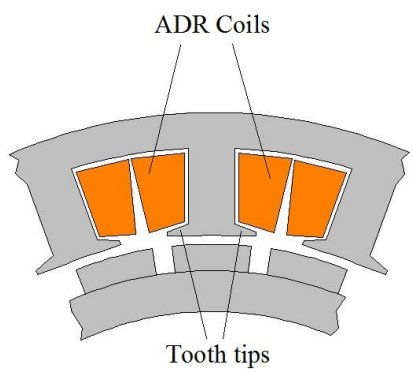

ADR-A Series

For a conventional DDR, the coils are wound and inserted into the slots, between the teeth of the stator. The coils have rectangular shapes when viewed from the top. There is inherently a large empty space in the slot, between two sets of coils. This space is a wasted, since the available magnetic flux is not used to produce any torque in this region.

For the ADR-A Series, the coils are wound with a special technique, and up to 35% more coils can be wound, fully utilizing the space in the slots. This results in much higher torque from the motor with the same form factor.

The ADR-A Series also has tooth tips on the stator teeth. This design minimizes cogging torque significantly, without compromise on the motor performance. Akribis design engineers put in a lot of effort to optimize the performance of our motors, including reducing cogging torque to a minimum.

Below is an example that shows the cogging torque of a motor at different positions.

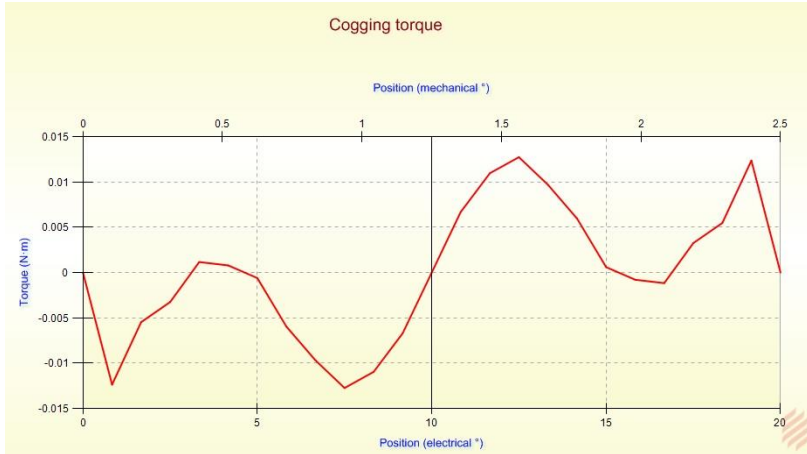

The illustration below shows a comparison of our ADR175-A-138, with other motors of similar diameter.

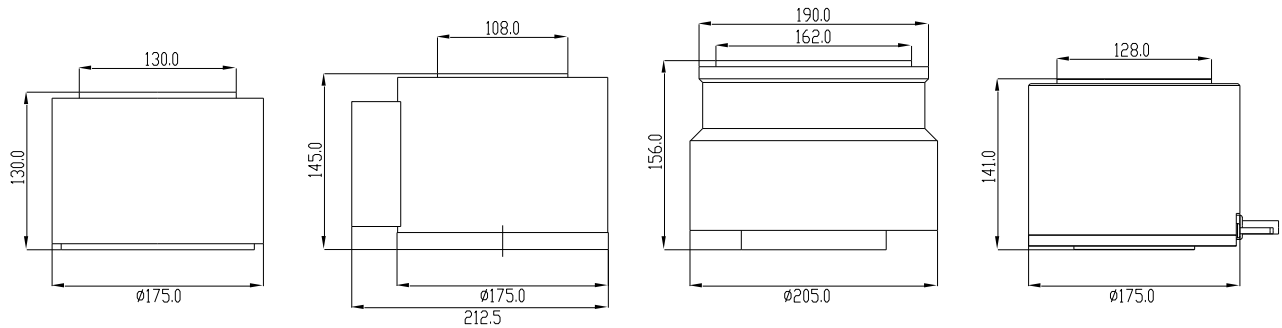

YA KM YG Akribis

Brand/Models	Unit	**Brand YA**	**Brand KM**	**Brand YG**	**Akribis ADR175-A-138**	**Our advantages**
Outer diameter	mm	175.0	175.2	190.0 (205.0)	175.0	
Motor height	mm	130.0	145.0	156.0	141.0	Low height
Peak torque	Nm	42.0	32.8	30.0	98.6	Highest peak torque
Continuous torque	Nm	14.0	9.8	Not published	32.9	Highest continuous torque
Max Speed (230VAC)	rpm	300	498	120	550	Highest speed
Rotor Inertia	Kgm2	0.022	0.0071	0.072	0.0076	Low rotor inertia

The ADR-A series motors are designed with low cogging toque. They are fully integrated with bearing and different options of encoder, optical encoder with digital output, and optical encoder with SINCOS. The motors also come with low and high speed windings (S or P).

■ ADR-P Series

The ADR-P series motors are similar to the ADR-A series motors, except that these are frameless motors, which allow flexible integration into systems. These motors are supplied with hall sensors as standard, to allow easy interfacing with different types of servo amplifiers and controllers.

■ ACD Series

The ACD series motors are coreless type of brushless motors. These motors do not produce any cogging torque, which allows smooth motion to be achieved, with low velocity ripple. The unique winding design also gives high torque density, although the output torque is lower than the ADR-A series motors.

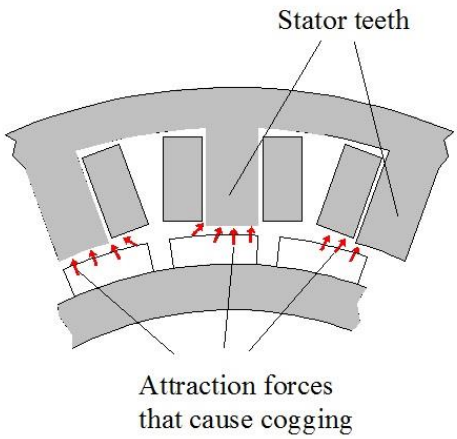

Conventional iron core DDR

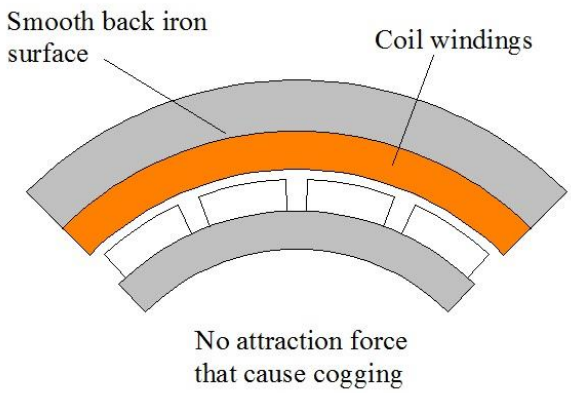

ACD Series

These motors are also integrated with high precision bearings, which give good radial and axial runout. High resolution optical encoders with digital output and SINCOS are available as options. The motors also come with low and high speed winding connections (D or Y).

■ ATR Series

Patent Pending

Revolutionary Design

The ATR series is the latest revolutionary direct drive motor from Akribis Systems. The patent pending design enables the motor to have very high torque, yet the motor rotor inertia is very low.

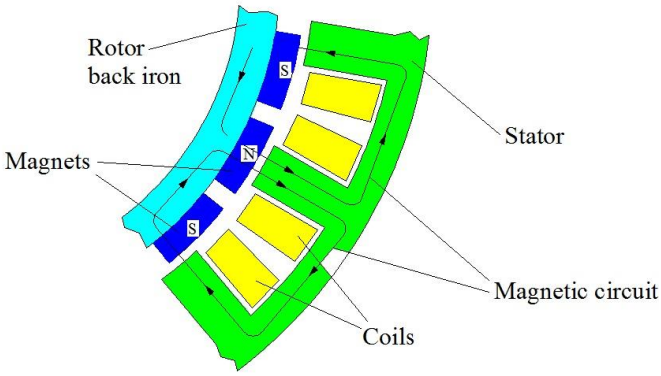

Conventional design

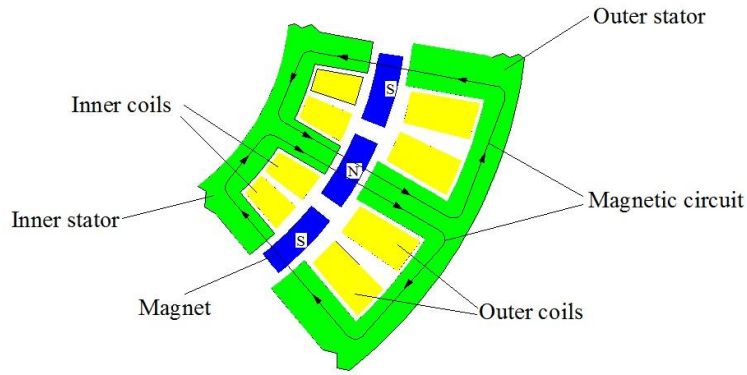

ATR design (patent pending)

In a conventional DDR motor design, a rotor back iron is necessary for the magnetic circuit to be closed. This rotor back iron adds to the rotating inertia of the motor. In fact, in many fast indexing applications, much of the motor torque is used to overcome the inertia of the motor itself, leaving little torque for the load. To increase motor torque, a motor with a larger diameter is selected. However, this results in higher rotor inertia, which in turn requires higher torque. The selection process results in an endless cycle with no optimal solution.

No magnet back iron

In our ATR design, no back iron is needed in the rotor. This reduces the rotor inertia significantly. Moreover, our design results in higher torque output. The combined features of higher torque and lower rotor inertia give the ATR excellent dynamic performance.

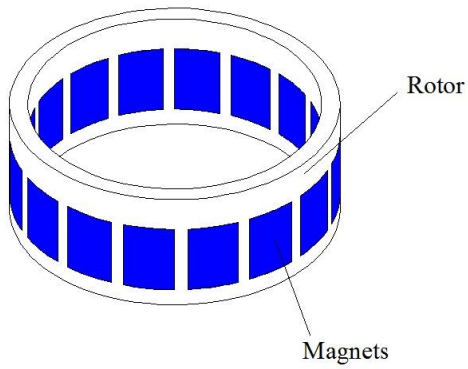

Rotor structure

The figure above shows our rotor structure design. The magnets are not attached to any back iron material but are mounted on the rotor structure, which is made of low density material with high stiffness.

■ ACW Series

The ACW series are using coreless technology. They are designed with very low profile, and the motors do not produce any cogging torque, which allows smooth motion to be achieved with low velocity ripple.

Comparison with other conventional DDR motors

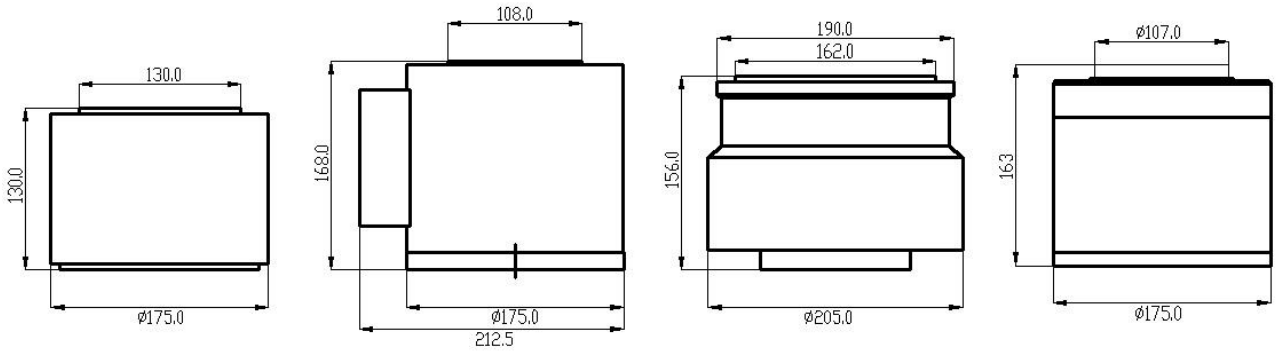

YA KM YG ATR175

Brand/Model	Unit	**Brand YA**	**Brand KM**	**Brand YG**	**Akribis ATR175**	**Our advantages**
Outer Diameter	mm	175.0	175.2	190.0 (205.0)	175.0	Similar diameter
Motor Height	mm	130.0	168.0	156.0	163.0	Similar height
Peak Torque	Nm	42.0	51.5	30.0	101.8	Highest peak torque
Continuous Torque	Nm	14.0	19.7	Not published	33.9	Highest continuous torque
Max Speed (230 VAC)	rpm	300	498	120	664	Highest speed
Rotor Inertia	Kgm2	0.0220	0.0071	0.0720	0.0044	Lowest rotor inertia

The table above shows a comparison of the ATR with well-known conventional DDR motors from USA and Japan. The ATR175 has the best performance.

Excellent dynamic performance

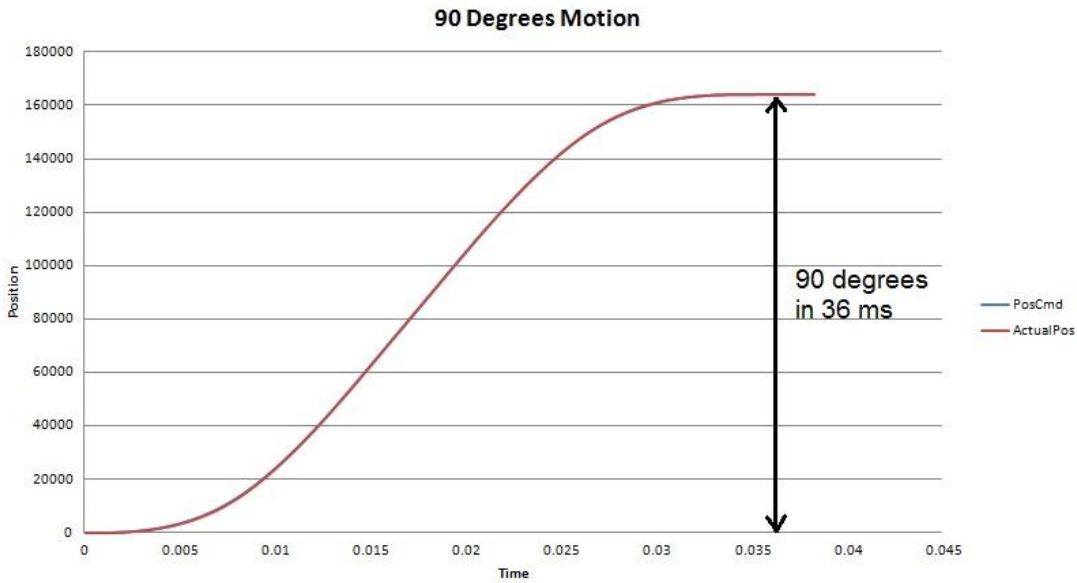

With high torque and low rotor inertia, the ATR is ideal for fast, indexing motion. The graph above shows a motion of 90 degrees, in just 36 ms, for ATR152 motor.

Factors to consider when choosing a DDR Motor

1. Peak torque and continuous torque

The torque ratings of a DDR motor must meet the torque requirements of the application. In other words, the peak torque and continuous torque of the motor must be higher than the peak torque and RMS (root mean square) torque of the application. Otherwise, the motor will not be able to accelerate as fast as needed, or the motor will over heat after some time.

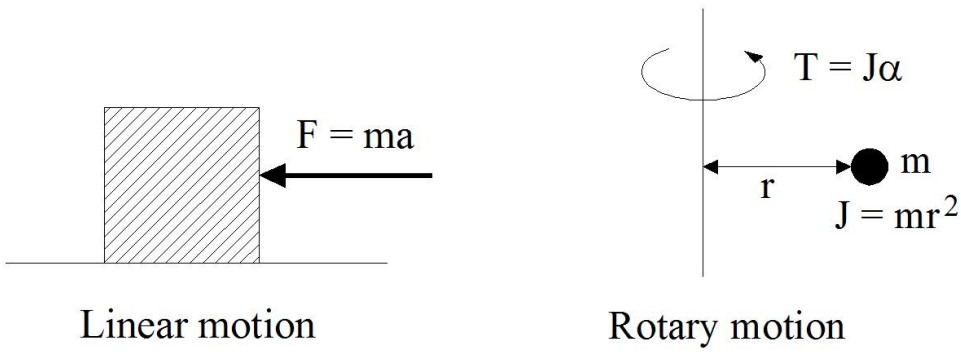

For linear motion, by Newton's second law, F = ma, where F is the force needed to move an object in N, m is the moving mass in Kg, a is the acceleration in m/s^2,

Similarly, for rotary motion, T = Jα, where T is the torque needed to rotate an object in Nm, J is the moment of inertia in Kgm^2, and α is the angular acceleration, in radians/ s^2.

For an application, we can compute the peak torque and RMS torque required:

Peak torque during acceleration/deceleration, T = Jα

$$\text{RMS Torque} = \sqrt{\frac{Ta^2 * ta + Tc^2 * tc + Td^2 * td + Tw^2 * tw}{ta + tc + td + tw}}$$

where,

Ta = Acceleration torque	ta = Acceleration Time
Tc = Cruise torque	tc = Cruise Time
Td = Deceleration torque	td = Deceleration Time
Tw = Dwell torque	tw = Dwell Time

A motor should be selected based on the computed peak torque and RMS torque required. A safety factor of 20-30% may be used, especially if friction and external oppcsing torque are assumed to be zero in the calculation.

Akribis provides motor selection software, where the peak torque and RMS torque are computed automatically, and a motor is recommended, after you key in the application parameters.

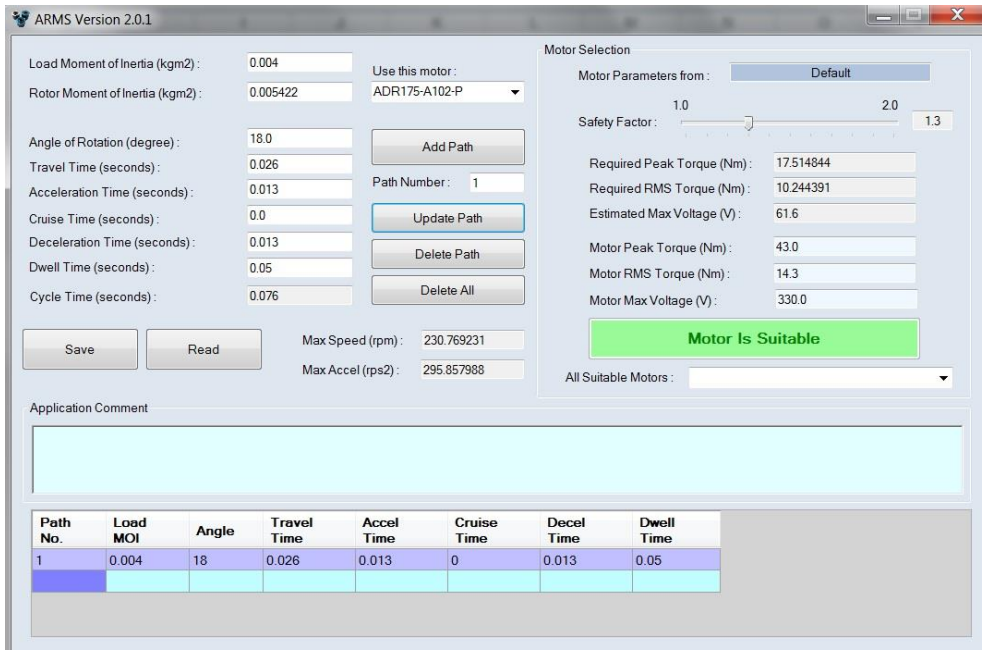

Akribis DDR motors are designed with very high torque density, providing higher peak torque and continuous torque compared to conventional designs.

2. Motor inertia - the smaller the better

In the torque equation, , $T = J\alpha$, much higher acceleration can be achieved if the moment of inertia is smaller. The moment of inertia used in the computation actually comprises 2 parts: the moment of inertia of the motor, and the moment of inertia of the load.

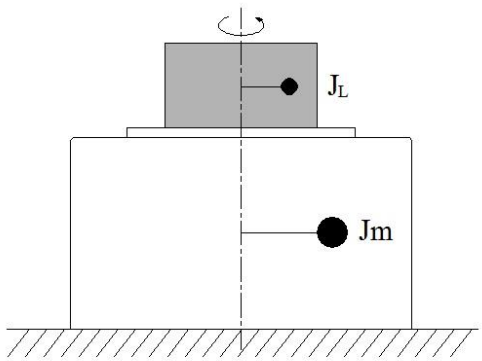

Illustration of motor inertia and load inertia

$\mathbf{J = J_m + J_L}$

In many cases, the moment of inertia of the motor actually contributes a large percentage of the total moment of inertia. This means that the motor torque is used mainly to rotate itself. Little torque is left for the load moment of inertia.

This often creates a dilemma for design engineers. The objective is to achieve a higher target performance, with higher acceleration, to reduce cycle time. Hence, higher torque is needed. In order to get higher torque, the engineer selects a bigger motor with larger torque ratings. However, the bigger motor also comes with a larger motor inertia, and this result in having higher torque requirements. The bigger motor may not meet the objective of achieving higher target performance after all.

Therefore, a DDR motor with a smaller moment of inertia is an advantage. It should be noted that DDR motors using an outer rotor design will naturally have much higher motor inertia.

Akribis ADR-A series motors are designed with optimal moment of inertia. The torque density to motor inertia ratio is excellent. On the other hand, the ATR series is a special, patent pending design that has the lowest moment of inertia, while giving the highest torque.

3. Must the motor moment of inertia be matched to the load inertia?

When using conventional servo motors with mechanical transmission systems, it is a common practice to match the motor inertia to the load inertia. Ratios of 1:5, or up to 1:10 are used. For DDR motors, it is not necessary to match the motor inertia to the load inertia.

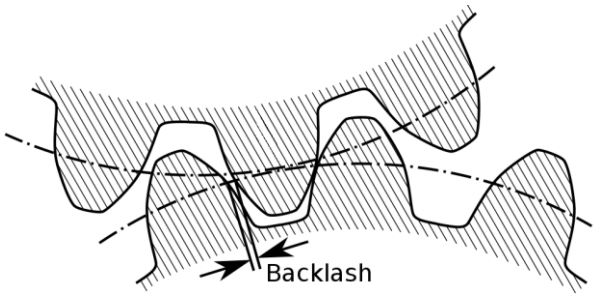

In conventional servo motor applications, mechanical transmissions such as belts, pulleys, rack and pinion etc introduce backlash. Hence, during very small rapid motions when reversing direction of motion, the load may be decoupled from the motor for a short period of time. This creates instability in the control system. Inertia matching is used to solve this problem, so that the controller can operate in a stable manner.

In a DDR application, the load is directly coupled to the motor without any transmission device, so there is no backlash. Consequently, there is no need for inertia matching.

4. Cogging or detent torque

DDR motors with teeth on the iron core laminations will have a cogging effect. The figure below illustrates cogging torque caused by the attraction force between the stator teeth and the magnets.

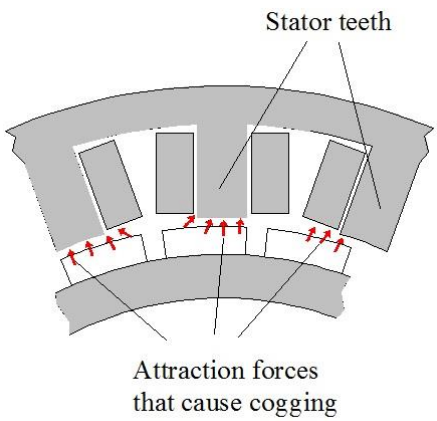

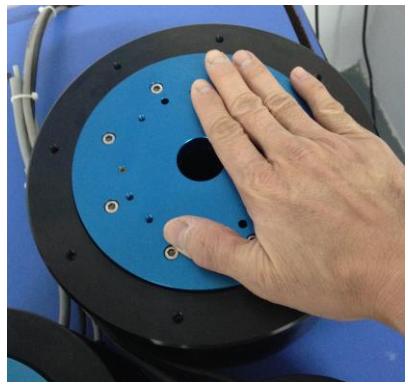

Rotate motor by hand to feel cogging effect

Cogging torque can be felt when you try to rotate a motor with your hand. You will feel some opposing force at certain positions.

The disadvantage of cogging torque is that it causes torque ripple during motion, which causes velocity ripple as well. Motion controllers can compensate the effect to a certain extent, but for slow speed applications where constant velocity is required, the effect of cogging will be detrimental.

Another disadvantage of cogging is that it affects motion settling performance, and jittering at target position.

Akribis ADR and ATR series motors are designed with minimal cogging torque, due to the optimized slot/pole configuration, and the introduction of tooth tips in the stator laminations. The maximum cogging torque, peak to peak is published in our data specifications.

The ACD and ACW series motors are using coreless design, which means that they do not have any cogging torque.

5. Maximum speed

In fast indexing applications, very high peak speeds may be reached during motion. It is therefore important to consider the type of windings required for the application, and ensure that the bus voltage from the amplifier is sufficient to overcome the back EMF voltage.

To put it simply, the bus voltage should be greater than the sum of the voltage generated by the back EMF, and the peak current multiplied by the terminal resistance of the motor:

V > (Kv * Speed + Ip * R)

where
V is the bus voltage
Kv is the back EMF constant of the motor
Ip is the peak current
R is the terminal resistance of the motor

Akribis DDR motors typically provide 2 types of windings to cater for different speed and voltage requirements. Series winding is suitable for lower current, higher voltage type of drive electronics, while parallel winding is suitable for higher current, lower voltage type of drive electronics. Users should select the type of winding that allows the maximum speed of the application to be achieved, with matching drive electronics based on the current and voltage supply.

6. Axial and radial run out

The axial and radial run out of a DDR motor is determined by the precision of the bearing used, precision of the machined components and the assembly of the components. The axial and radial run out need to be considered for applications that require higher accuracy.

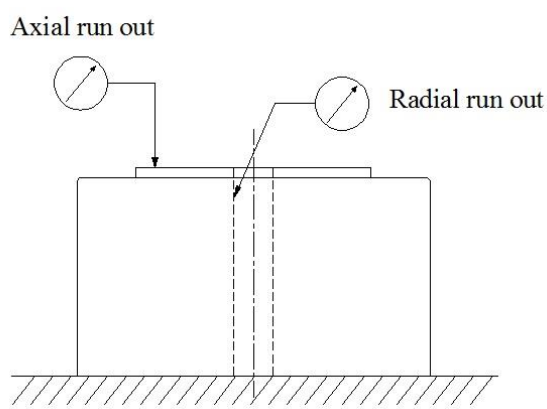

The method of measuring run out is illustrated in the diagram above.

The axial and radial run out of Akribis DDR motors are shown in the specifications sheet. For standard motors, the normal axial and radial run out is shown, with higher grade options available for selection.

7. Feedback

Akribis DDR motors typically use optical incremental encoders for feedback. However, other options are available, such as resolvers, absolute encoders and inductive encoders.

Optical encoders provide much better accuracy and higher resolution, compared to resolvers. For Akribis DDR motors, the grating pitch of the optical encoders is typically 20 microns, regardless of the diameter of the motor. With interpolation, this allows us to achieve very high encoder resolution, required for precision applications. For example, for ADR135, there are 12,000 lines per revolution, with a grating pitch of 20 microns. The standard interpolation rate is 40X, which gives us a resolution of 480,000 counts per revolution, or 0.5 microns at the grating diameter. By using SINCOS option, and interpolation of 4,096, we can achieve a resolution of 49,152,000 counts per revolution, or about 5 nm at the grating diameter.

ADR-A Series

Direct Drive Rotary Motor

- **Direct drive, brushless motor fully integrated with encoder and bearing**
- **Low cogging torque**
- **Low speed and high speed windings**
- **Precise homing through index pulse**

ADR110 Specifications		ADR110-A75		ADR110-A98	
Model	**Units**	**S**	**P**	**S**	**P**
Table diameter	mm	110		110	
Table height	mm	75		98	
Number of poles		16		16	
Continuous torque	Nm	1.9	1.9	4.2	4.2
Peak torque	Nm	5.8	5.8	12.6	12.6
Max. cogging torque (peak to peak)	Nm	0.0024	0.0024	0.0049	0.0049
Torque constant	Nm/Arms	0.65	0.32	1.40	0.70
Back EMF constant	Vpeak/rpm	0.055	0.028	0.119	0.060
Continuous current	Arms	3.0	6.0	3.0	6.0
Peak current	Arms	9.0	18.0	9.0	18.0
Resistance [1]	ohms	3.20	0.80	4.90	1.21
Inductance [1]	mH	17.15	4.29	26.26	6.49
Electrical time constant	ms	5.36	5.36	5.36	5.36
Motor constant	Nm/SqRt(W)	0.36	0.36	0.63	0.63
Mass	Kg	2.90	2.90	3.20	3.20
Rotor Inertia	Kgm2	0.0003086	0.0003086	0.0004419	0.0004419
Rec. max speed @230V AC	rpm	4,887	10,294	2,146	4,665
MS-12000 optical SINCOS encoder	lines	12,000	12,000	12,000	12,000
MS-12000 optical digital encoder (40X)	Counts/rev	480,000	480,000	480,000	480,000
Accuracy (based on MS-12000, 40X)	arc sec	+/-20	+/-20	+/-20	+/-20
Repeatability (based on MS-12000, 40X)	arc sec	+/-2.7	+/-2.7	+/-2.7	+/-2.7
Axial / Radial runout	um	15 (10,5) [2]			
Max axial load	N	700		700	
Max moment load	Nm	20		20	

ADR135 Specifications		ADR135-A90		ADR135-A115	
Model	**Units**	**S**	**P**	**S**	**P**
Table diameter	mm	135		135	
Table height	mm	90		115	
Number of poles		16		16	
Continuous torque	Nm	5.2	5.2	11.0	11.0
Peak torque	Nm	15.5	15.5	32.9	32.9
Max. cogging torque (peak to peak)	Nm	0.010	0.010	0.022	0.022
Torque constant	Nm/Arms	1.72	0.86	3.66	1.83
Back EMF constant	Vpeak/rpm	0.147	0.074	0.313	0.156
Continuous current	Arms	3.0	6.0	3.0	6.0
Peak current	Arms	9.0	18.0	9.0	18.0
Resistance [1]	ohms	6.60	1.65	10.70	2.70
Inductance [1]	mH	45.30	11.20	72.76	18.63
Electrical time constant	ms	6.86	6.79	6.80	6.90
Motor constant	Nm/SqRt(W)	0.67	0.67	1.12	1.11
Mass	Kg	4.80	4.80	4.90	4.90
Rotor Inertia	Kgm2	0.000992	0.000992	0.001332	0.001332
Rec. max speed @230V AC	rpm	1,636	3,676	651	1,608
MS-12000 optical SINCOS encoder	lines	12,000	12,000	12,000	12,000
MS-12000 optical digital encoder (40X)	Counts/rev	480,000	480,000	480,000	480,000
Accuracy (based on MS-12000, 40X)	arc sec	+/-20	+/-20	+/-20	+/-20
Repeatability (based on MS-12000, 40X)	arc sec	+/-2.7	+/-2.7	+/-2.7	+/-2.7
Axial / Radial runout	um	15 (10,5) [2]			
Max axial load	N	1,050		1,050	
Max moment load	Nm	35		45	

1. Terminal to terminal, at 25 Deg C.
2. Optional.

ADR175 Specifications		ADR175-A102		ADR175-A138	
Model	**Units**	**S**	**P**	**S**	**P**
Table diameter	mm	175		175	
Table height	mm	102		138	
Number of poles		16		16	
Continuous torque	Nm	15.7	15.7	32.9	32.9
Peak torque	Nm	47.2	47.2	98.6	98.6
Max. cogging torque (peak to peak)	Nm	0.094	0.094	0.197	0.197
Torque constant	Nm/Arms	3.93	1.97	8.22	4.11
Back EMF constant	Vpeak/rpm	0.336	0.168	0.703	0.351
Continuous current	Arms	4.0	8.0	4.0	8.0
Peak current	Arms	12.0	24.0	12.0	24.0
Resistance [1]	ohms	5.27	1.30	8.30	2.13
Inductance [1]	mH	45.72	11.27	72.00	18.51
Electrical time constant	ms	8.67	8.67	8.67	8.67
Motor constant	Nm/SqRt(W)	1.71	1.72	2.85	2.81
Mass	Kg	8.5	8.5	12.7	12.7
Rotor Inertia	Kgm2	0.005422	0.005422	0.007621	0.007621
Rec. max speed @230V AC	rpm	704	1,600	285	708
MS-16384 optical SINCOS encoder	lines	16,384	16,384	16,384	16,384
MS-16384 optical digital encoder (40X)	Counts/rev	655,360	655,360	655,360	655,360
Accuracy (based on MS-16384, 40X)	arc sec	+/-25	+/-25	+/-25	+/-25
Repeatability (based on MS-16384, 40X)	arc sec	+/-2.0	+/-2.0	+/-2.0	+/-2.0
Axial / Radial runout	um	20 (15,10) [2]			
Max axial load	N	2,310		2,310	
Max moment load	Nm	53		63	

ADR220 Specifications		ADR220-A120		ADR220-A165	
Model	**Units**	**S**	**P**	**S**	**P**
Table diameter	mm	220		220	
Table height	mm	120		165	
Number of poles		24		24	
Continuous torque	Nm	46.0	46.0	94.9	94.9
Peak torque	Nm	137.9	137.9	284.6	284.6
Max. cogging torque (peak to peak)	Nm	0.357	0.357	0.736	0.736
Torque constant	Nm/Arms	8.51	2.84	17.57	5.86
Back EMF constant	Vpeak/rpm	0.728	0.243	1.502	0.501
Continuous current	Arms	5.40	16.20	5.40	16.20
Peak current	Arms	16.20	48.60	16.20	48.60
Resistance [1]	ohms	5.87	0.74	10.32	1.20
Inductance [1]	mH	53.60	6.30	106.70	11.90
Electrical time constant	ms	9.13	8.51	10.34	9.92
Motor constant	Nm/SqRt(W)	3.51	3.30	5.47	5.35
Mass	Kg	18.3	18.3	24.1	24.1
Rotor Inertia	Kgm2	0.017858	0.017858	0.025216	0.025216
Rec. max speed @230V AC	rpm	282	1,089	88	483
MS-16384 optical SINCOS encoder	lines	16,384	16,384	16,384	16,384
MS-16384 optical digital encoder (40X)	Counts/rev	655,360	655,360	655,360	655,360
Accuracy (based on MS-16384, 40X)	arc sec	+/-25	+/-25	+/-25	+/-25
Repeatability (based on MS-16384, 40X)	arc sec	+/-2.0	+/-2.0	+/-2.0	+/-2.0
Axial / Radial runout	um	25 (10) [2]			
Max axial load	N	2,800		2,800	
Max moment load	Nm	72		95	

1. Terminal to terminal, at 25 Deg C.
2. Optional.

ADR360 Specifications		ADR360-A150		ADR360-A215	
Model	**Units**	**S**	**P**	**S**	**P**
Table diameter	mm	360		360	
Table height	mm	150		215	
Number of poles		32		32	
Continuous torque	Nm	184.8	184.8	377.9	377.9
Peak torque	Nm	554.5	554.5	1133.8	1133.8
Max. cogging torque (peak to peak)	Nm	1.98	1.98	4.09	4.09
Torque constant	Nm/Arms	18.48	9.24	37.79	18.90
Back EMF constant	Vpeak/rpm	1.580	0.790	3.231	1.616
Continuous current	Arms	10.00	20.00	10.00	20.00
Peak current	Arms	30.00	60.00	30.00	60.00
Resistance [1]	ohms	3.05	0.76	5.26	1.25
Inductance [1]	mH	31.70	7.92	54.74	13.00
Electrical time constant	ms	10.40	10.40	10.40	10.40
Motor constant	Nm/SqRt(W)	10.59	10.59	16.47	16.90
Mass	Kg	56.0	56.0	71.0	71.0
Rotor Inertia	Kgm2	0.204636	0.204636	0.322304	0.322304
Rec. max speed @230V AC	rpm	132	322	44	139
Rec. max speed @415V AC	rpm	314	685	133	317
MS-23049 optical SINCOS encoder	lines	23,049	23,049	23,049	23,049
MS-23049 optical digital encoder (40X)	Counts/rev	921,960	921,960	921,960	921,960
Accuracy (based on MS-23049, 40X)	arc sec	+/-30	+/-30	+/-30	+/-30
Repeatability (based on MS-23049, 40X)	arc sec	+/-1.5	+/-1.5	+/-1.5	+/-1.5
Axial / Radial runout	um	40 (15) [2]			
Max axial load	N	11,200		11,200	
Max moment load	Nm	245		245	

1. Terminal to terminal, at 25 Deg C.

2. Optional.

ADR110-A75

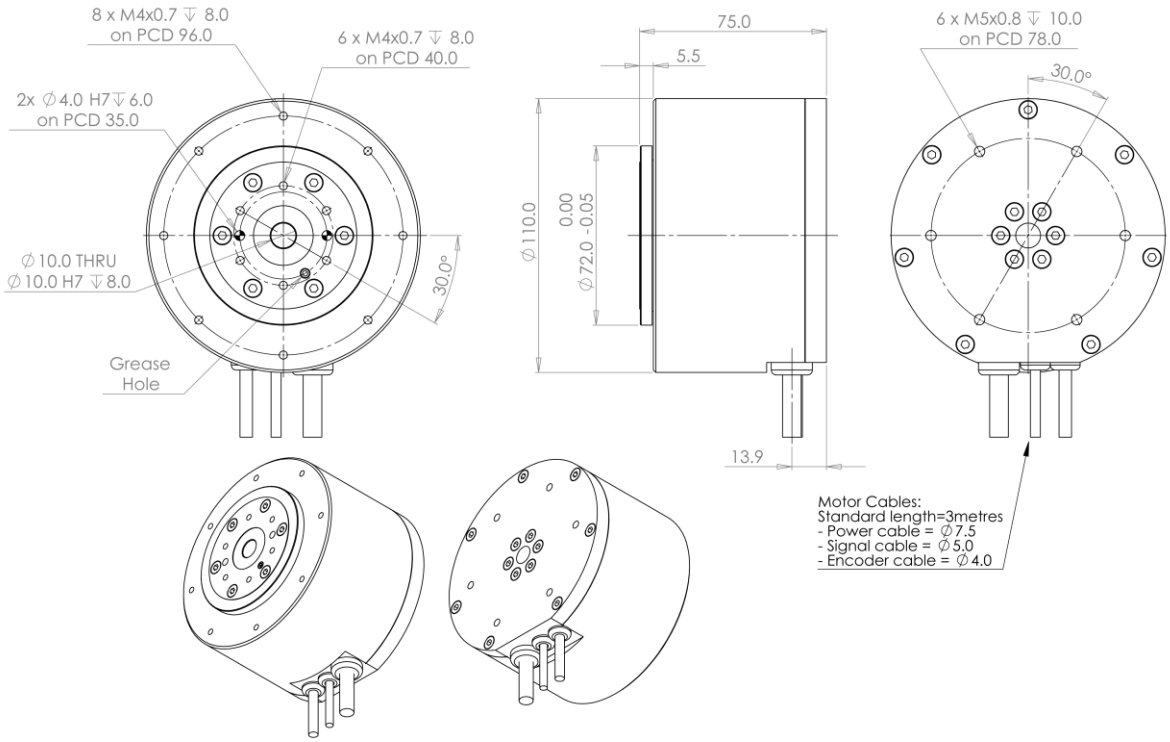

ADR110-A98

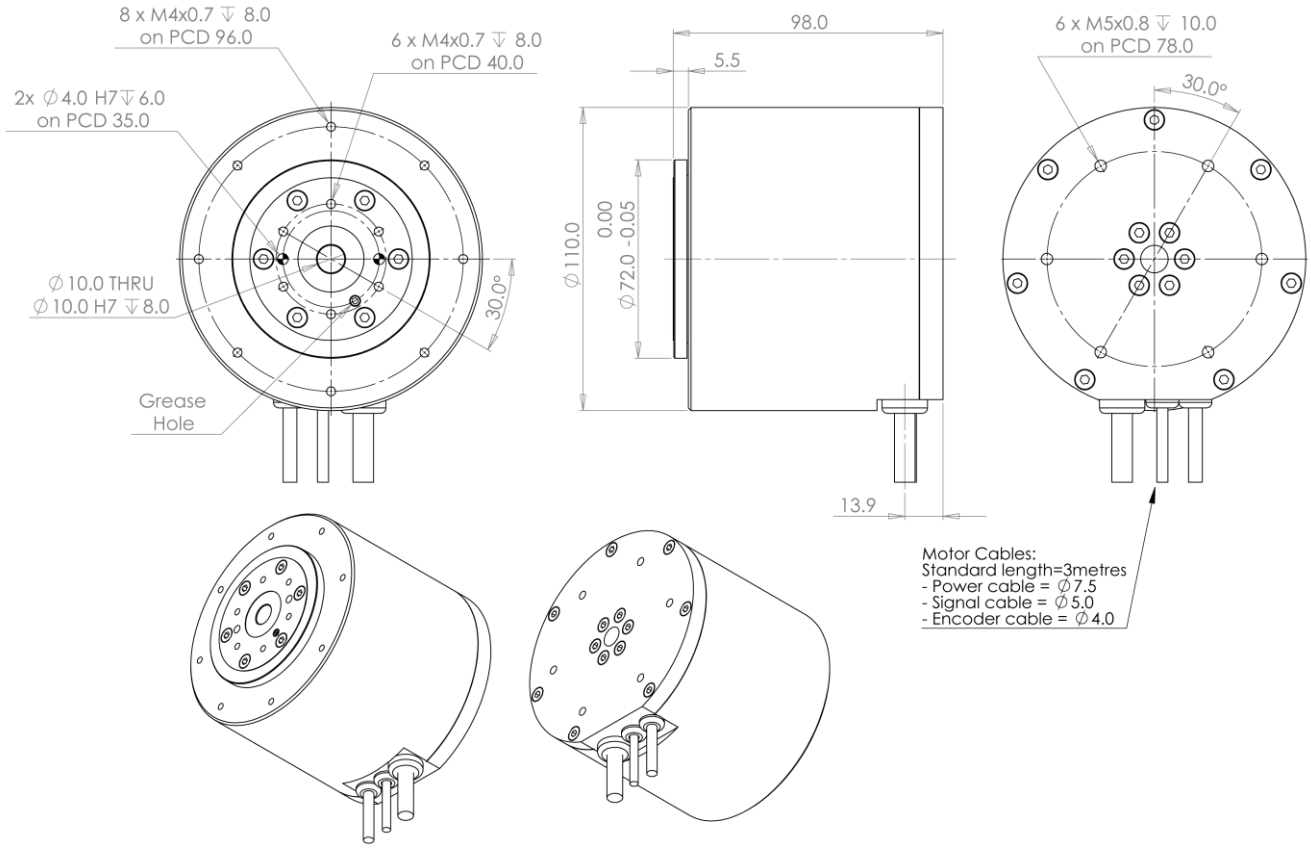

ADR135-A90

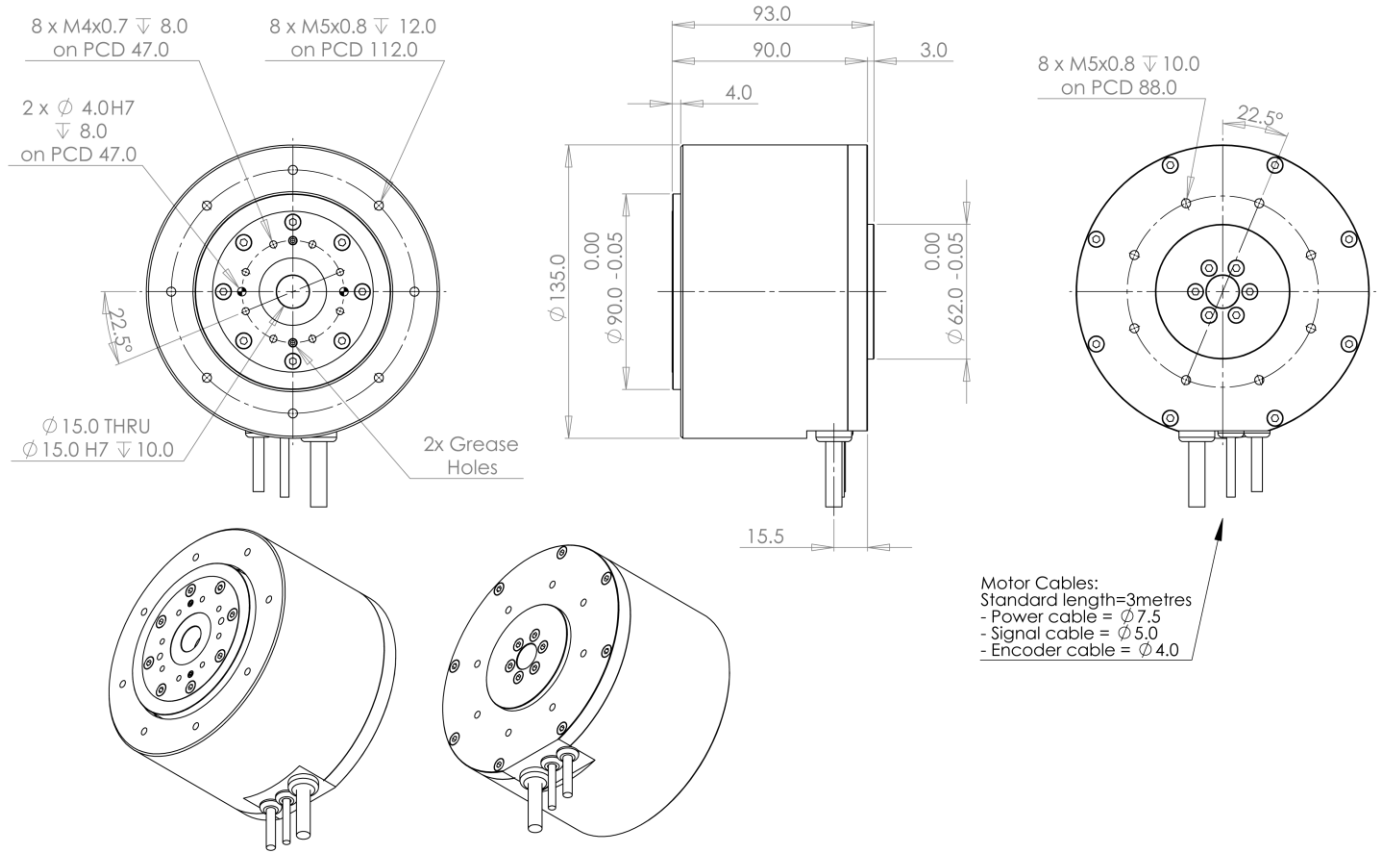

ADR135-A115

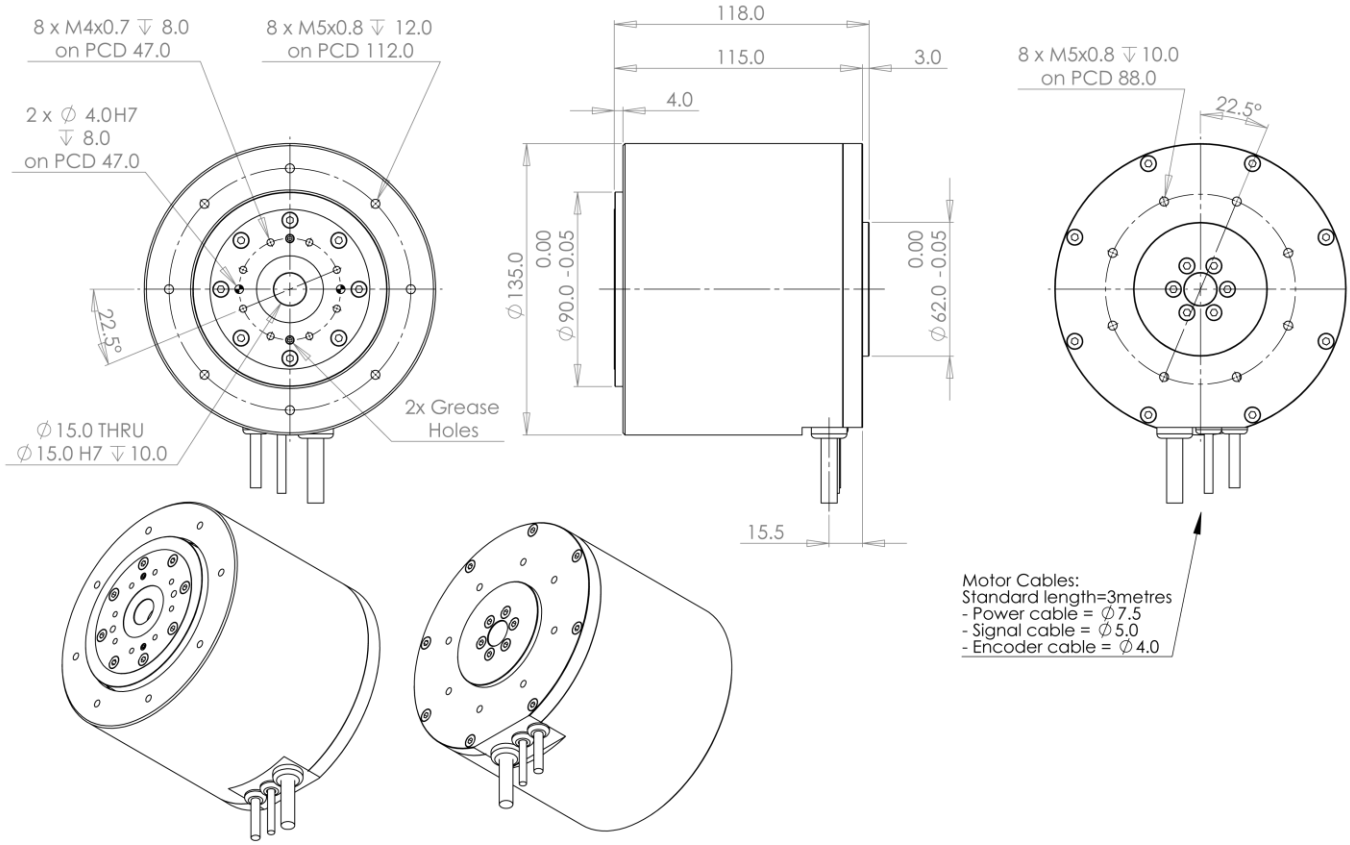

ADR175-A102

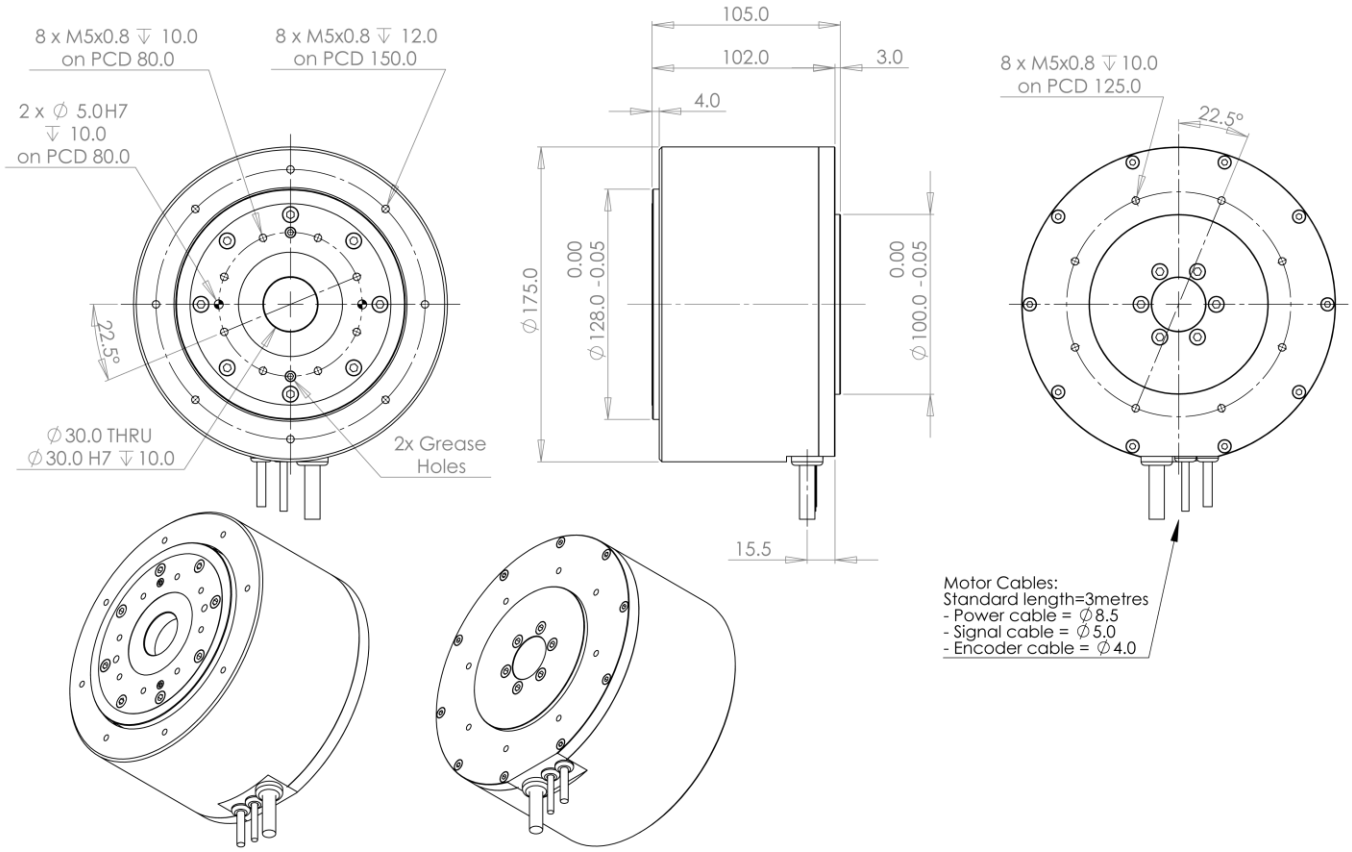

ADR175-A138

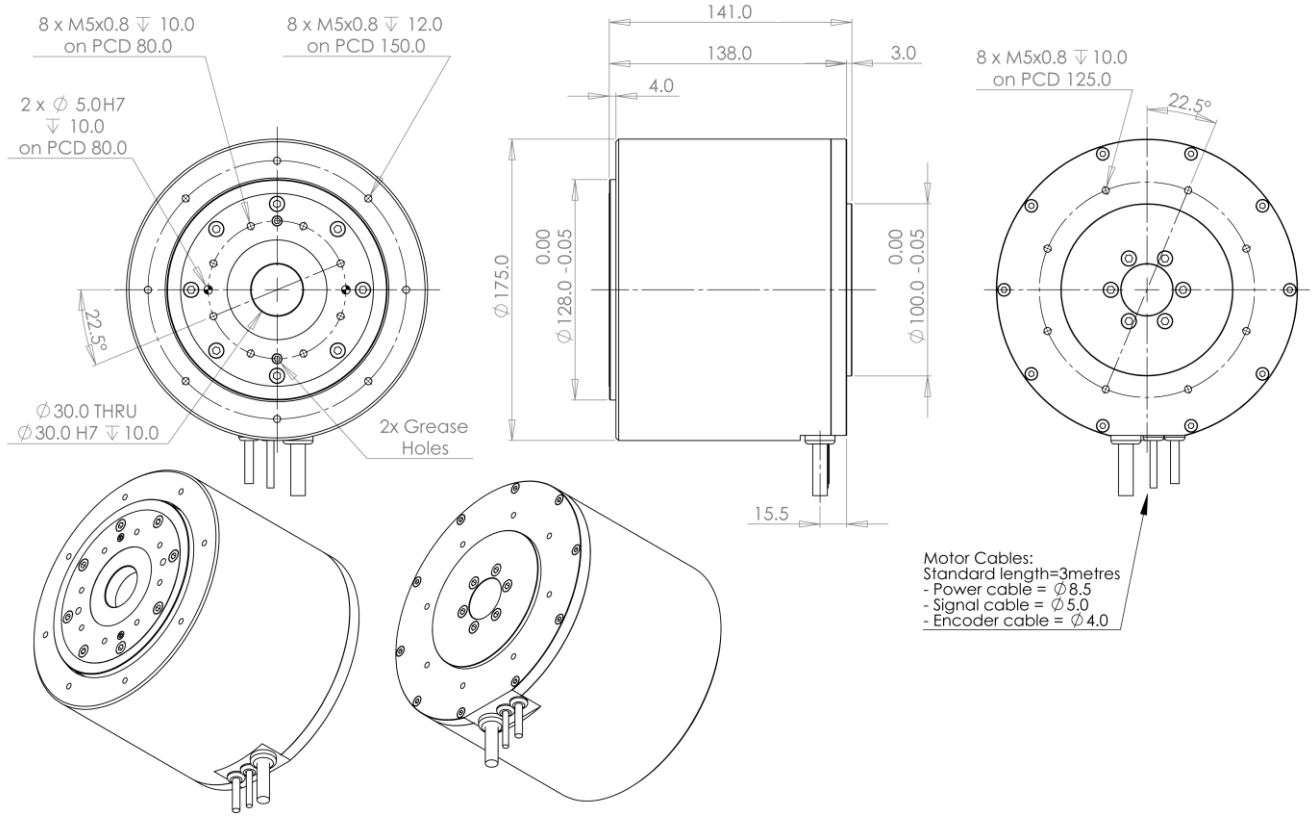

ADR220-A120

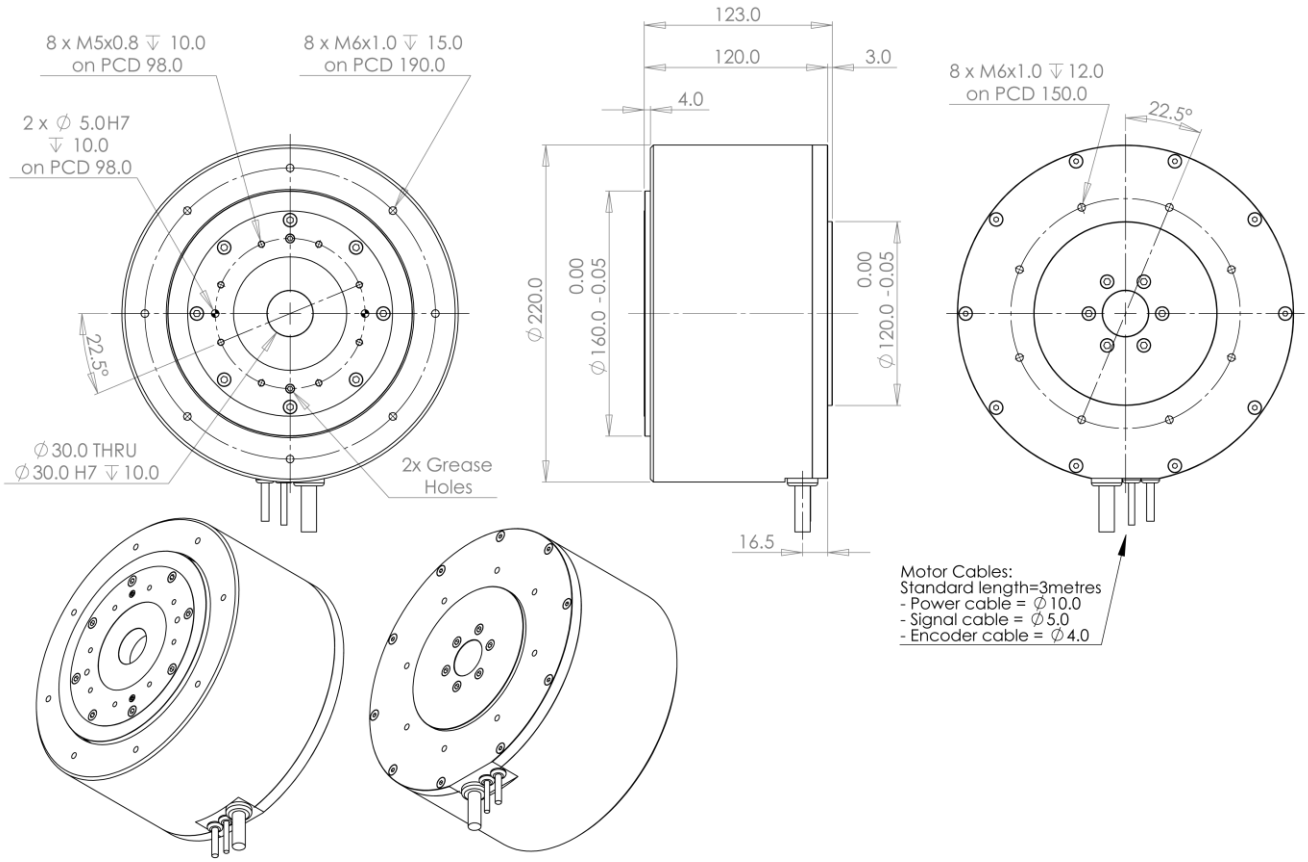

ADR220-A165

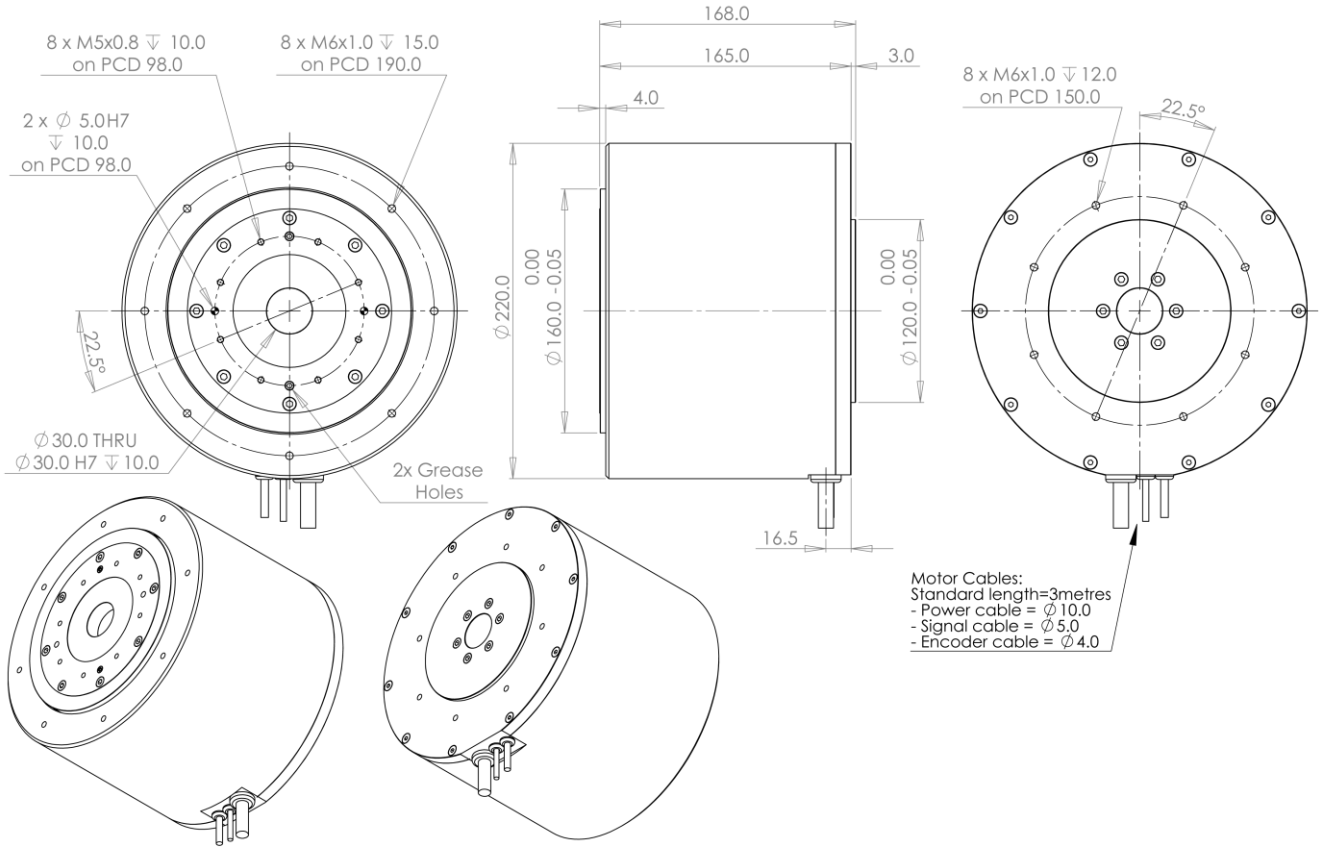

ADR360-A150

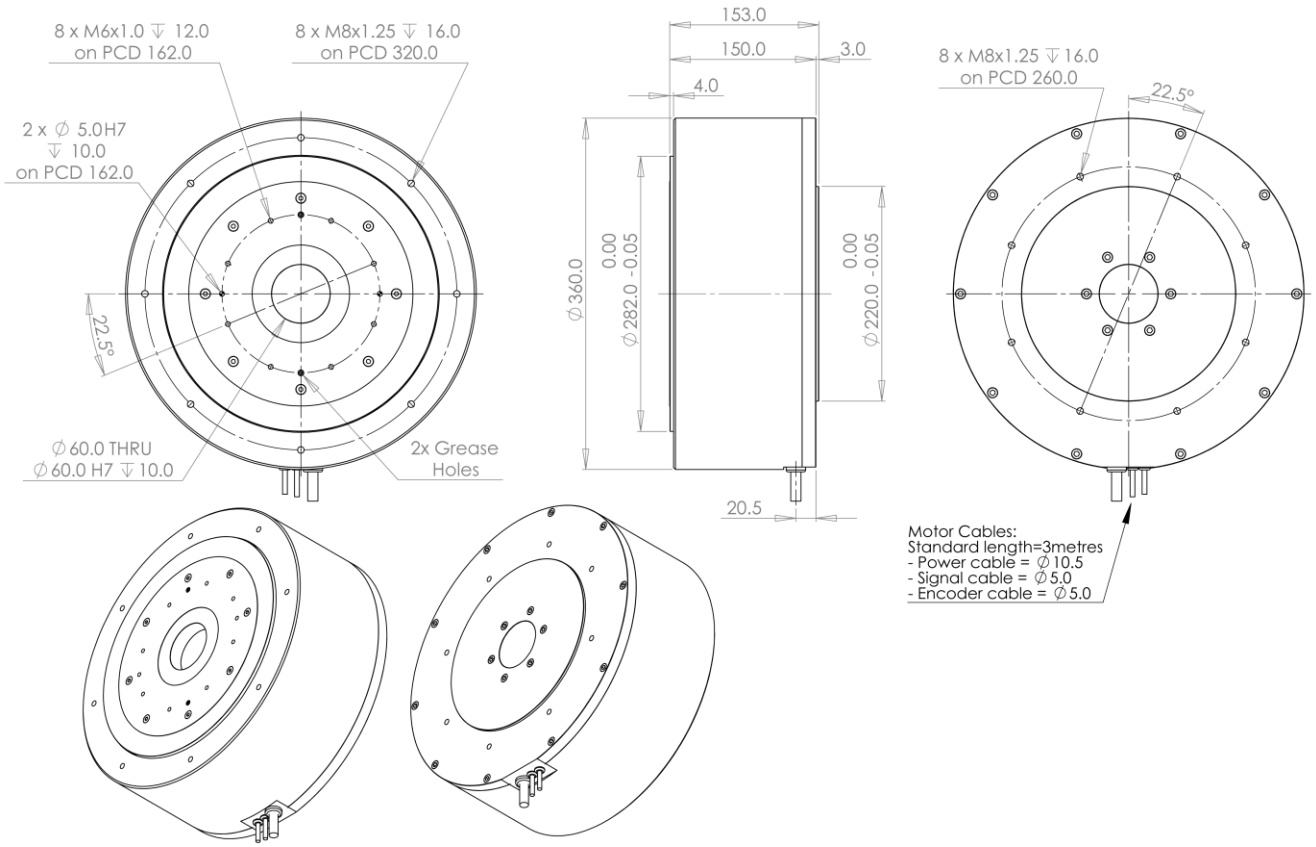

ADR360-A215

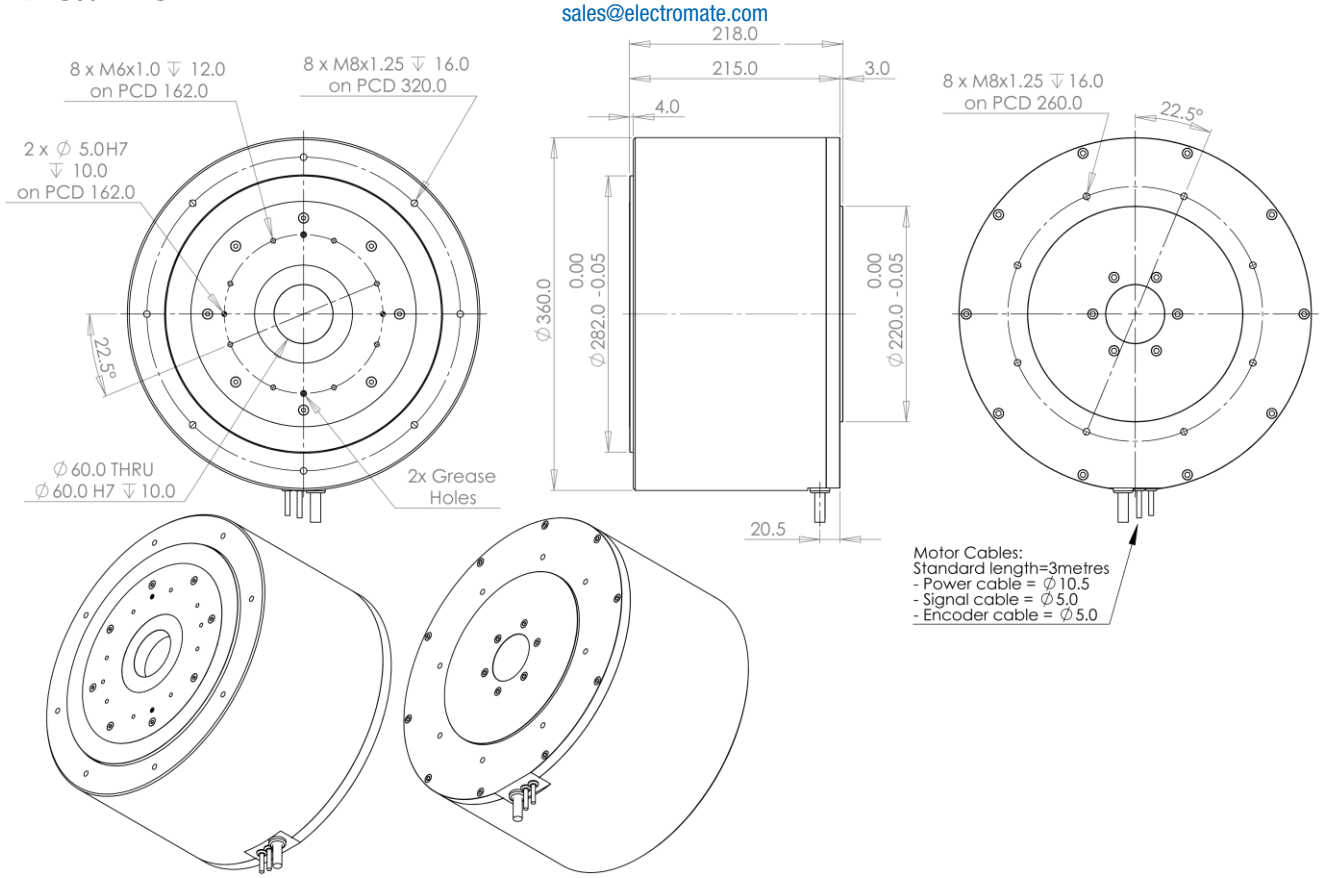

Part Numbering

Motor	Model	Winding	Thermal Sensor	Cable Length	Encoder Option	Interpolation Option	Runout
ADR110	A75/A98	S/P	J/K	3.0	MS-12000	SINCOS/40X	P15/P10/P5
ADR135	A90/A115						
ADR175	A102/A138				MS-16384		P20/P15/P10
ADR220	A120/A165						P25/P10
ADR360	A150/A215				MS-23049		P40/P15

P20 = Axial Runout 20um, Radial Runout is 20um

P15 = Axial Runout 15um, Radial Runout is 15um

P10 = Axial Runout 10um, Radial Runout is 10um

P5 = Axial Runout 5um, Radial Runout is 5um

J- Thermostat

K- PT100 (RTD)

Example: ADR175-A138-S-J-3.0-MS-16384-40X-P10

Connector Pin Assignment

ADR-A

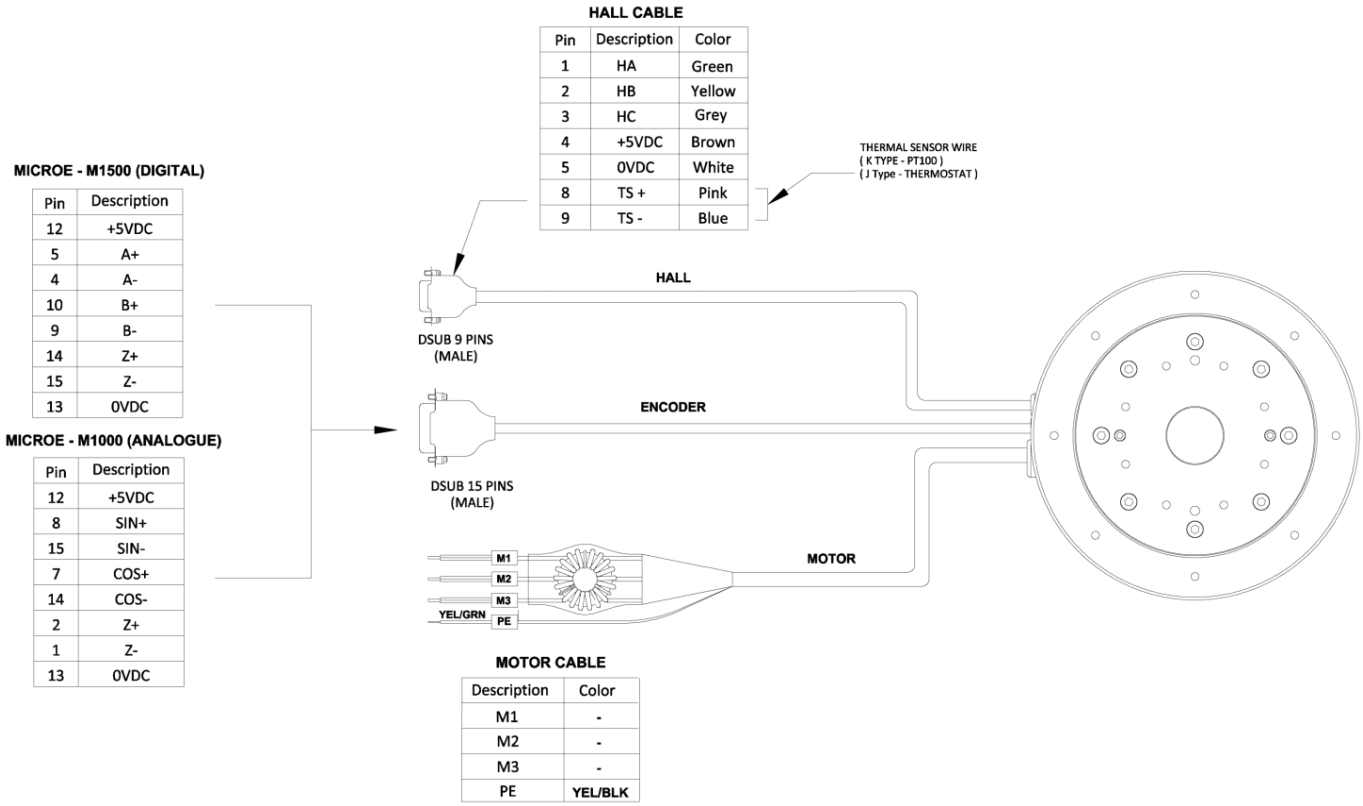

ADR-B Series

Direct Drive Rotary Motor

- **Direct drive, brushless motor fully integrated with encoder and bearing**
- **Low cogging torque**
- **Low speed and high speed windings**
- **Precise homing through index pulse**
- **Large centre hole**

ADR110 Specifications		ADR110-B113		ADR110-B136	
Model	**Units**	**S**	**P**	**S**	**P**
Table diameter	mm	110		110	
Table height	mm	113		136	
Number of poles		16		16	
Continuous torque	Nm	1.9	1.9	4.2	4.2
Peak torque	Nm	5.8	5.8	12.6	12.6
Max. cogging torque (peak to peak)	Nm	0.0024	0.0024	0.0049	0.0049
Torque constant	Nm/Arms	0.65	0.32	1.40	0.70
Back EMF constant	Vpeak/rpm	0.055	0.028	0.119	0.060
Continuous current	Arms	3.0	6.0	3.0	6.0
Peak current	Arms	9.0	18.0	9.0	18.0
Resistance [1]	ohms	3.20	0.80	4.90	1.21
Inductance [1]	mH	17.15	4.29	26.26	6.49
Electrical time constant	ms	5.36	5.36	5.36	5.36
Motor constant	Nm/SqRt(W)	0.36	0.36	0.63	0.63
Mass	Kg	3.20	3.20	4.60	4.60
Rotor Inertia	Kgm2	0.0003086	0.0003086	0.0004419	0.0004419
Rec. max speed @230V AC	rpm	4,887	10,294	2,146	4,665
Encoder poles per revolution	poles	122			
Encoder resolution with 32,768 X interpolation	Counts/rev	3,997,696			
Repeatability (based on 32,768 X)	arc sec	+/-0.4			
Axial / Radial runout	um	15			

ADR135 Specifications		ADR135-B121		ADR135-B148	
Model	**Units**	**S**	**P**	**S**	**P**
Table diameter	mm	135		135	
Table height	mm	121		148	
Number of poles		16		16	
Continuous torque	Nm	5.2	5.2	11.0	11.0
Peak torque	Nm	15.5	15.5	32.9	32.9
Max. cogging torque (peak to peak)	Nm	0.010	0.010	0.022	0.022
Torque constant	Nm/Arms	1.72	0.86	3.66	1.83
Back EMF constant	Vpeak/rpm	0.147	0.074	0.313	0.156
Continuous current	Arms	3.0	6.0	3.0	6.0
Peak current	Arms	9.0	18.0	9.0	18.0
Resistance [1]	ohms	6.60	1.65	10.70	2.70
Inductance [1]	mH	45.30	11.20	72.76	18.63
Electrical time constant	ms	6.86	6.79	6.80	6.90
Motor constant	Nm/SqRt(W)	0.67	0.67	1.12	1.11
Mass	Kg	3.90	3.90	5.70	5.70
Rotor Inertia	Kgm2	0.000992	0.000992	0.001332	0.001332
Rec. max speed @230V AC	rpm	1,636	3,676	651	1,608
Encoder poles per revolution	poles	180			
Encoder resolution with 32,768 X interpolation	Counts/rev	5,898,240			
Repeatability (based on 32,768 X)	arc sec	+/-0.3			
Axial / Radial runout	um	15			

1. Terminal to terminal, at 25 Deg C.

ADR175 Specifications		ADR175-B143		ADR175-B180	
Model	**Units**	**S**	**P**	**S**	**P**
Table diameter	mm	175		175	
Table height	mm	143		180	
Number of poles		16		16	
Continuous torque	Nm	15.7	15.7	32.9	32.9
Peak torque	Nm	47.2	47.2	98.6	98.6
Max. cogging torque (peak to peak)	Nm	0.094	0.094	0.197	0.197
Torque constant	Nm/Arms	3.93	1.97	8.22	4.11
Back EMF constant	Vpeak/rpm	0.336	0.168	0.703	0.351
Continuous current	Arms	4.0	8.0	4.0	8.0
Peak current	Arms	12.0	24.0	12.0	24.0
Resistance [1]	ohms	5.27	1.30	8.30	2.13
Inductance [1]	mH	45.72	11.27	72.00	18.51
Electrical time constant	ms	8.67	8.67	8.67	8.67
Motor constant	Nm/SqRt(W)	1.71	1.72	2.85	2.81
Mass	Kg	10.0	10.0	11.6	11.6
Rotor Inertia	Kgm2	0.005422	0.005422	0.007621	0.007621
Rec. max speed @230V AC	rpm	704	1,600	285	708
Encoder poles per revolution	poles	300			
Encoder resolution with 32,768 X interpolation	Counts/rev	9,830,400			
Repeatability (based on 32,768 X)	arc sec	+/-0.2			
Axial / Radial runout	um	20			

ADR220 Specifications		ADR220-B167		ADR220-B217	
Model	**Units**	**S**	**P**	**S**	**P**
Table diameter	mm	220		220	
Table height	mm	167		217	
Number of poles		24		24	
Continuous torque	Nm	46.0	46.0	94.9	94.9
Peak torque	Nm	137.9	137.9	284.6	284.6
Max. cogging torque (peak to peak)	Nm	0.357	0.357	0.736	0.736
Torque constant	Nm/Arms	8.51	2.84	17.57	5.86
Back EMF constant	Vpeak/rpm	0.728	0.243	1.502	0.501
Continuous current	Arms	5.40	16.20	5.40	16.20
Peak current	Arms	16.20	48.60	16.20	48.60
Resistance [1]	ohms	5.87	0.74	10.32	1.20
Inductance [1]	mH	53.60	6.30	106.70	11.90
Electrical time constant	ms	9.13	8.51	10.34	9.92
Motor constant	Nm/SqRt(W)	3.51	3.30	5.47	5.35
Mass	Kg	15.6	15.6	23.4	23.4
Rotor Inertia	Kgm2	0.017858	0.017858	0.025216	0.025216
Rec. max speed @230V AC	rpm	282	1,089	88	483
Encoder poles per revolution	poles	300			
Encoder resolution with 32,768 X interpolation	Counts/rev	9,830,400			
Repeatability (based on 32,768 X)	arc sec	+/-0.2			
Axial / Radial runout	um	25			

1. Terminal to terminal, at 25 Deg C.

ADR110-B113

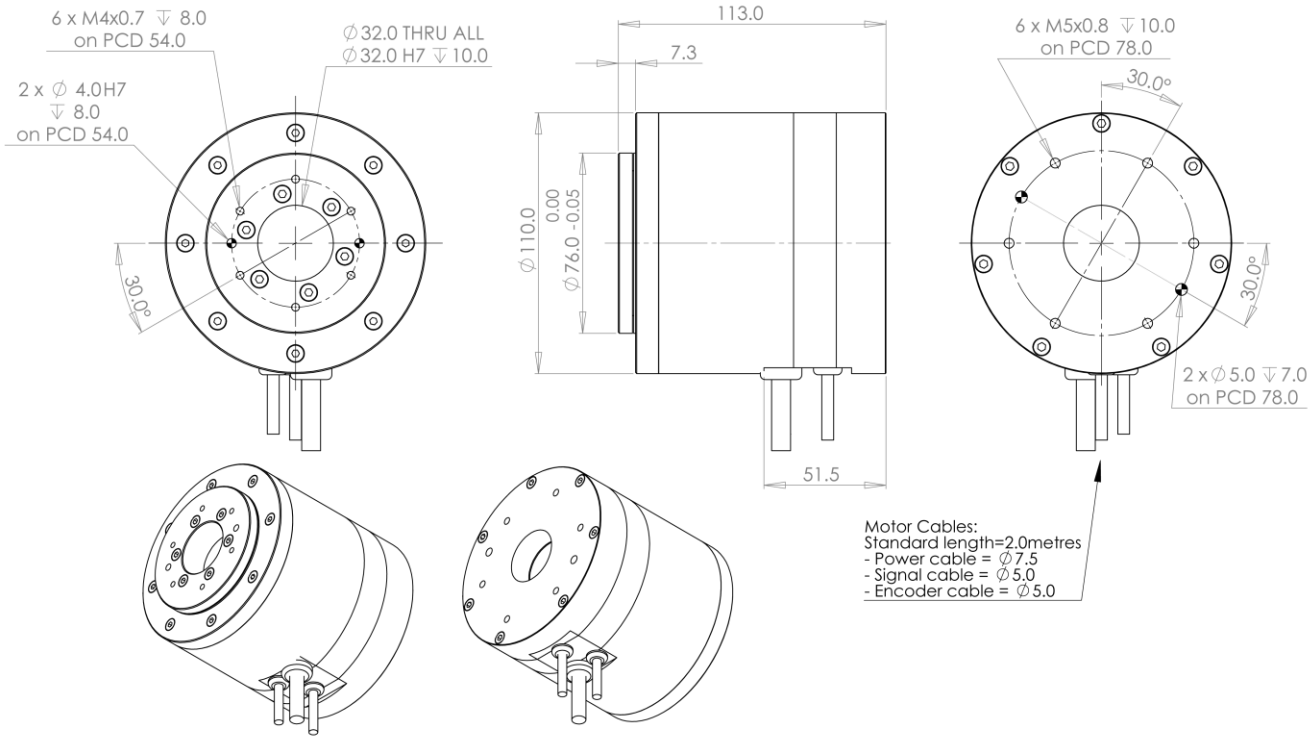

ADR110-B136

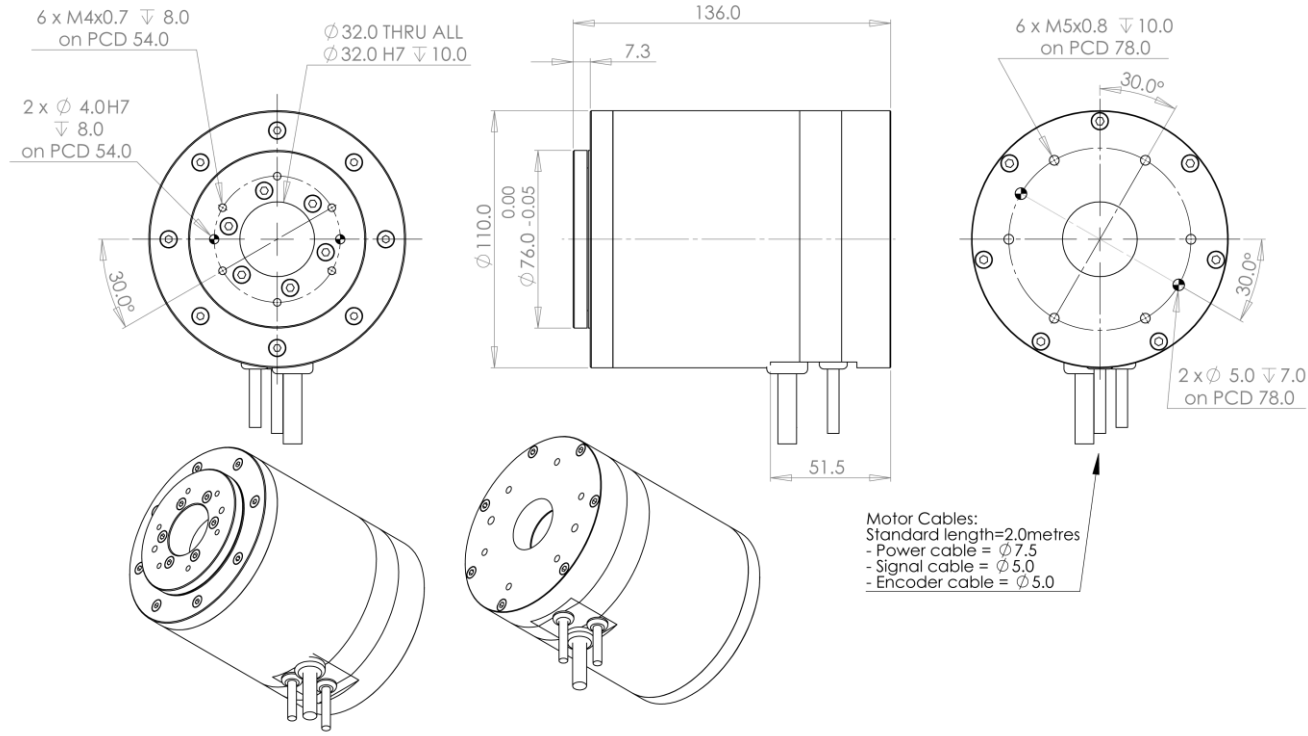

ADR135-B121

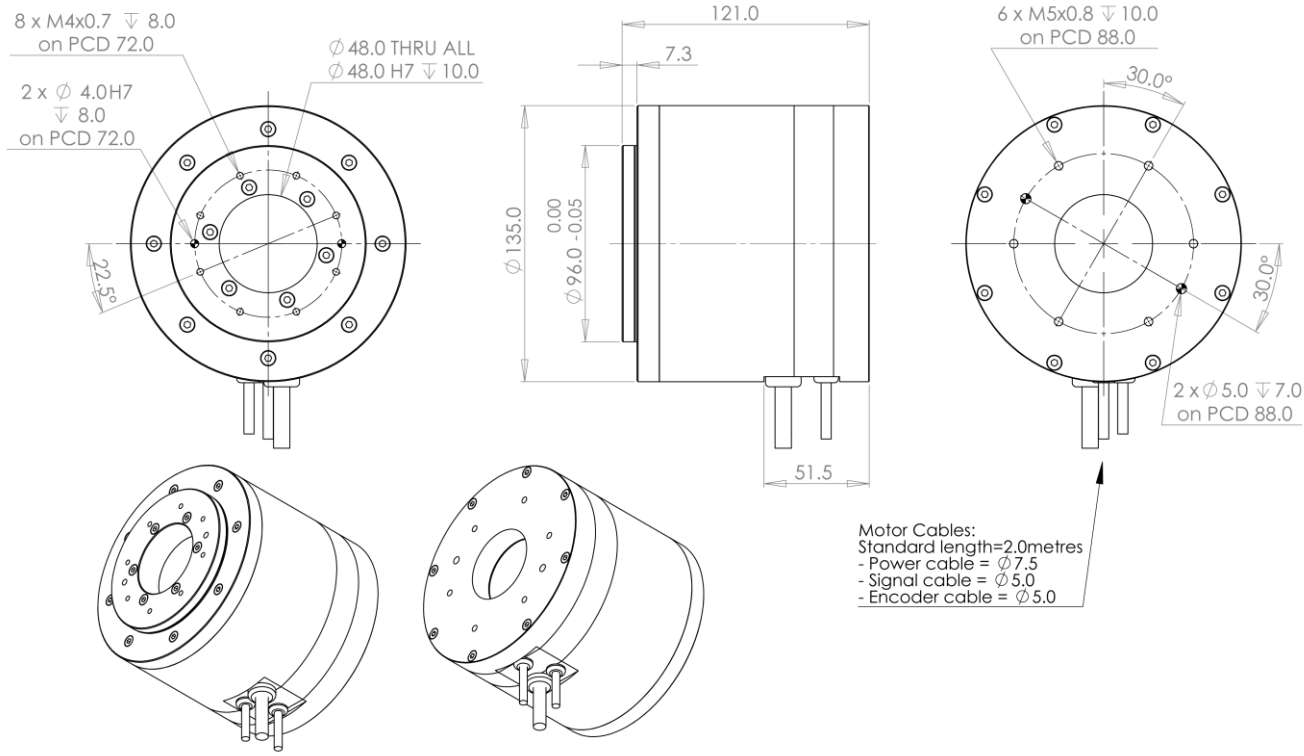

ADR135-B148

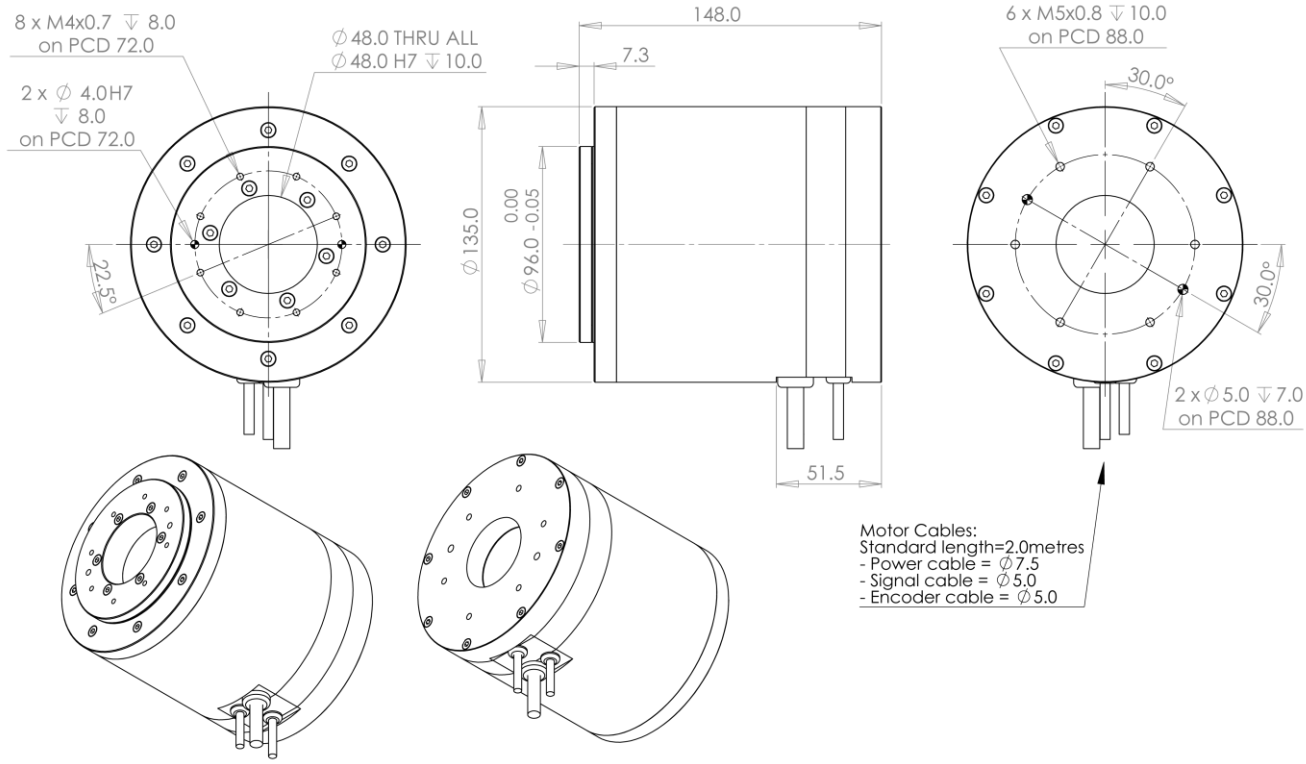

ADR175-B143

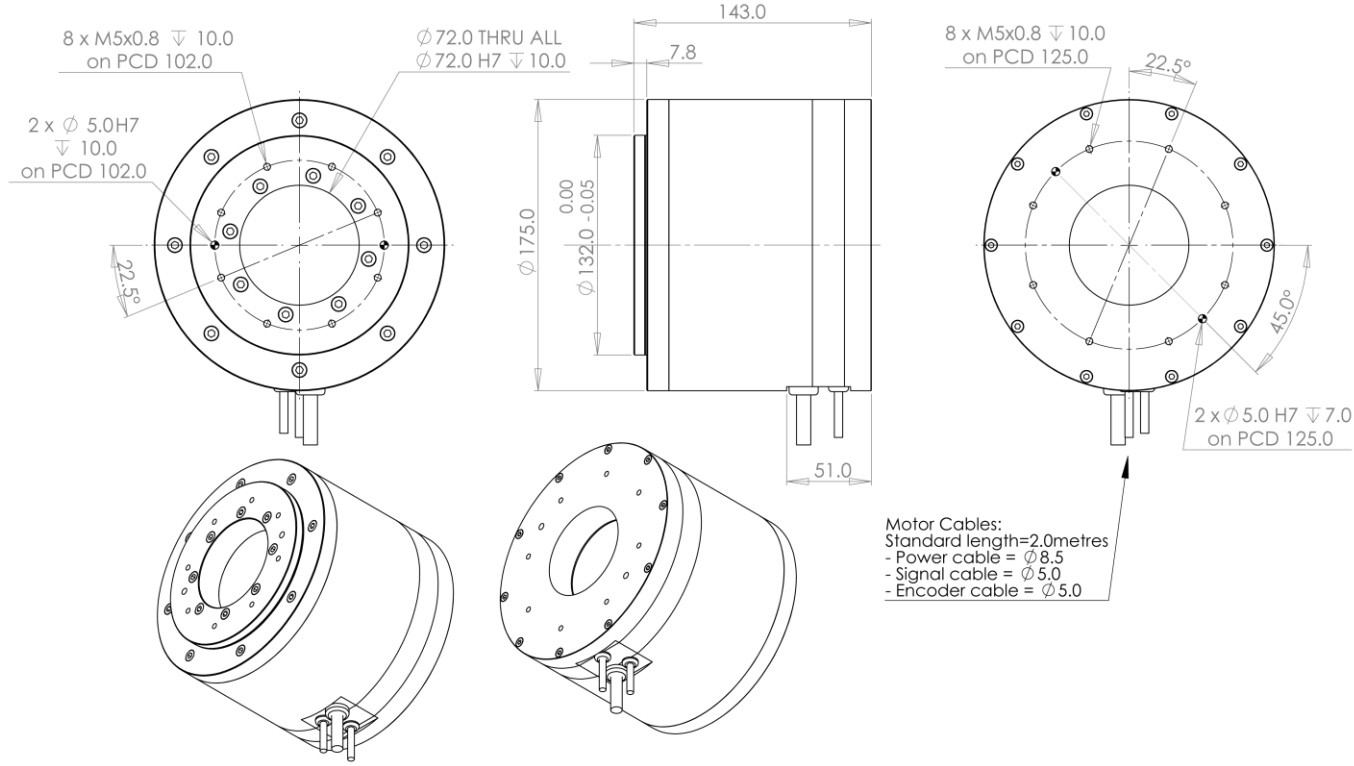

ADR175-B180

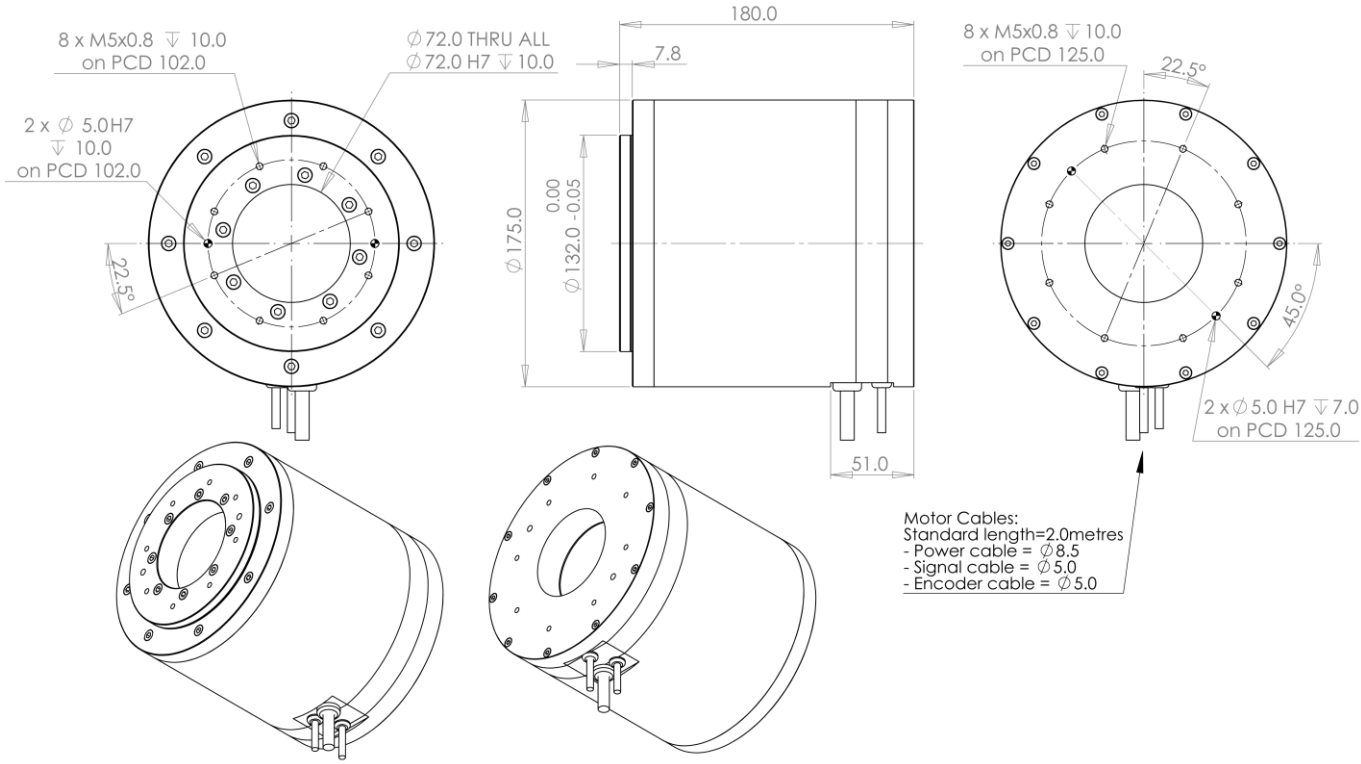

ADR220-B167

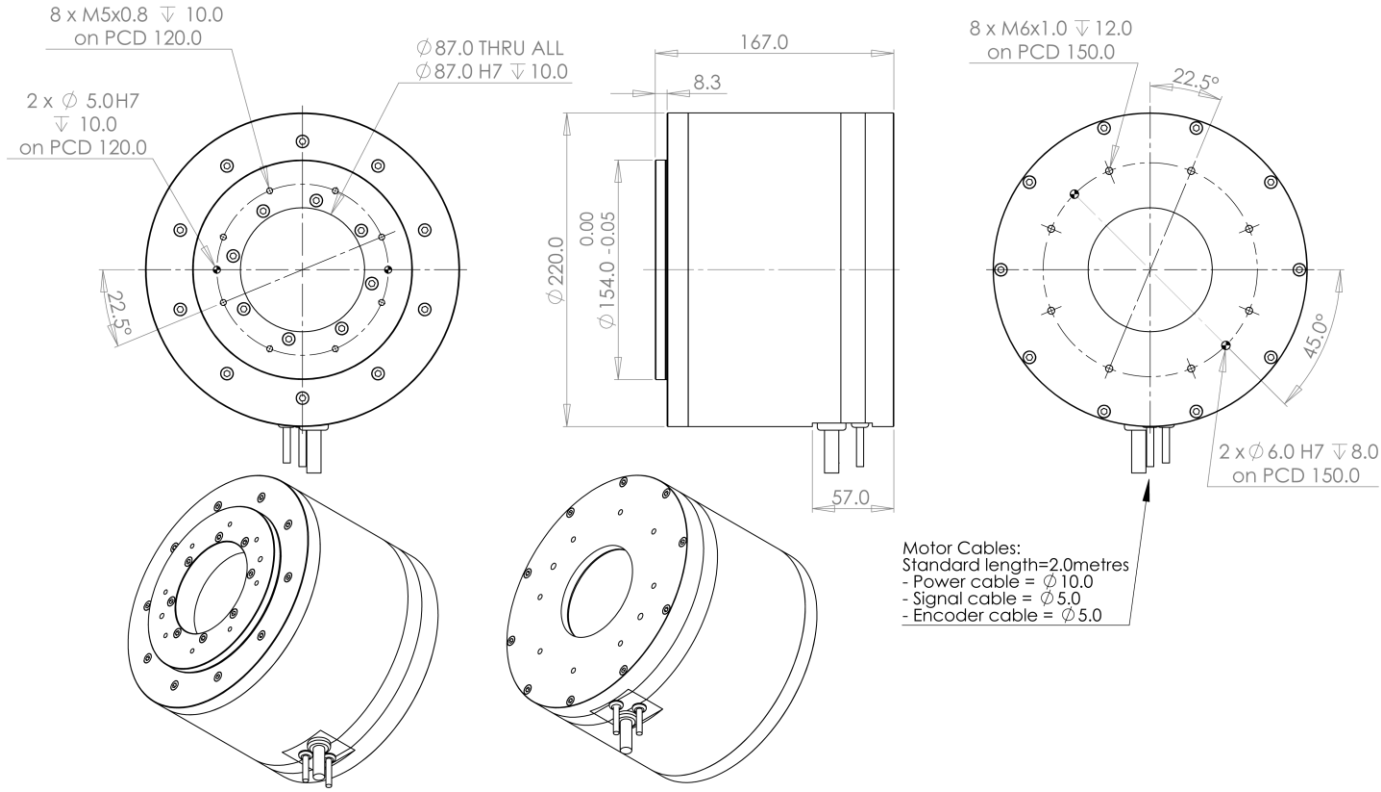

ADR220-B217

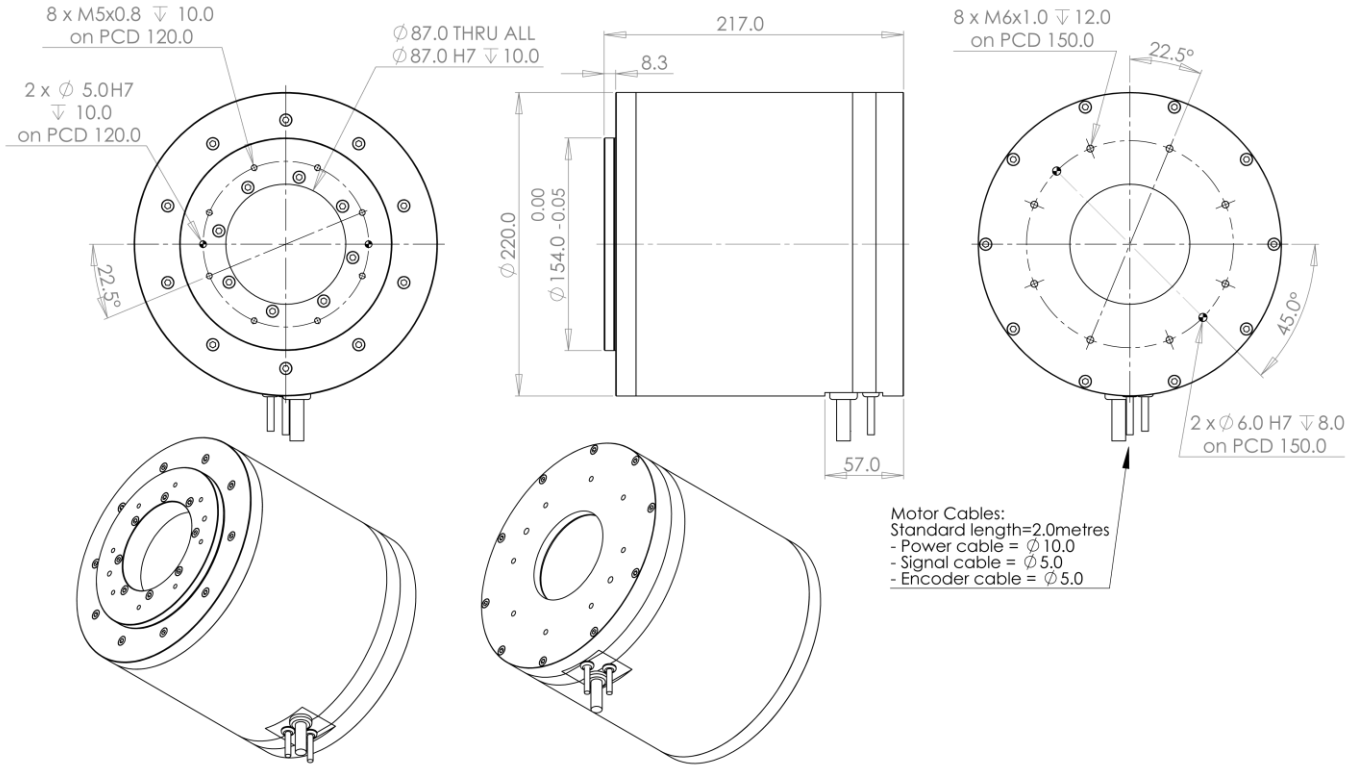

Part Numbering

Motor	Model	Winding	Thermal sensor	Cable length	Encoder	Encoder output
ADR110	B113/B136	S/P	J/K	2.0	SK-122	SINCOS-P15
ADR135	B121/B148				SK-180	SINCOS-P15
ADR175	B143/B180				SK-300	SINCOS-P20
ADR220	B167/B217				SK-300	SINCOS-P25

J- Thermostat

K- PT100 (RTD)

Example: ADR135-B121-S-J-2.0-SK-180-SINCOS-P15

Connector Pin Assignment

ADR-B

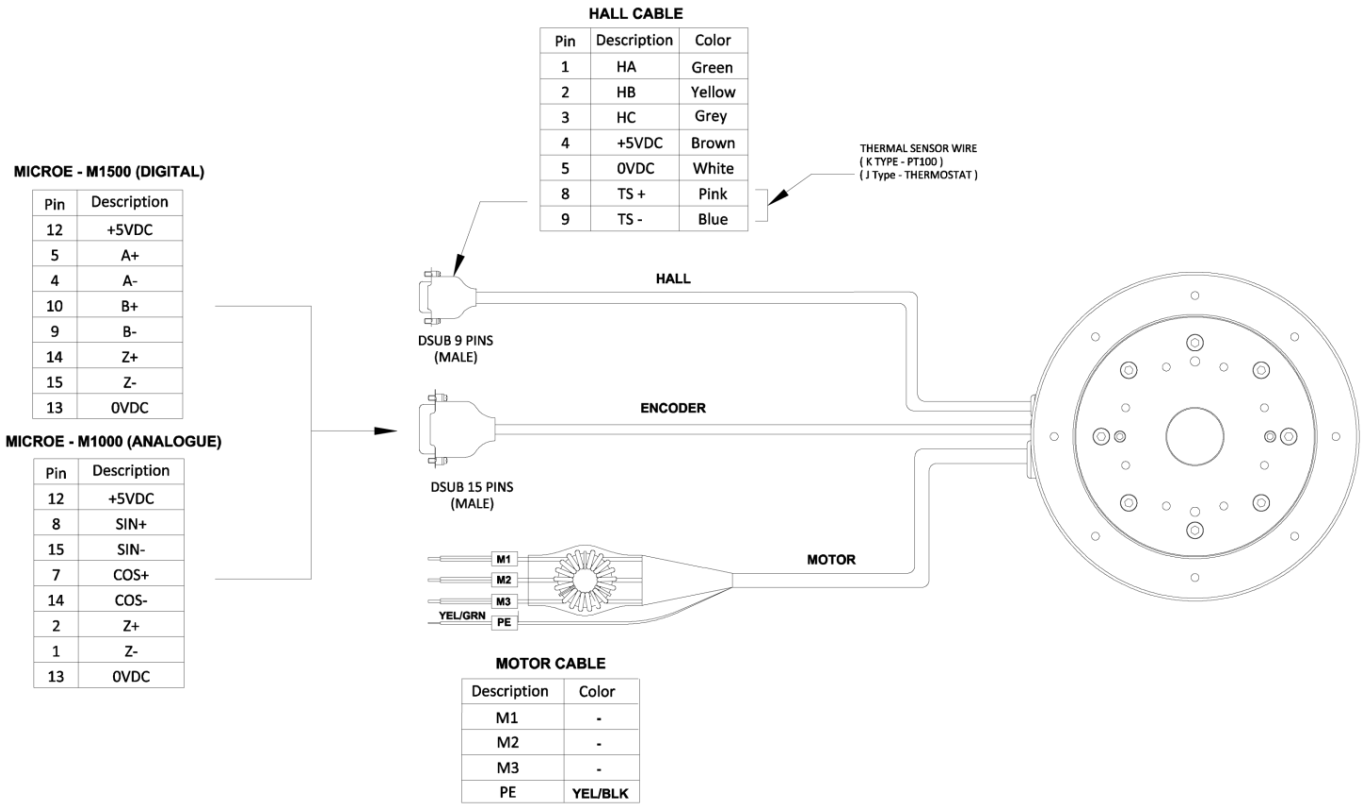

ADR-P Series

Frameless Rotary Motor

- **Direct drive, brushless motor integrated with hall sensors**
- **Low cogging torque**
- **Low speed and high speed windings**

ADR110-P Specifications		ADR110-P-22		ADR110-P-45	
Model	**Units**	**S**	**P**	**S**	**P**
Number of poles		16		16	
Continuous torque	Nm	1.9	1.9	4.2	4.2
Peak torque	Nm	5.8	5.8	12.6	12.6
Max. cogging torque (peak to peak)	Nm	0.0022	0.0022	0.0047	0.0047
Torque constant	Nm/Arms	0.65	0.32	1.40	0.70
Back EMF constant	Vpeak/rpm	0.055	0.028	0.119	0.060
Continuous current	Arms	3.0	6.0	3.0	6.0
Peak current	Arms	9.0	18.0	9.0	18.0
Resistance	ohms	3.20	0.80	4.90	1.21
Inductance	mH	17.15	4.29	26.26	6.49
Electrical time constant	ms	5.36	5.36	5.36	5.36
Motor constant	Nm/SqRt(W)	0.36	0.36	0.63	0.63
Rotor inertia	Kgm2	0.0001463	0.0001463	0.0002990	0.0002990
Rotor mass	Kg	0.25	0.25	0.40	0.40
Stator mass	Kg	0.88	0.88	1.80	1.80

ADR135-P Specifications		ADR135-P-27		ADR135-P-54	
Model	**Units**	**S**	**P**	**S**	**P**
Number of poles		16		16	
Continuous torque	Nm	4.5	4.5	10.3	10.3
Peak torque	Nm	13.6	13.6	31.0	31.0
Max. cogging torque (peak to peak)	Nm	0.009	0.009	0.021	0.021
Torque constant	Nm/Arms	1.51	0.76	3.44	1.72
Back EMF constant	Vpeak/rpm	0.129	0.065	0.294	0.147
Continuous current	Arms	3.0	6.0	3.0	6.0
Peak current	Arms	9.0	18.0	9.0	18.0
Resistance	ohms	5.81	1.45	9.31	2.33
Inductance	mH	39.51	9.88	63.31	15.83
Electrical time constant	ms	6.80	6.80	6.80	6.80
Motor constant	Nm/SqRt(W)	0.63	0.63	1.13	1.13
Rotor inertia	Kgm2	0.000424	0.000424	0.000846	0.000846
Rotor mass	Kg	0.45	0.45	0.90	0.90
Stator mass	Kg	1.45	1.45	3.00	3.00

ADR175-P Specifications		ADR175-P-36		ADR175-P-72	
Model	**Units**	**S**	**P**	**S**	**P**
Number of poles		16		16	
Continuous torque	Nm	14.3	14.3	31.5	31.5
Peak torque	Nm	42.9	42.9	94.4	94.4
Max. cogging torque (peak to peak)	Nm	0.085	0.085	0.188	0.188
Torque constant	Nm/Arms	3.58	1.79	7.87	3.93
Back EMF constant	Vpeak/rpm	0.306	0.153	0.672	0.336
Continuous current	Arms	4.0	8.0	4.0	8.0
Peak current	Arms	12.0	24.0	12.0	24.0
Resistance	ohms	4.91	1.23	8.18	2.05
Inductance	mH	42.57	10.64	70.92	17.73
Electrical time constant	ms	8.67	8.67	8.67	8.67
Motor constant	Nm/SqRt(W)	1.61	1.61	2.75	2.75
Rotor inertia	Kgm2	0.002453	0.002453	0.004892	0.004892
Rotor mass	Kg	1.10	1.10	2.10	2.10
Stator mass	Kg	3.50	3.50	5.90	5.90

ADR220-P Specifications		ADR220-P-50		ADR220-P-100	
Model	**Units**	**S**	**P**	**S**	**P**
Number of poles		24		24	
Continuous torque	Nm	43.0	43.0	91.9	91.9
Peak torque	Nm	129.1	129.1	275.8	275.8
Max. cogging torque (peak to peak)	Nm	0.334	0.334	0.713	0.713
Torque constant	Nm/Arms	7.97	2.66	17.02	5.67
Back EMF constant	Vpeak/rpm	0.681	0.227	1.456	0.485
Continuous current	Arms	5.4	16.2	5.4	16.2
Peak current	Arms	16.2	48.6	16.2	48.6
Resistance	ohms	5.81	0.65	9.83	1.09
Inductance	mH	57.62	6.40	97.48	10.83
Electrical time constant	ms	9.92	9.92	9.92	9.92
Motor constant	Nm/SqRt(W)	3.31	3.31	5.43	5.43
Rotor inertia	Kgm2	0.009249	0.009249	0.018314	0.018314
Rotor mass	Kg	2.30	2.30	4.50	4.50
Stator mass	Kg	7.50	7.50	15.00	15.00

ADR360-P Specifications		ADR360-P-70		ADR360-P-140	
Model	**Units**	**S**	**P**	**S**	**P**
Number of poles		32		32	
Continuous torque	Nm	171.0	171.0	358.0	358.0
Peak torque	Nm	513.0	513.0	1074.0	1074.0
Max. cogging torque (peak to peak)	Nm	1.86	1.86	3.96	3.96
Torque constant	Nm/Arms	17.10	8.55	35.80	17.90
Back EMF constant	Vpeak/rpm	1.462	0.731	3.061	1.530
Continuous current	Arms	10.0	20.0	10.0	20.0
Peak current	Arms	30.0	60.0	30.0	60.0
Resistance	ohms	2.92	0.73	5.14	1.29
Inductance	mH	30.37	7.59	53.46	13.36
Electrical time constant	ms	10.40	10.40	10.40	10.40
Motor constant	Nm/SqRt(W)	10.01	10.01	15.79	15.79
Rotor inertia	Kgm2	0.114477	0.114477	0.227243	0.227243
Rotor mass	Kg	7.30	7.30	13.80	13.80
Stator mass	Kg	17.50	17.50	33.00	33.00

ADR110-P-22

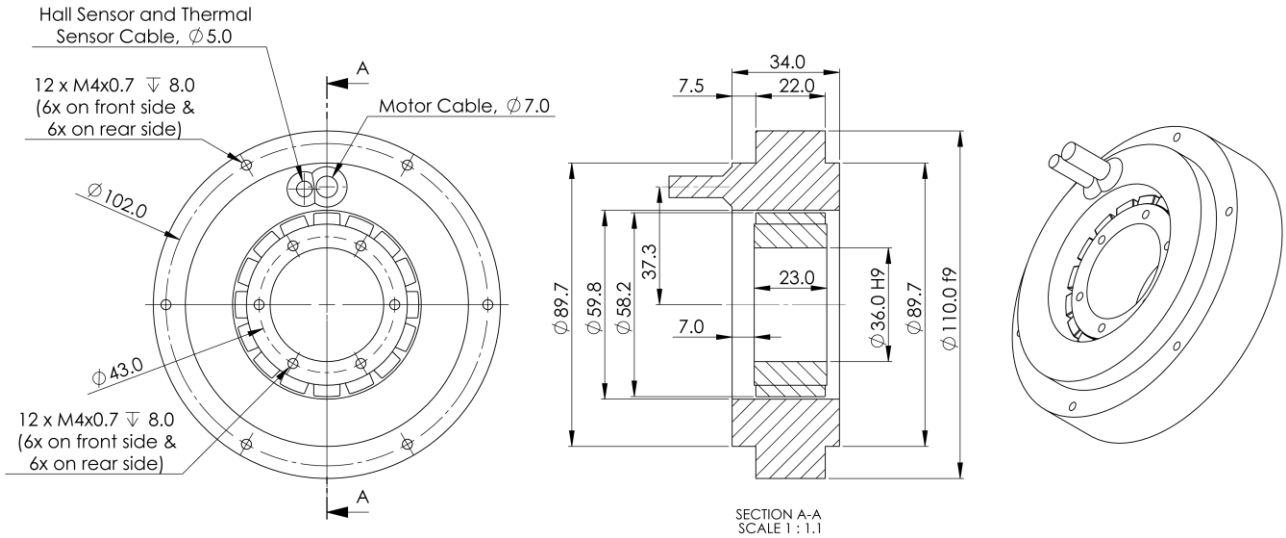

ADR110-P-45

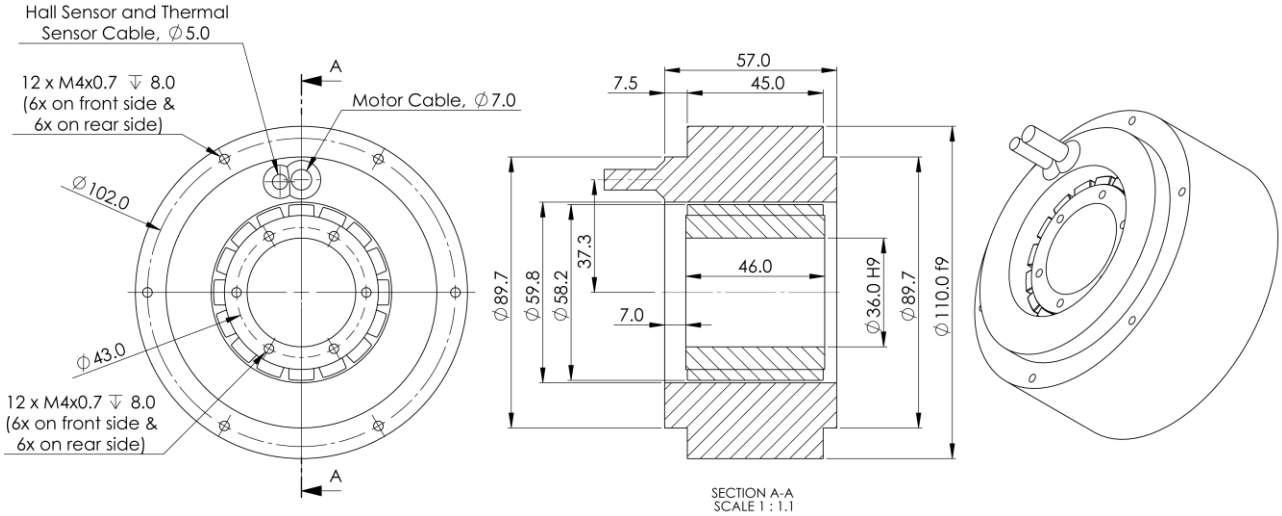

ADR135-P-27

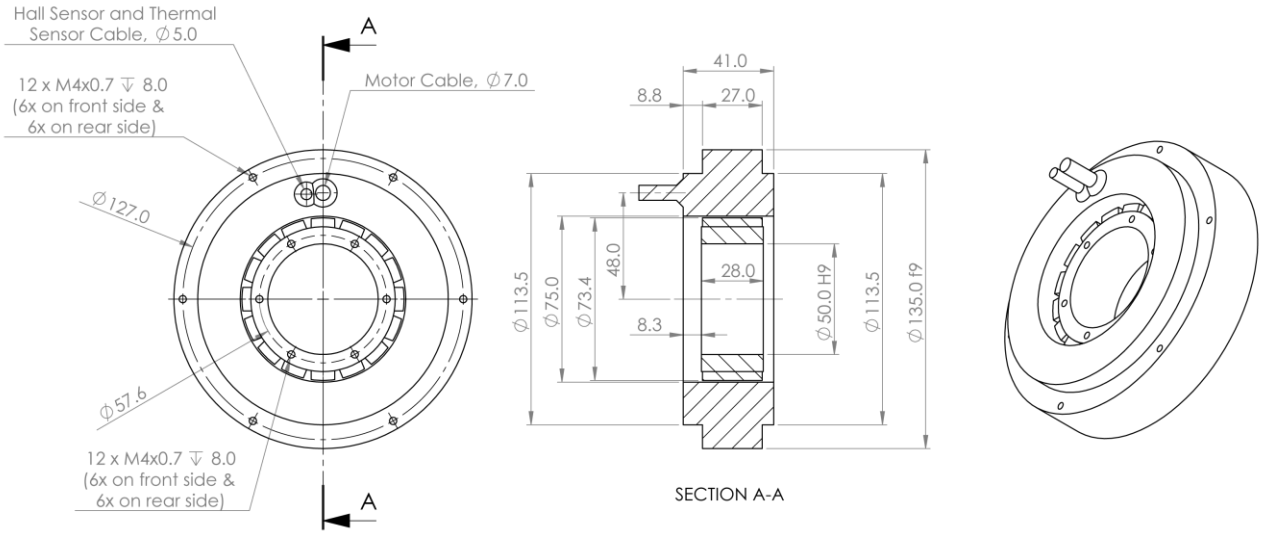

ADR135-P-54

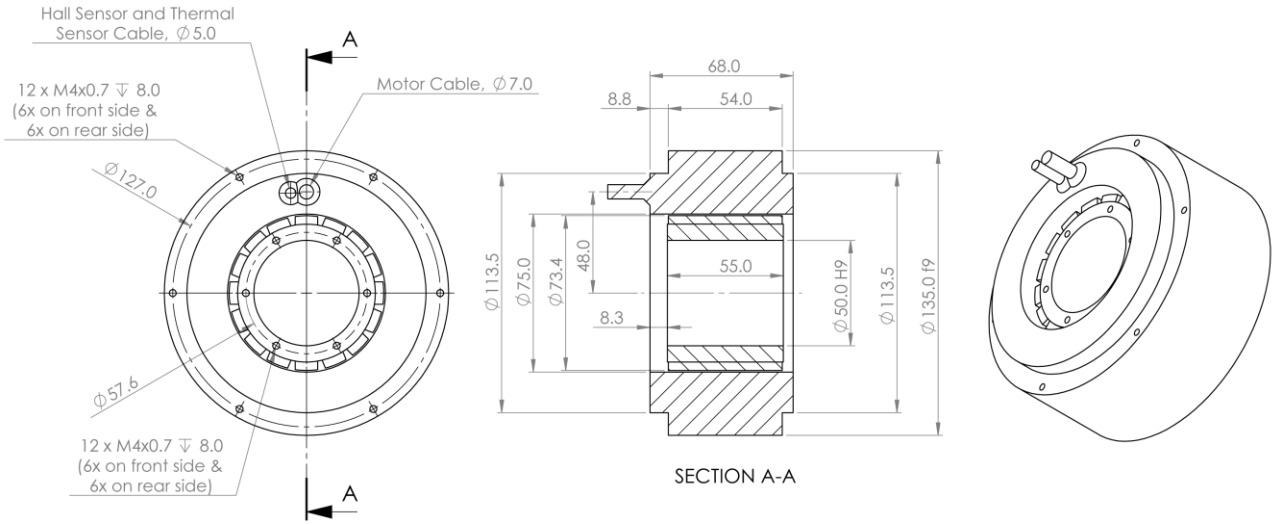

ADR175-P-36

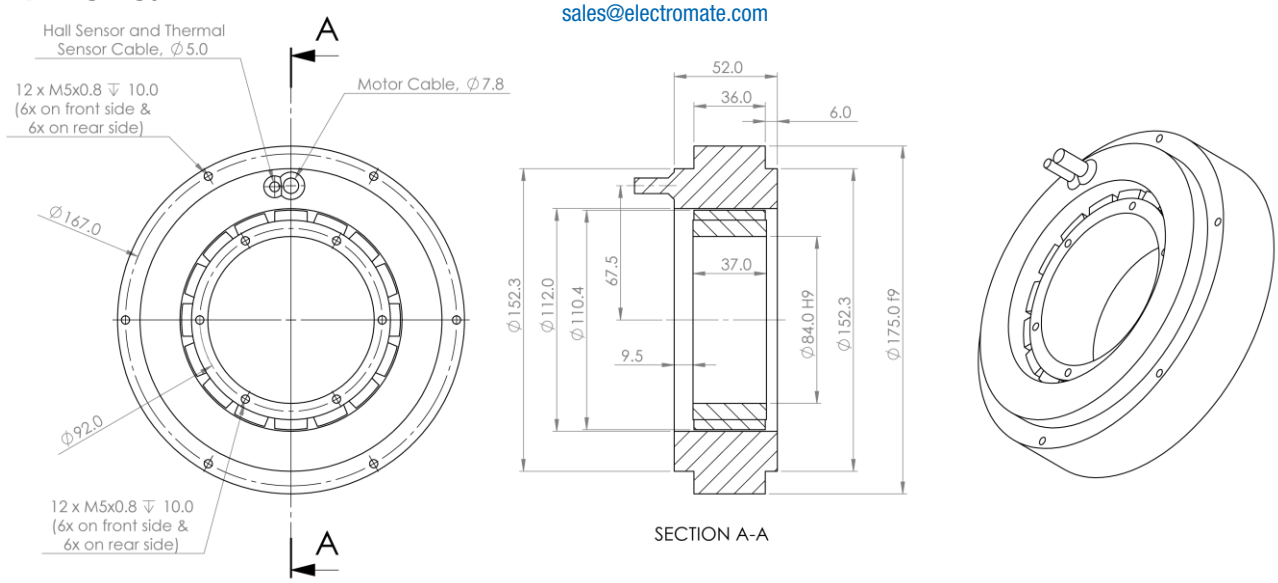

ADR175-P-72

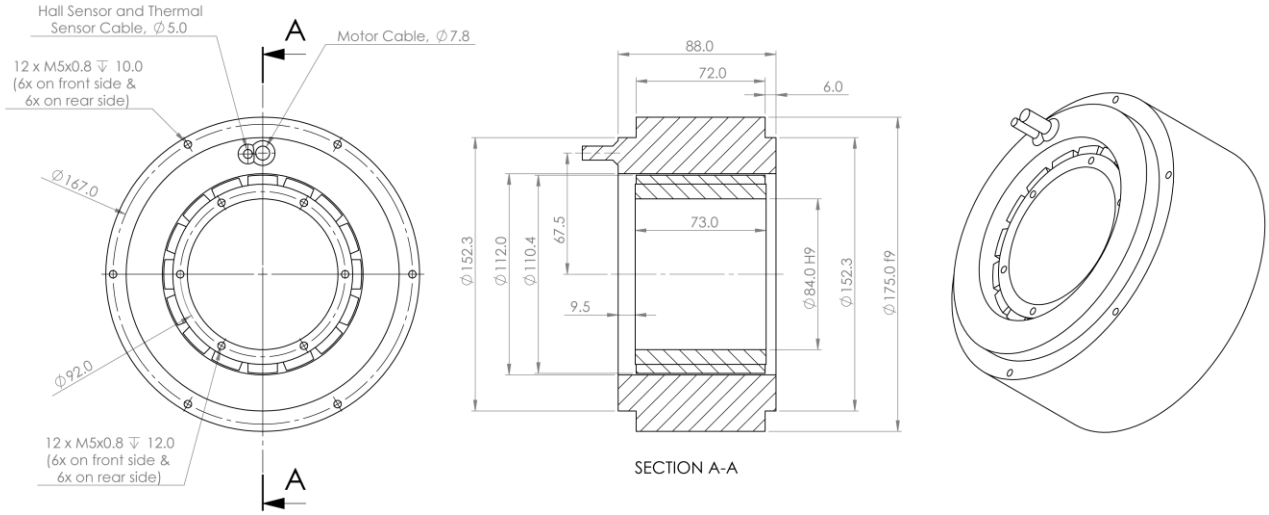

ADR220-P-50

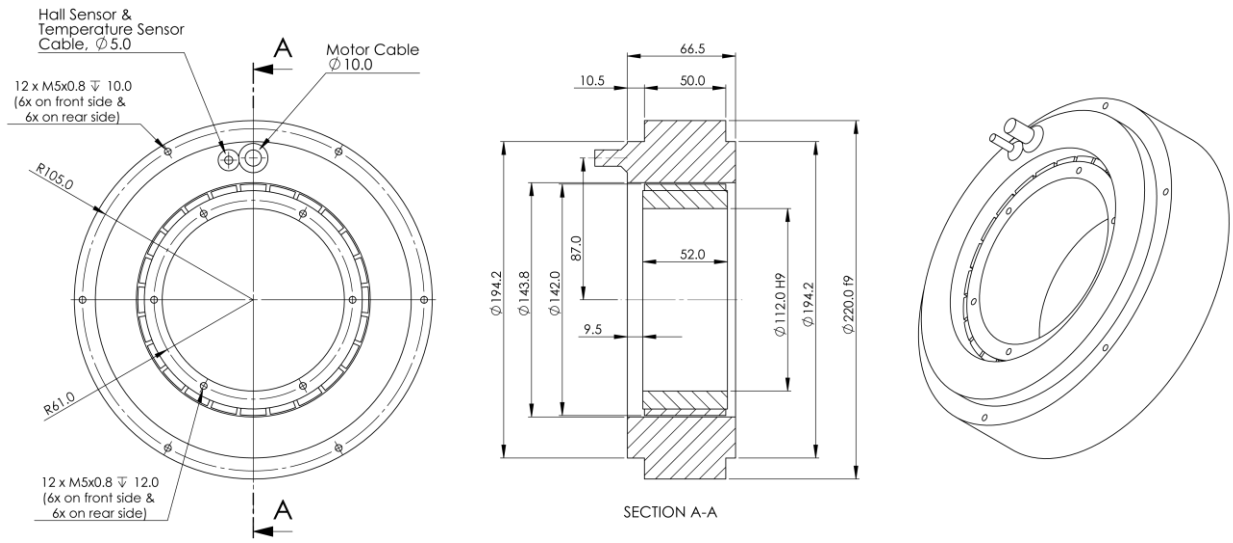

ADR220-P-100

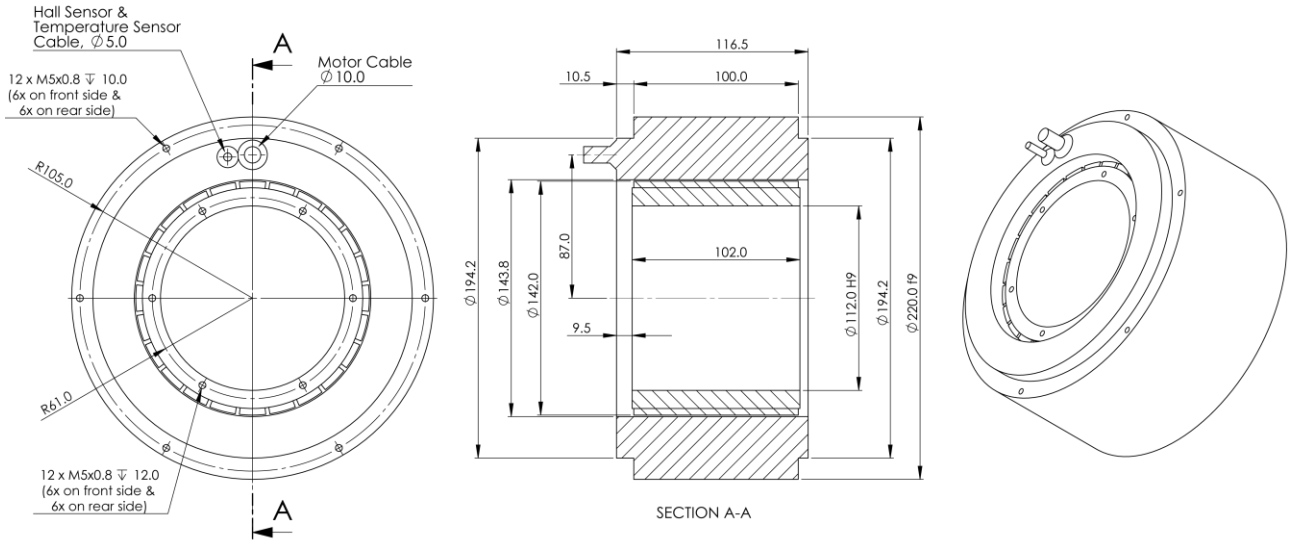

ADR360-P-70

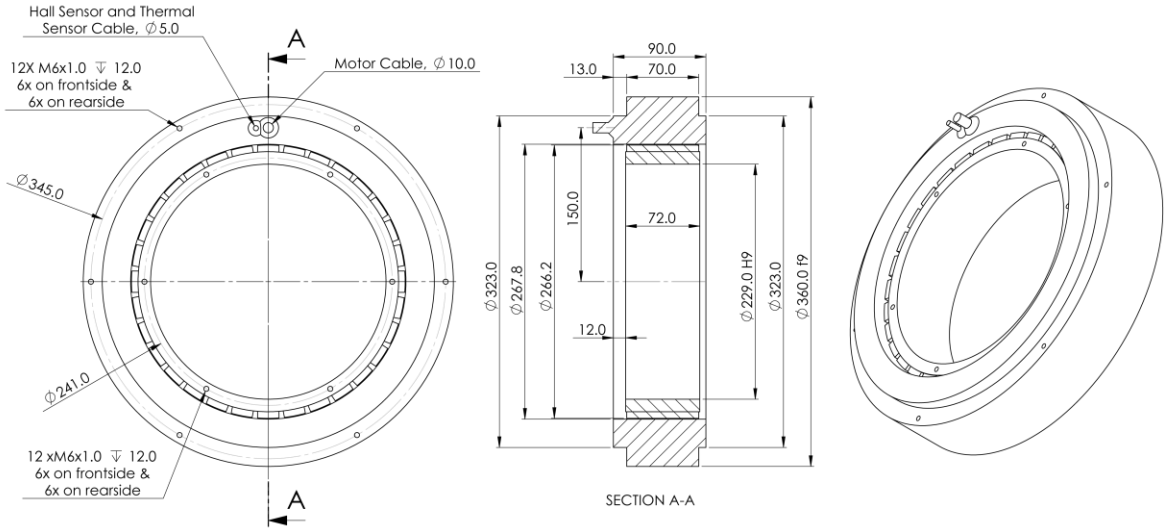

ADR360-P-140

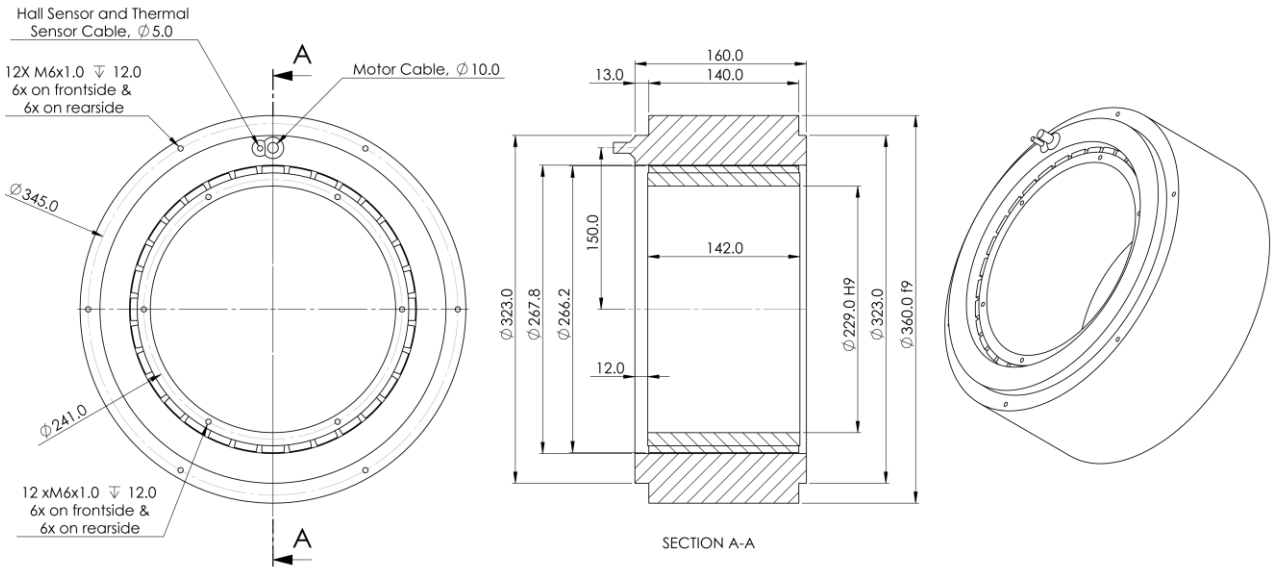

Part Numbering

Motor	Model	Winding	Thermal Sensor	Cable Length
ADR110-P	22/45	S/P	J/K	3.0
ADR135-P	27/54			
ADR175-P	36/72			
ADR220-P	50/100			
ADR360-P	70/140			

J- Thermostat

K- PT100 (RTD)

Example: ADR175-P-36-S-J-3.0

Connector Pin Assignment

ADR-P

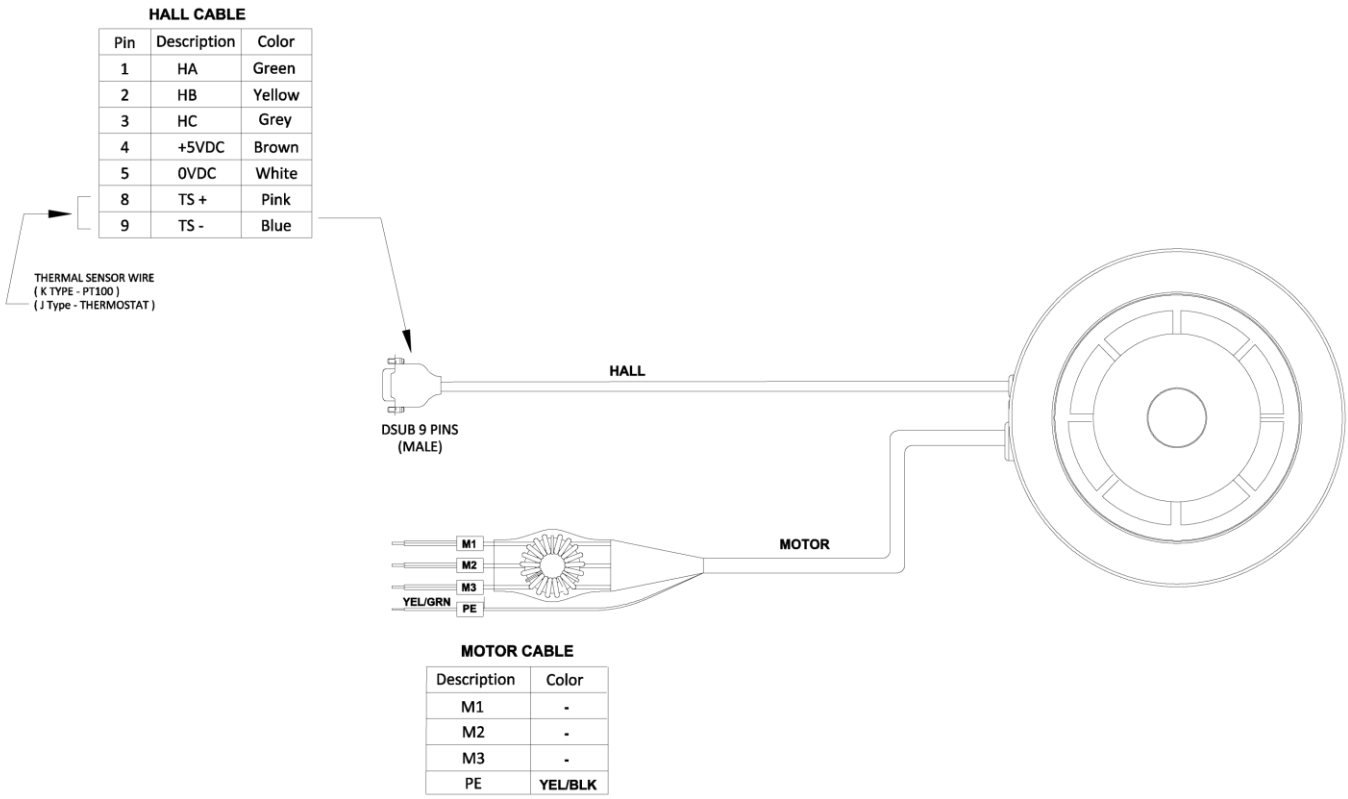

ACD Series

Coreless Direct Drive Rotary Motor

- **Direct drive, zero cogging coreless motor**
- **Encoder options of SINCOS or digital**
- **Precise homing through index pulse**
- **Fast response and settling**
- **Smooth motion even at low speeds (low velocity ripple)**

ACD62 Specifications		ACD62-60		ACD62-84	
Model	**Units**	**D**	**Y**	**D**	**Y**
Table diameter	mm	62		62	
Table height	mm	60		84	
Number of poles		8		8	
Continuous torque	Nm	0.115	0.115	0.341	0.341
Peak torque	Nm	0.40	0.40	1.19	1.19
Cogging torque	Nm	0	0	0	0
Torque constant	Nm/Arms	0.024	0.042	0.071	0.123
Back EMF constant	Vpeak/rpm	0.002	0.004	0.006	0.011
Continuous current	Arms	4.8	2.8	4.8	2.8
Peak current	Arms	16.8	9.7	16.8	9.7
Resistance [1]	ohms	0.73	1.51	1.01	2.21
Inductance [1]	mH	0.073	0.195	0.144	0.316
Electrical time constant	ms	0.10	0.13	0.14	0.14
Motor constant	Nm/SqRt(W)	0.028	0.034	0.071	0.083
Mass	Kg	0.50	0.50	0.80	0.80
Rotor Inertia	Kgm2	2.15683E-05	2.15683E-05	3.94386E-05	3.94386E-05
Max mechanical allowable speed	rpm	1,200	1,200	1,200	1,200
Max speed @24V DC	rpm	1,200	1,200	1,172	248
Max speed @48V DC	rpm	1,200	1,200	1,200	1,200
MS-6330 optical SINCOS encoder	lines	6,330	6,330	6,330	6,330
MS-6330 optical digital encoder (40X)	Counts/rev	253,200	253,200	253,200	253,200
Accuracy (based on MS-6330, 40X)	arc sec	+/- 51.2	+/- 51.2	+/- 51.2	+/- 51.2
Repeatability (based on MS-6330, 40X)	arc sec	+/- 5.12	+/- 5.12	+/- 5.12	+/- 5.12
Axial runout [2]	um	12	12	12	12
Radial runout [2]	um	10	10	10	10
Max axial load	N	50		50	
Max moment load	Nm	0.3		0.3	

ACD120 Specifications		ACD120-80		ACD120-175	
Model	**Units**	**D**	**Y**	**D**	**Y**
Table diameter	mm	120		120	
Table height	mm	80		175	
Number of poles		12		12	
Continuous torque	Nm	1.8	1.8	9.2	9.2
Peak torque	Nm	6.5	6.5	32.3	32.3
Cogging torque	Nm	0	0	0	0
Torque constant	Nm/Arms	0.36	0.63	1.81	3.13
Back EMF constant	Vpeak/rpm	0.031	0.054	0.154	0.268
Continuous current	Arms	5.1	2.9	5.1	2.9
Peak current	Arms	17.9	10.3	17.9	10.3
Resistance [1]	ohms	1.80	4.64	4.02	12.07
Inductance [1]	mH	0.628	1.900	1.873	5.619
Electrical time constant	ms	0.35	0.41	0.47	5.06
Motor constant	Nm/SqRt(W)	0.27	0.29	0.90	0.90
Mass	Kg	3.2	3.2	7.0	7.0
Rotor Inertia	Kgm2	0.001078	0.001078	0.003208	0.003208
Max mechanical allowable speed	rpm	952	952	952	952
Max speed @150V DC	rpm	952	952	506	96
Max speed @230V AC	rpm	952	952	952	450
MS-8192 optical SINCOS encoder	lines	8,192	8,192		
MS-8192 optical digital encoder(40X)	Counts/rev	327,680	327,680		
MS-11450 optical SINCOS encoder	lines			11,450	11,450
MS-11450 optical digital encoder(40X)	Counts/rev			458,000	458,000
Accuracy (based on MS-8192, 40X)	arc sec	+/- 39.6	+/- 39.6		
Repeatability (based on MS-8192, 40X)	arc sec	+/- 3.96	+/- 3.96		
Accuracy (based on MS-11450, 40X)	arc sec			+/- 28.3	+/- 28.3
Repeatability (based on MS-11450, 40X)	arc sec			+/- 2.83	+/- 2.83
Axial runout [2]	um	15	15	15	15
Radial runout [2]	um	10	10	10	10
Max axial load	N	150		150	
Max moment load	Nm	10		10	

ACD200 Specifications		ACD200-115		ACD200-145	
Model	**Units**	**D**	**Y**	**D**	**Y**
Table diameter	mm	200		200	
Table height	mm	115		145	
Number of poles		16		16	
Continuous torque	Nm	12.9	12.9	25.8	25.8
Peak torque	Nm	45.2	45.2	90.3	90.3
Cogging torque	Nm	0	0	0	0
Torque constant	Nm/Arms	2.53	4.38	5.06	8.77
Back EMF constant	Vpeak/rpm	0.216	0.375	0.433	0.750
Continuous current	Arms	5.1	2.9	5.1	2.9
Peak current	Arms	17.9	10.3	17.9	10.3
Resistance [1]	ohms	5.2	15.6	7.6	22.7
Inductance [1]	mH	3.64	10.92	6.05	18.16
Electrical time constant	ms	0.70	0.70	0.80	0.80
Motor constant	Nm/SqRt(W)	1.11	1.11	1.84	1.84
Mass	Kg	12.0	12.0	15.0	15.0
Rotor Inertia	Kgm2	0.034922	0.034922	0.045706	0.045706
Max mechanical allowable speed	rpm	517	517	517	517
Max speed @150V DC	rpm	264			
Max speed @230V AC	rpm	517	372	381	88
MS-16384 optical SINCOS encoder	lines	16,384	16,384	16,384	16,384
MS-16384 optical digital encoder(40X)	Counts/rev	655,360	655,360	655,360	655,360
Accuracy (based on MS-16384, 40X)	arc sec	+/- 19.8	+/- 19.8	+/- 19.8	+/- 19.8
Repeatability (based on MS-16384, 40X)	arc sec	+/- 1.98	+/- 1.98	+/- 1.98	+/- 1.98
Axial runout [2]	um	18	18	18	18
Radial runout [2]	um	14	14	14	14
Max axial load	N	300		300	
Max moment load	Nm	15		15	

1. Terminal to terminal, at 25 Deg C.

2. Values are based on axis of rotation (bearings) runout only. Surface or tabletop runout is not part of the specification.

ACD62-60-MS

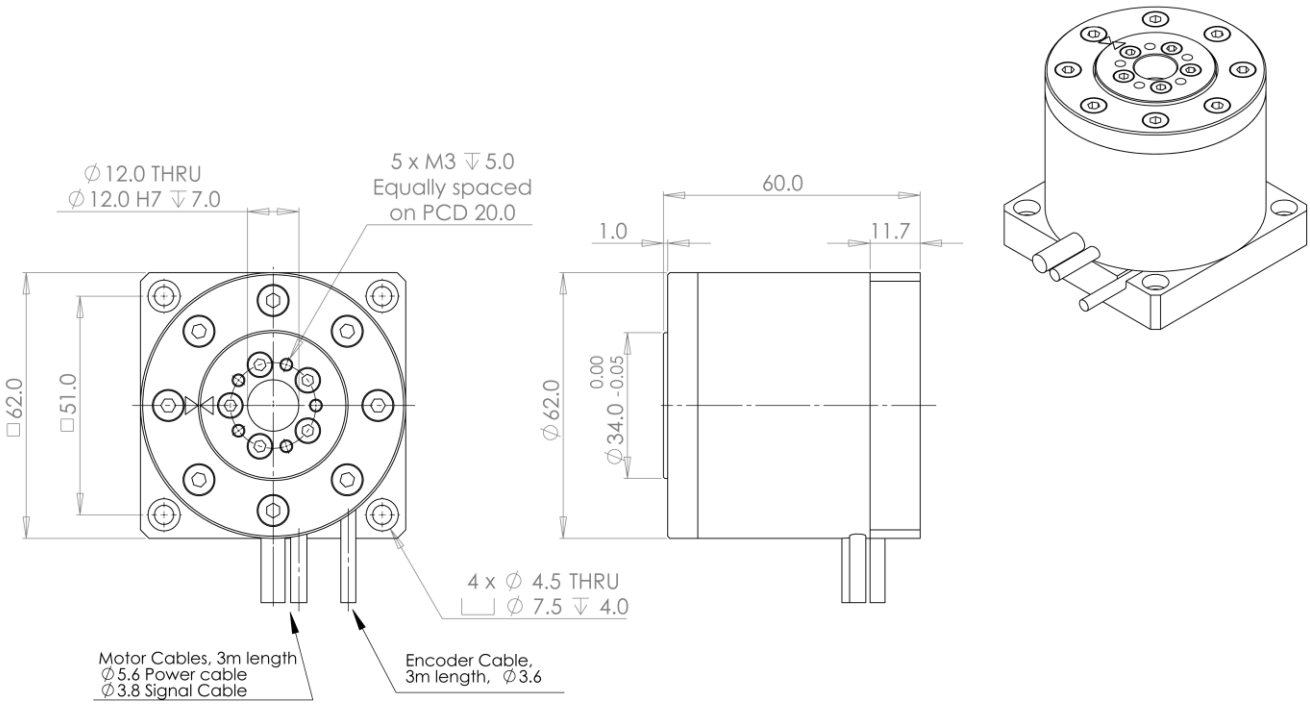

ACD62-84-MS

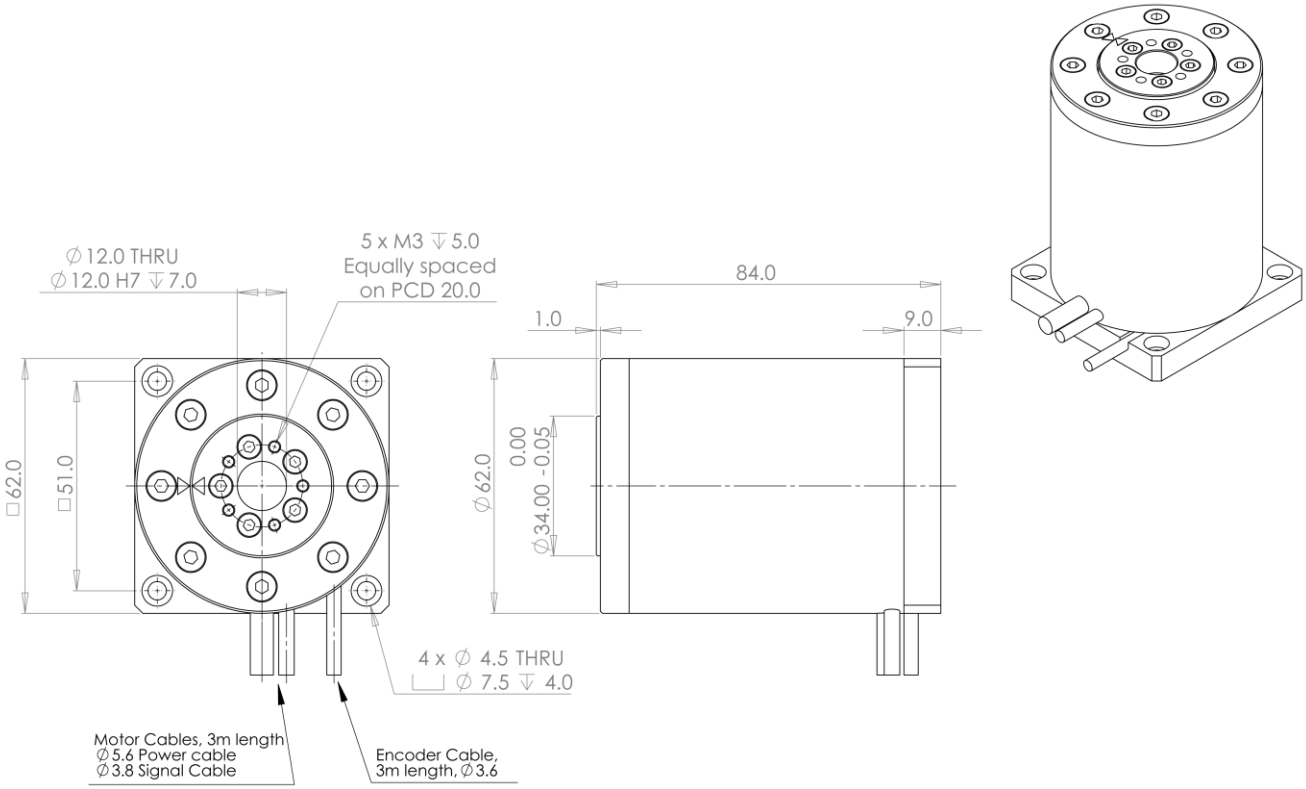

ACD120-80

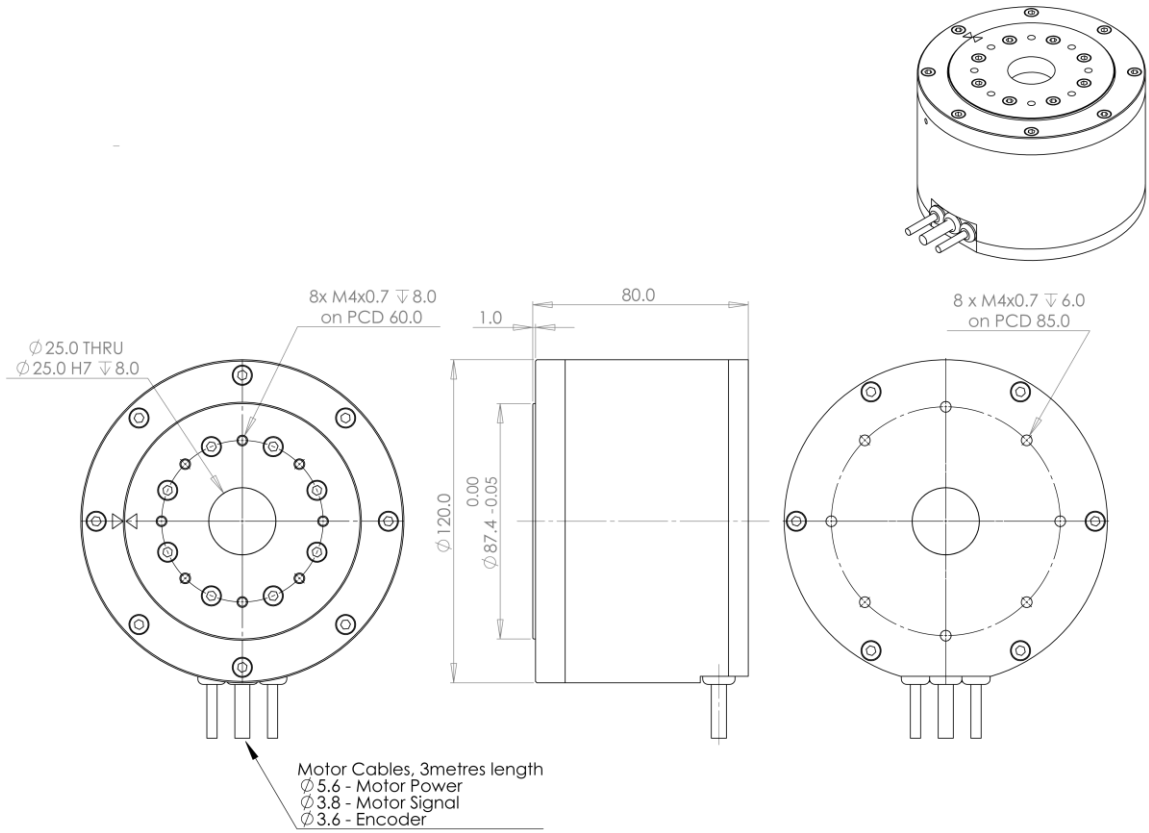

ACD120-175

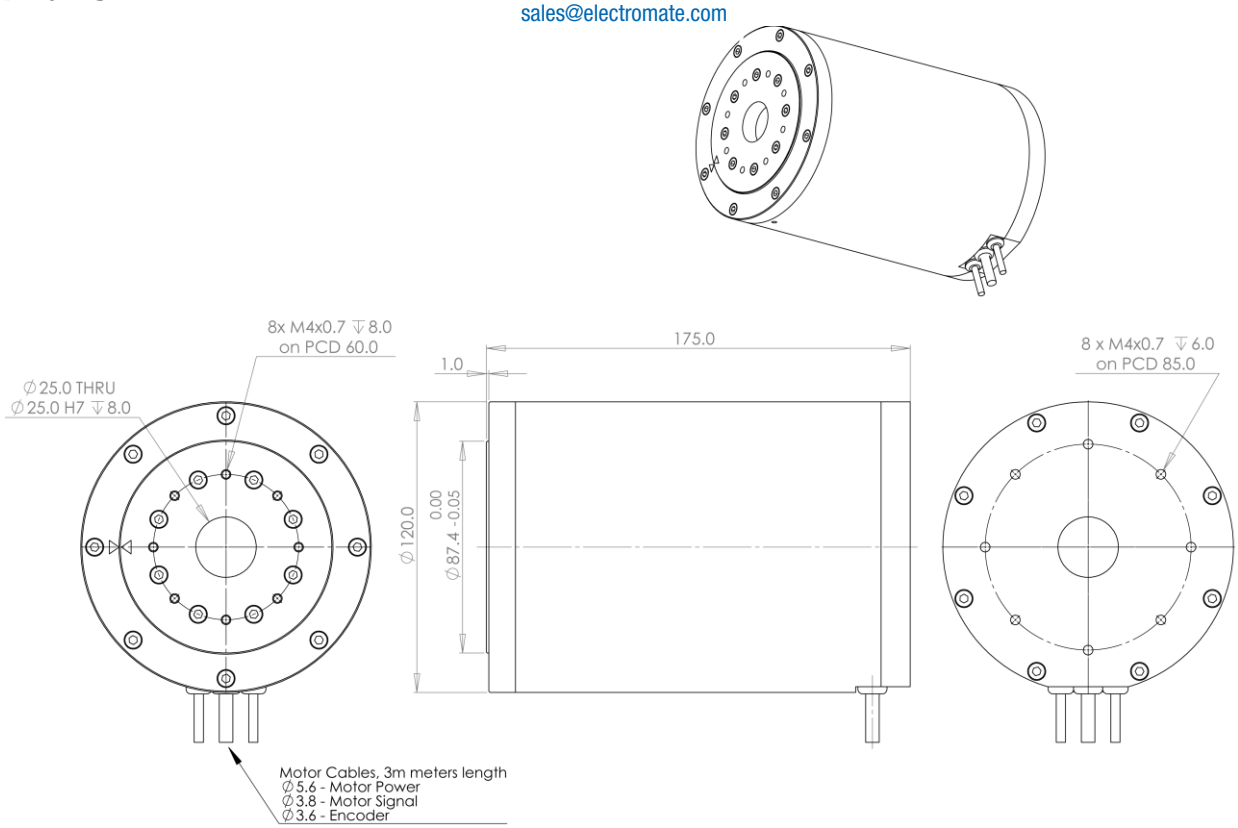

ACD200-115

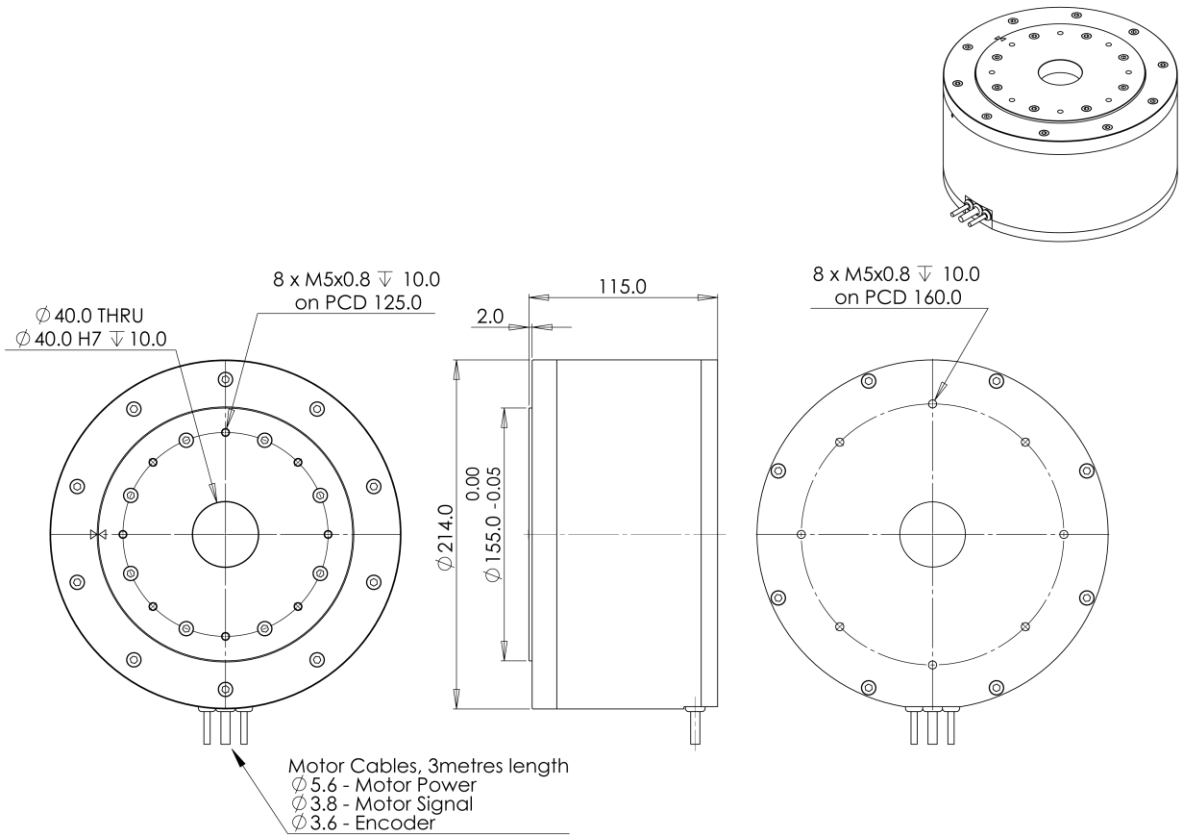

ACD200-145

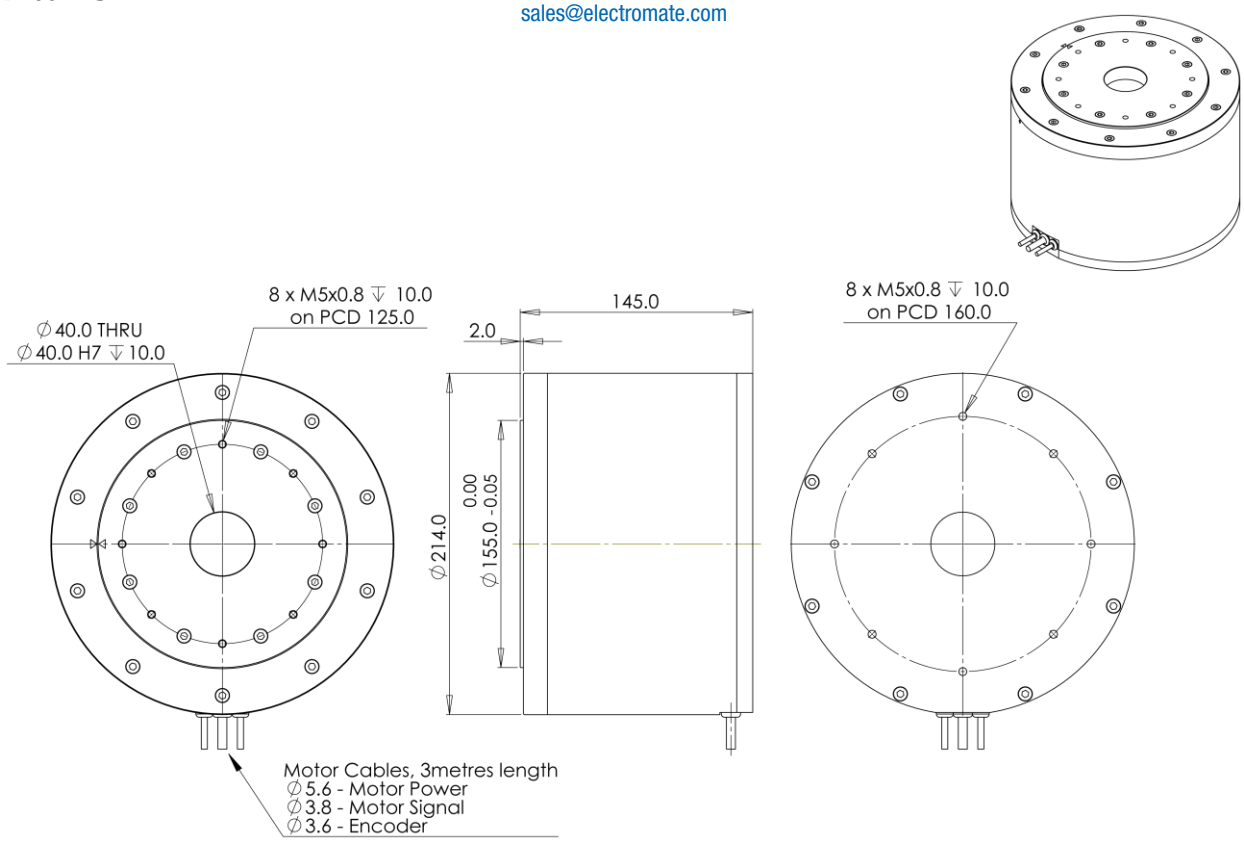

Part Numbering

Motor	Model	Connection	Thermal Sensor	Cable Length	Encoder Option	Interpolation Option
ACD62	60/84	D/Y	K	3.0	MS-6330	40X
ACD120	80				MS-8192	256X
	175				MS-11450	1024X
ACD200	115/145				MS-16384	SINCOS

K- PT100 (RTD)

Example: ACD120-80-Y-K-3.0-MS-8192-40X

Connector Pin Assignment

ACD

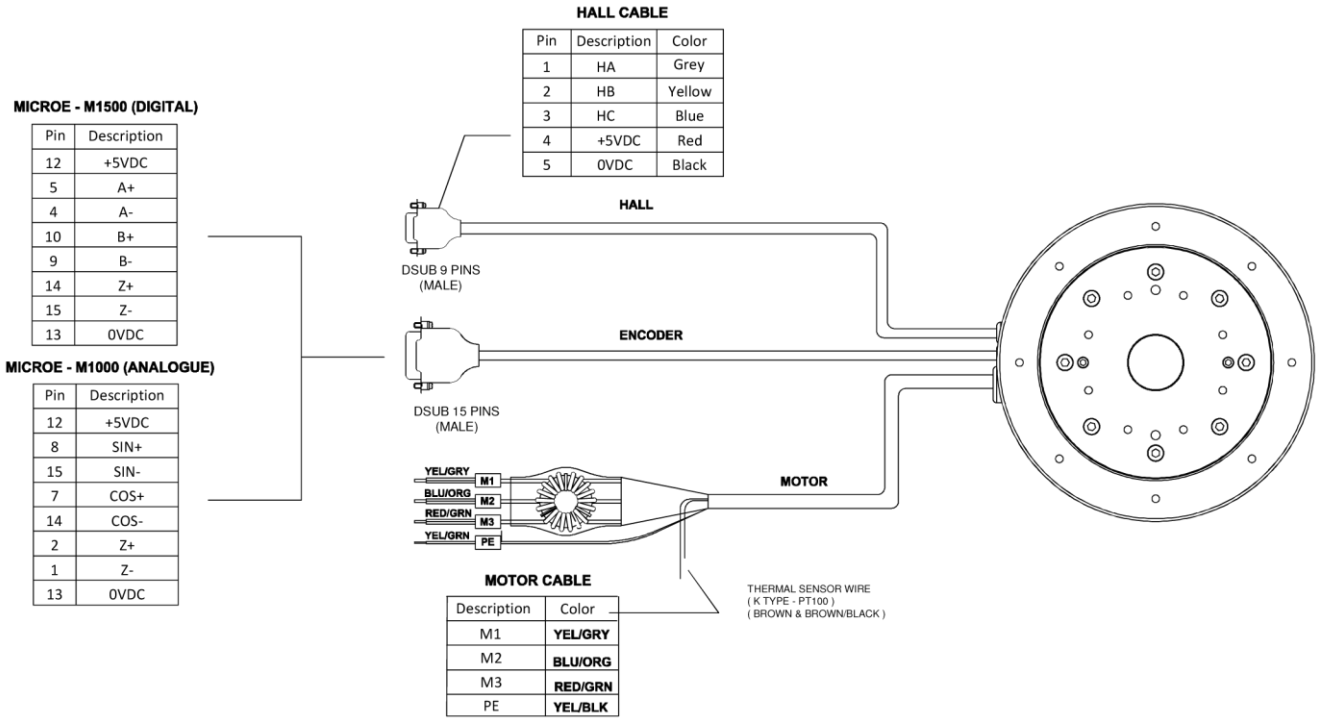

Pin	Description	Color
1	HA	Grey
2	HB	Yellow
3	HC	Blue
4	+5VDC	Red
5	0VDC	Black

Pin	Description
12	+5VDC
5	A+
4	A-
10	B+
9	B-
14	Z+
15	Z-
13	0VDC

Pin	Description
12	+5VDC
8	SIN+
15	SIN-
7	COS+
14	COS-
2	Z+
1	Z-
13	0VDC

Description	Color
M1	YEL/GRY
M2	BLU/ORG
M3	RED/GRN
PE	YEL/BLK

ATR Series

The Fastest Direct Drive Rotary Motor

(Patent Pending)

- **High Torque, low Rotor inertia**
- **No back iron in rotor**
- **Excellent dynamic performance**

ATR 152		ATR152-138		ATR152-138A		ATR152-138W	
		Standard		Air Cool		Water Cool	
Specifications	**Units**	**S**	**P**	**S**	**P**	S	P
Table diameter	mm	152					
Table height	mm	138					
Number of poles		16					
Continuous torque	Nm	17.8	17.8	20.5	20.5	35.6	35.6
Peak torque	Nm	53.5	53.5	53.5	53.5	53.5	53.5
Max. cogging torque (peak to peak)	Nm	0.070	0.070	0.070	0.070	0.070	0.070
Torque constant	Nm/Arms	5.15	2.58	5.15	2.58	5.15	2.58
Back EMF constant	Vpeak/rpm	0.440	0.220	0.440	0.220	0.440	0.220
Continuous current	Arms	3.5	6.9	4.0	8.0	6.9	13.8
Peak current	Arms	10.4	20.8	10.4	20.8	10.4	20.8
Continuous power	W	91.9	91.9	121.6	121.6	367.8	367.8
Peak power	W	827.5	827.5	827.5	827.5	827.5	827.5
Resistance [1]	ohms	7.68	1.92	7.68	1.92	7.68	1.92
Inductance [1]	mH	66.00	16.50	66.00	16.50	66.00	16.50
Electrical time constant	ms	8.6	8.6	8.6	8.6	8.6	8.6
Motor constant	Nm/SqRt(W)	1.86	1.86	1.86	1.86	1.86	1.86
Mass	Kg	8.5	8.5	8.5	8.5	8.5	8.5
Rotor Inertia	Kgm2	0.001587	0.001587	0.001587	0.001587	0.001587	0.001587
Rec. max speed @230V AC	rpm	500	1182	500	1182	500	1182
MS-16384 optical SINCOS encoder	lines	16,384	16,384	16,384	16,384	16,384	16,384
MS-16384 optical digital encoder (40X)	Counts/rev	655,360	655,360	655,360	655,360	655,360	655,360
Axial / Radial runout	um	15 (10,5) [2]					
Maximum axial load	N	1,500					
Maximum moment load	Nm	48					

ATR 175		ATR175-162		ATR175-162A		ATR175-162W	
		Standard		Air Cool		Water Cool	
Specifications	**Units**	**S**	**P**	**S**	**P**	**S**	**P**
Table diameter	mm	175					
Table height	mm	162					
Number of poles		16					
Continuous torque	Nm	33.9	33.9	39.0	39.0	67.8	67.8
Peak torque	Nm	101.8	101.8	101.8	101.8	101.8	101.8
Max. cogging torque (peak to peak)	Nm	0.192	0.192	0.192	0.192	0.192	0.192
Torque constant	Nm/Arms	6.40	3.20	6.40	3.20	6.40	3.20
Back EMF constant	Vpeak/rpm	0.547	0.274	0.547	0.274	0.547	0.274
Continuous current	Arms	5.3	10.6	6.1	12.2	10.6	21.2
Peak current	Arms	15.9	31.8	15.9	31.8	15.9	31.8
Continuous power	W	151.7	151.7	200.6	200.6	606.7	606.7
Peak power	W	1,365.2	1,365.2	1,365.2	1,365.2	1,365.2	1,365.2
Resistance [1]	ohms	5.40	1.35	5.40	1.35	5.40	1.35
Inductance [1]	mH	37.26	9.30	37.26	9.30	37.26	9.30
Electrical time constant	ms	6.9	6.9	6.9	6.9	6.9	6.9
Motor constant	Nm/SqRt(W)	2.75	2.75	2.75	2.75	2.75	2.75
Mass	Kg	13.9	13.9	13.9	13.9	13.9	13.9
Rotor Inertia	Kgm2	0.004419	0.004419	0.004419	0.004419	0.004419	0.004419
Rec. max speed @230V AC	rpm	391	940	391	940	391	940
MS-20250 optical SINCOS encoder	lines	20,250	20,250	20,250	20,250	20,250	20,250
MS-20250 optical digital encoder (40X)	Counts/rev	810,000	810,000	810,000	810,000	810,000	810,000
Axial / Radial runout	um	20 (10,5) [2]					
Maximum axial load	N	2,310					
Maximum moment load	Nm	58					

1. Terminal to terminal, at 25 Deg C.
2. Optional.

ATR152-138

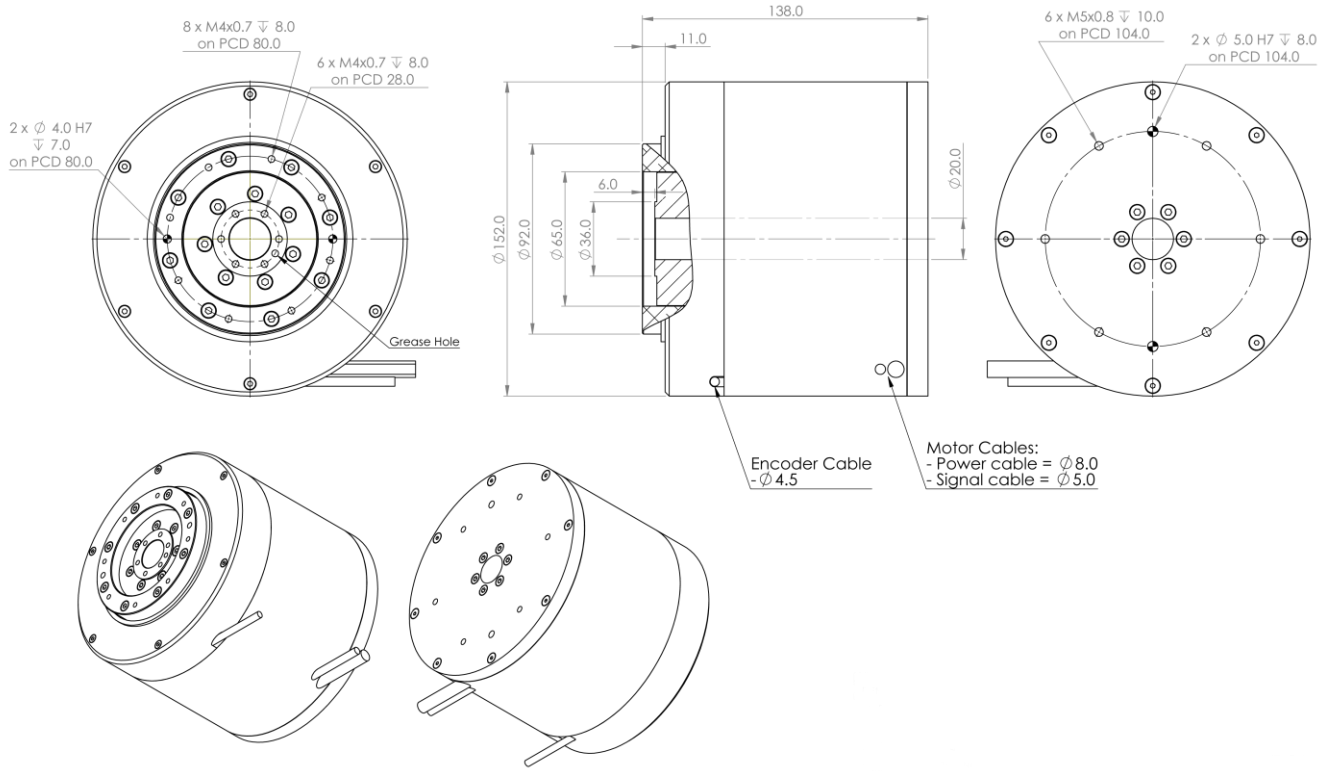

ATR152-138A-138W

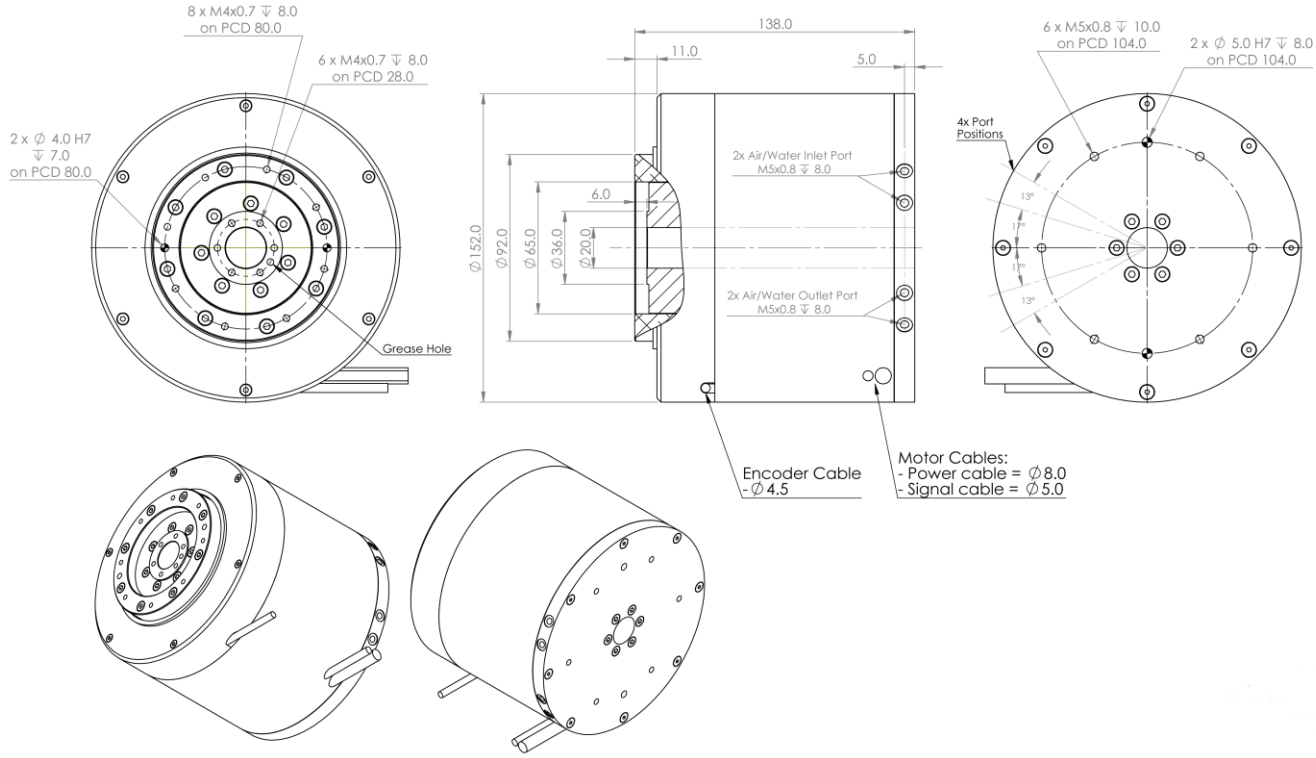

ATR175-162

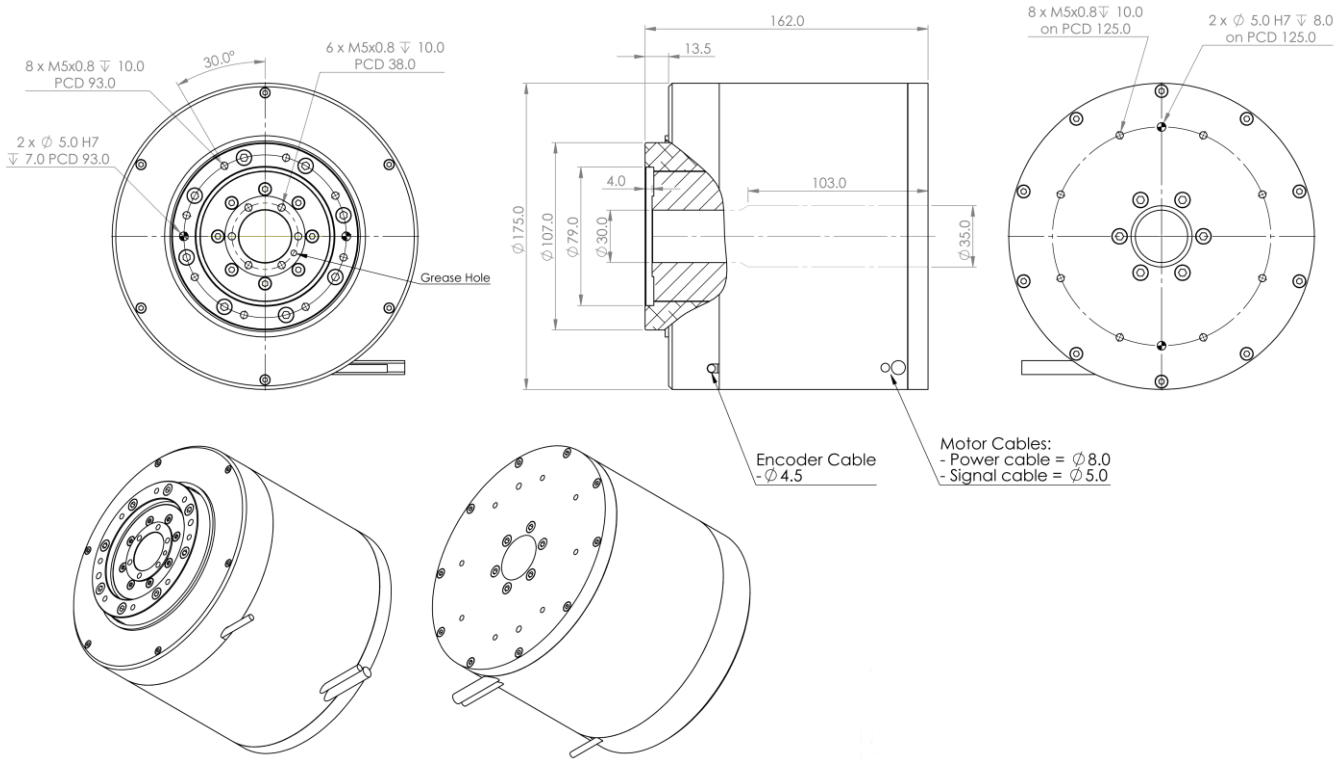

ATR175-162A-162W

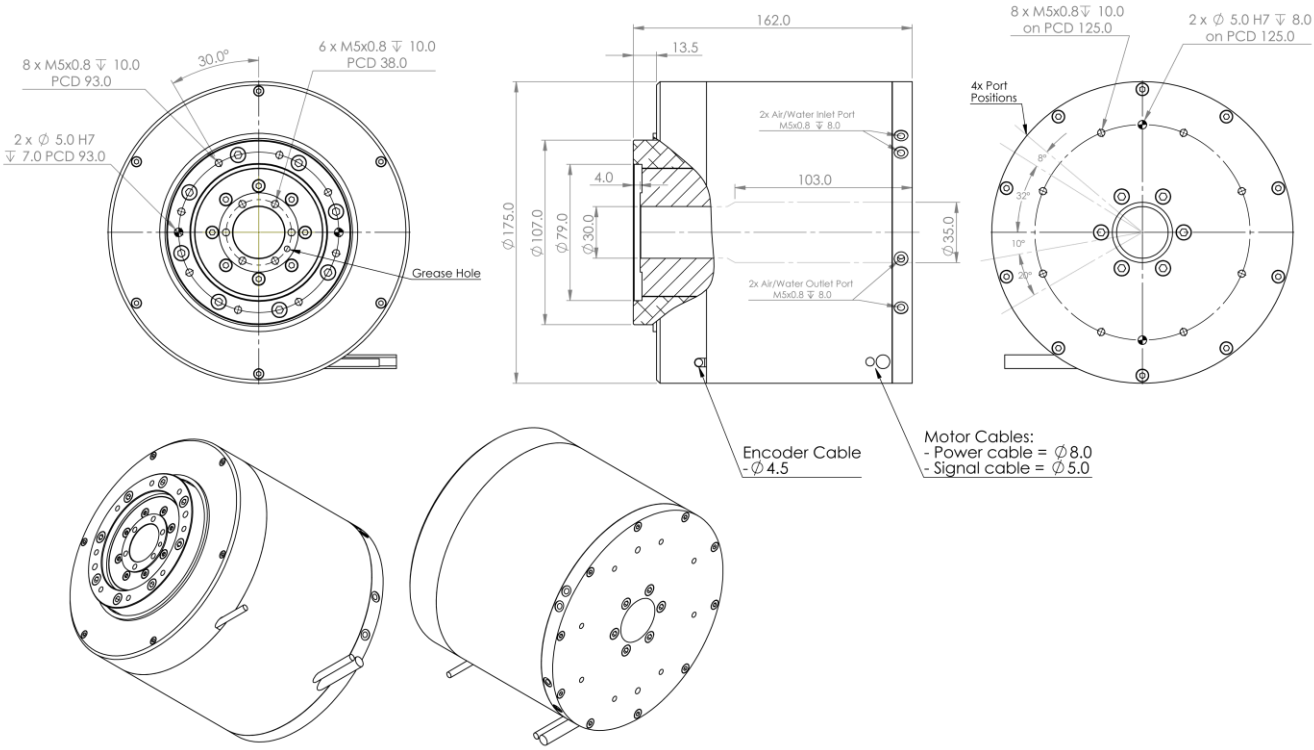

Part Numbering

Motor	Height	Cooling	Winding	Thermal Sensor	Cable Length	Interpolation Option
ATR152	138	Blank/A/W	S/P	J/K	3.0	40X 256X 1024X SINCOS
ATR175	162					

J- Thermostat

K- PT100 (RTD)

Example: ATR152-138-P-J-3.0-MS-16384-40X

Connector Pin Assignment

ATR

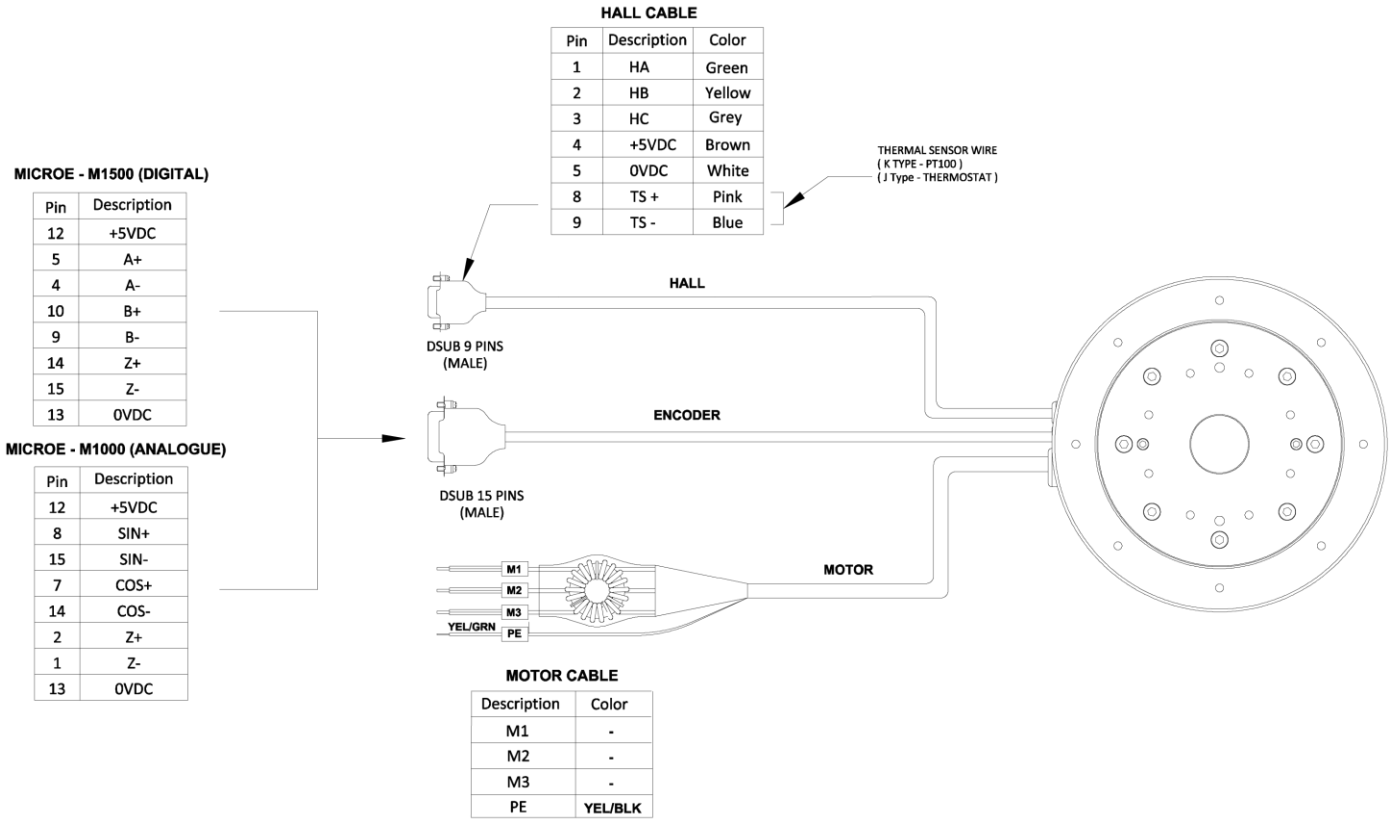

ACW Series

Direct Drive Rotary Motor

- **Direct drive, brushless motor fully integrated with encoder and bearing**
- **No cogging**
- **Precise homing through index pulse**
- **Large centre hole**
- **Low profile**

ACW Specifications		ACW 120	ACW 170	ACW 220
Model	**Units**			
Table diameter	mm	120	170	220
Table height	mm	37	37	42
Number of poles		16	16	16
Continuous torque	Nm	0.6	3.4	10.25
Peak torque	Nm	4.77	13.09	23.2
Cogging torque	Nm	0	0	0
Torque constant	Nm/Arms	0.12	0.68	2.05
Back EMF constant	V/rpm	0.01	0.058	0.175
Continuous current	Arms	5	5	5
Peak current	Arms	17.5	17.5	17.5
Resistance [2]	ohms	1.14	2.67	4.28
Motor constant	Nm/SqRt(W)	0.11	0.42	0.99
Mass	Kg	1.6	3.1	6.5
Rotor Inertia	Kgm2	0.00065839	0.0017091	0.01
Rec. max speed	rpm	400	350	300
digital encoder resolution(X1000)	Counts/rev	1200000	1672000	2260000
SINCOS encoder resolution	Cycles/rev	7500	10450	14125
Accuracy	arc sec	+/-10.0	+/-7.0	+/-5.0
Repeatability	arc sec	+/-1.1	+/-0.78	+/-0.57
Axial load rating	N	150	230	300
Moment load rating	Nm	14.7	31.7	55.2
Radial run-out	um	15 (10,5) [1]	18 (10,5) [1]	18 (10,5) [1]
Axial run-out	um	15 (10,5) [1]	18 (10,5) [1]	18 (10,5) [1]

1. Optional.
2. Terminal to terminal, at 25 Deg C.

ACW120

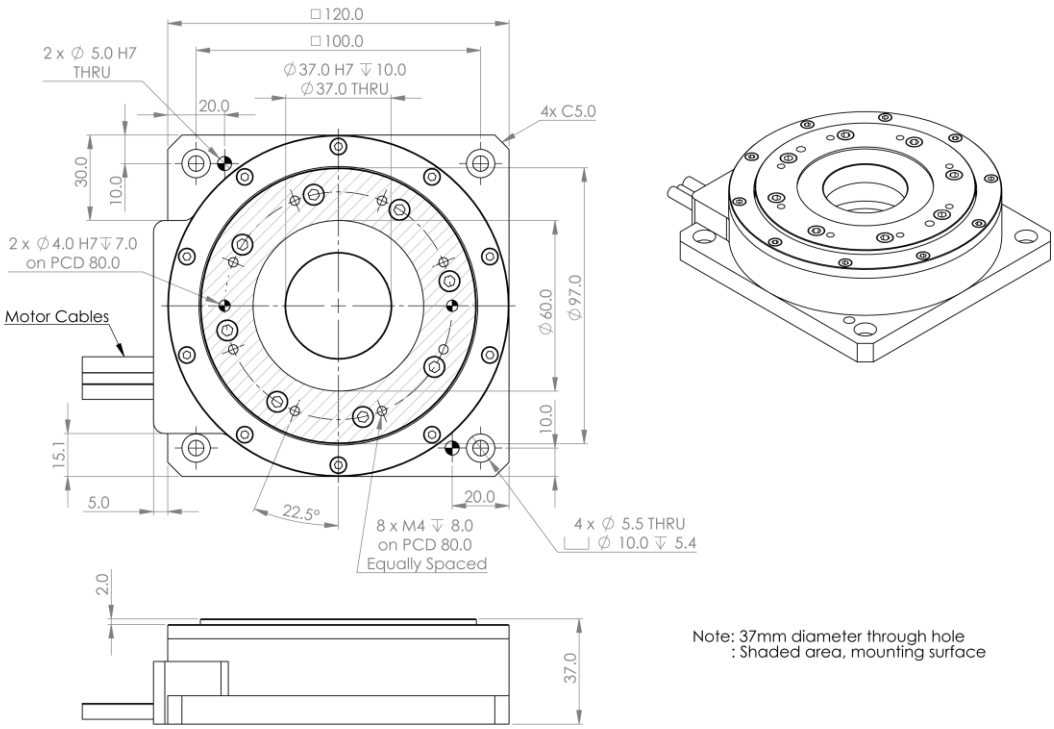

ACW170

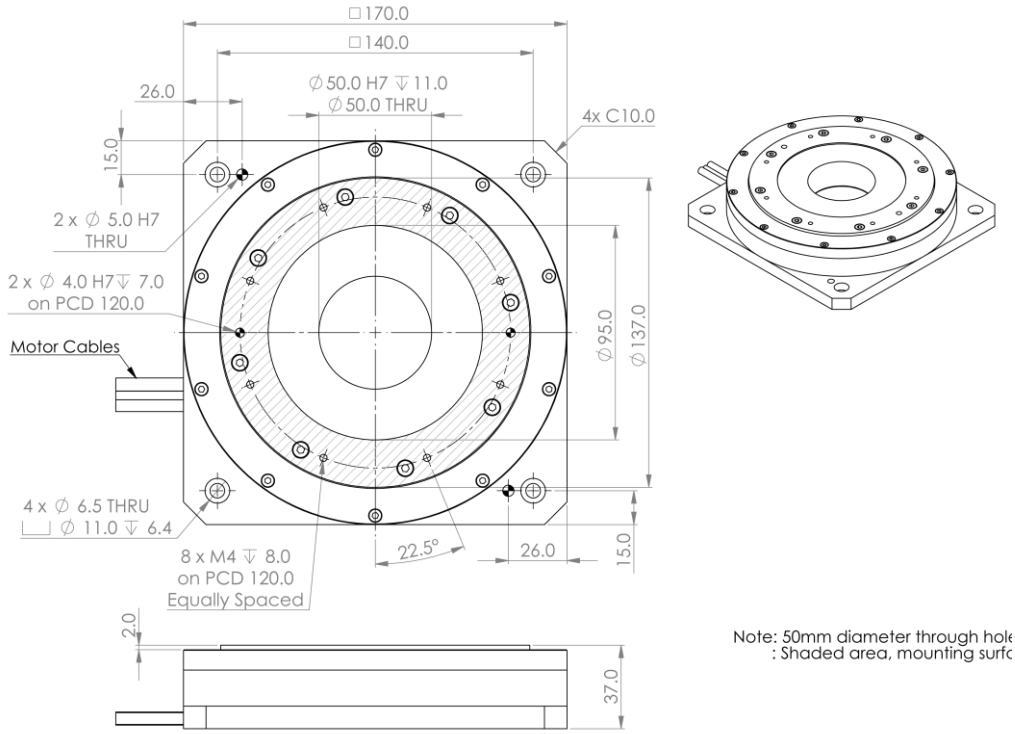

ACW220

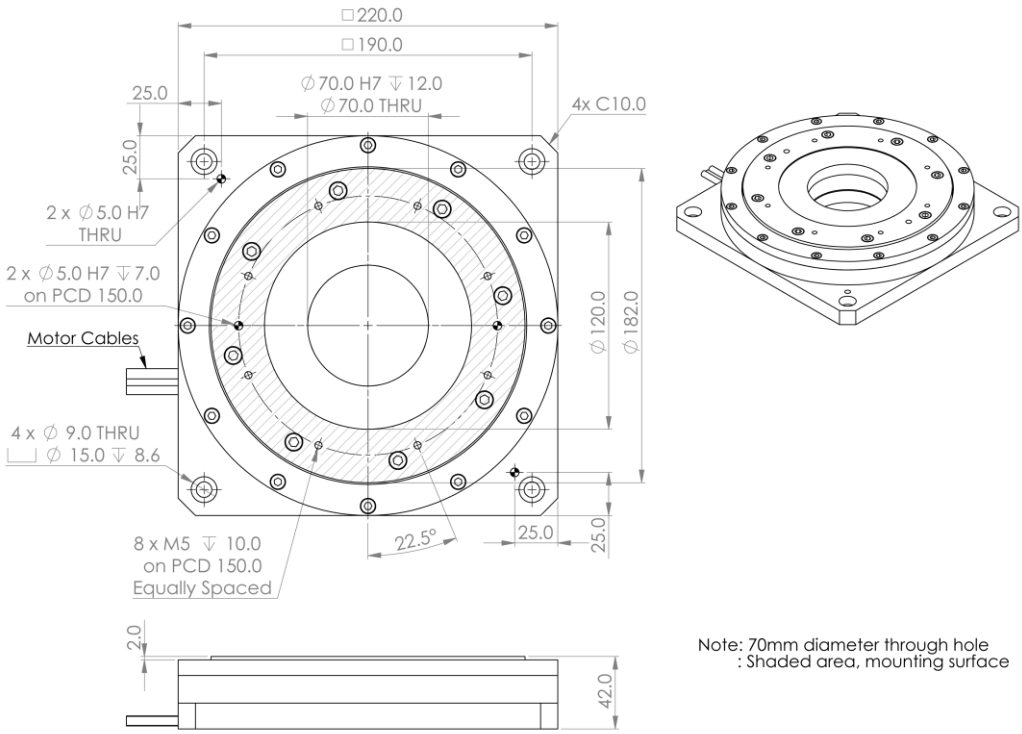

Part Numbering

Motor	Height	Winding	Thermal Sensor	Cable Length	Encoder Option	Interpolation Option	Run-out Option
ACW 120	37	p	J/K	3.0	AM-300	1000 X SINCOS	P10/P5
ACW 170	37				AM-418		P10/P5
ACW 220	42				AM-565		P18/P10/P5

K-PT100 (RTD)

Example: ACW 170-37-P-J-3.0-AM-300-1000X

Connector Pin Assignment

ACW

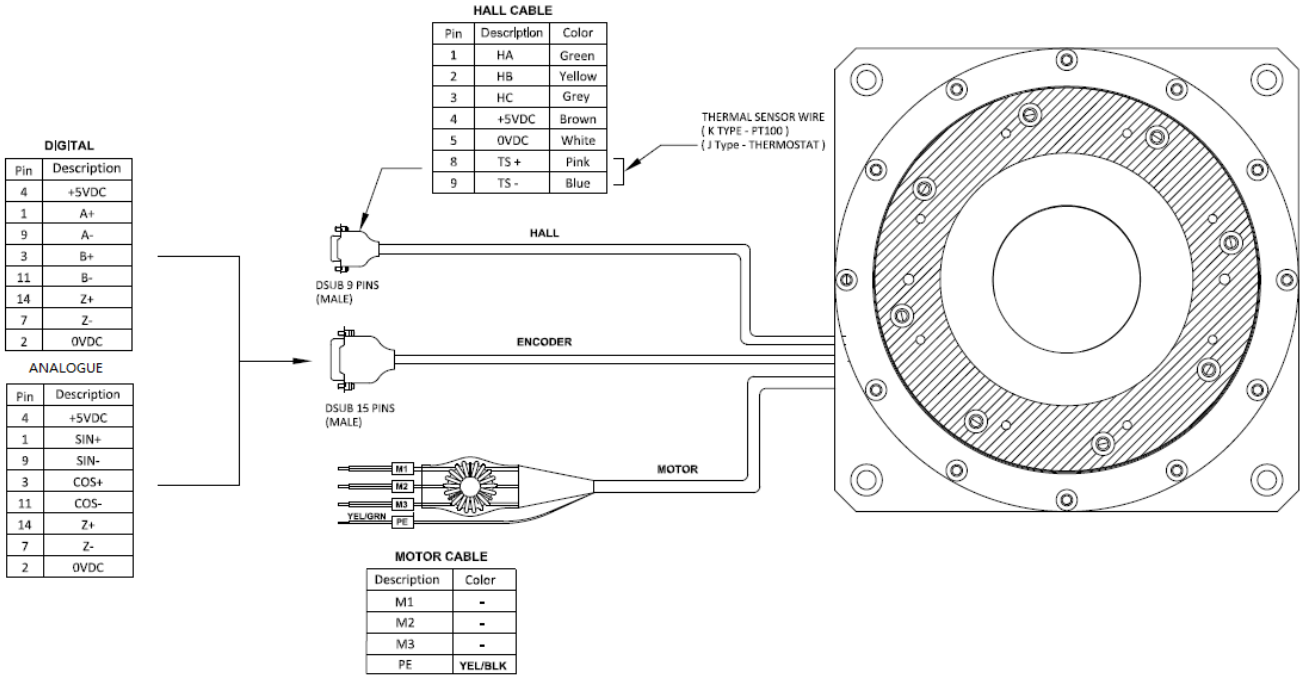

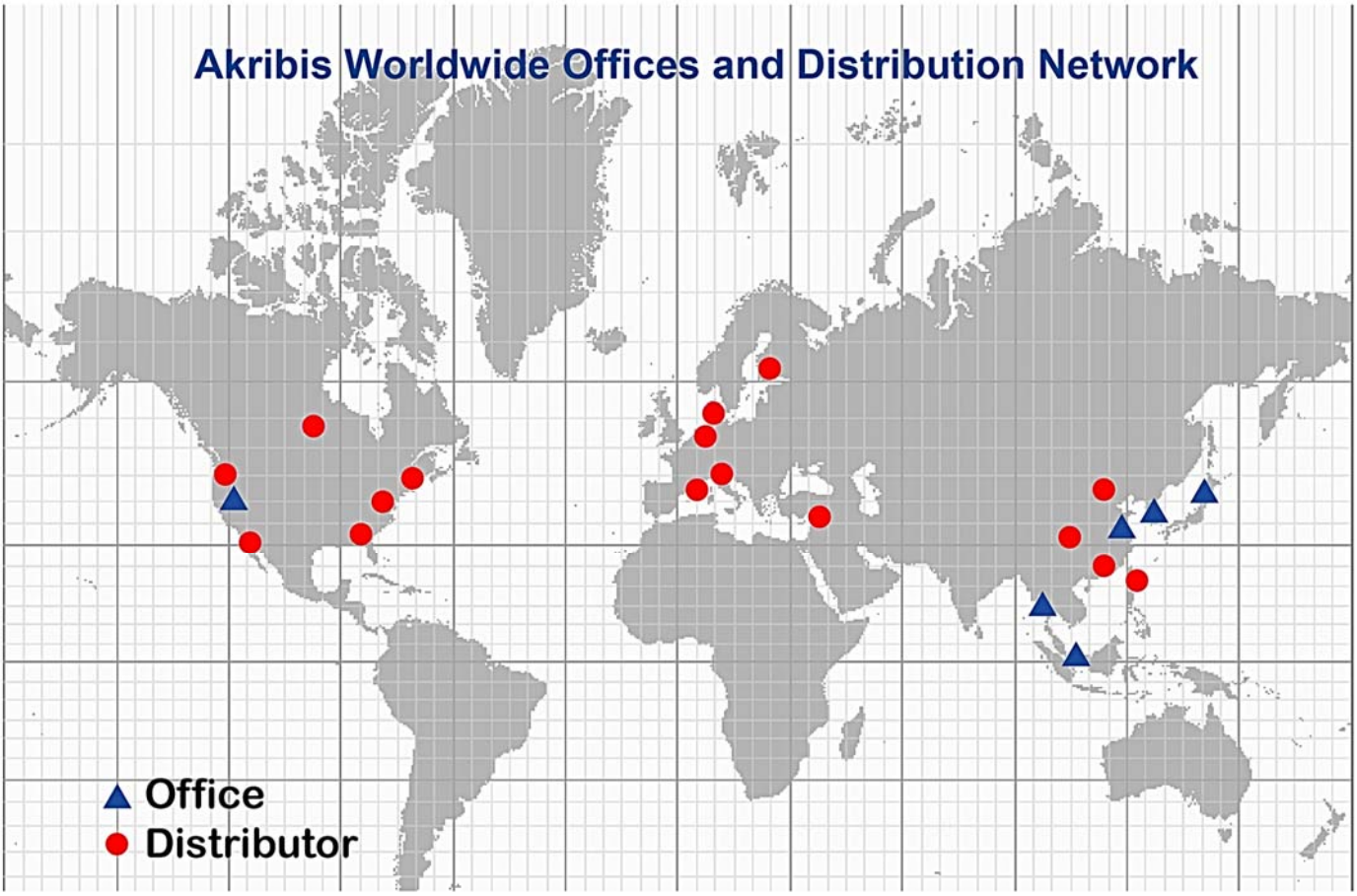

Headquarters:
Akribis Systems (Singapore)
5012 Techplace II Ang Mo Kio Ave 5
#01-05 Singapore 569876
Tel：(65) 6484 3357

Branches:
Akribis Systems (Shanghai) Co.,Ltd
No. 6999, Chuansha Road, B17-3
Pudong New Area, 201202,
Shanghai, China
Tel: (86) 21 5859 5800

Akribis Systems (Korea)
Rm #608, Bucheon Technopark 304 Dong,
Samjung-dong 365, Ojung-gu, Bucheon-si,
Gyeonggi-do, 421-741, South Korea
Tel: (82) 32 624 2115

Akribis Systems (Thailand)
132/38 Chomthong Road
Bangko Chomthong Bangkok
Thailand 10150
Tel: (66) 8515 10088

Akribis Systems (USA)
780 Montague Expressway Suite 508
San Jose, CA 95131
Tel: (1) 408 913 1300

Akribis Systems (Japan)
Okura Building 601 1-4-10 Shiba Daimon,
Minato-ku Tokyo 105-0012 Jappan
Tel: (81) 3 6450 1146

Main Contact：
cust-service@akribis-sys.com
www.akribis-sys.com