EconoMotion®

HepcoMotion EconoMotion® is an economical range of vee bearings for use in medium duty linear and rotary applications. The vee bearings incorporate a deep groove precision ground ball bearing with vee profile in the outer race. The bearings are provided with metal shields and are lubricated for life. The integral fixing studs are manufactured from 45 ton condition high tensile steel supplied chemically blacked.

EconoMotion® bearing

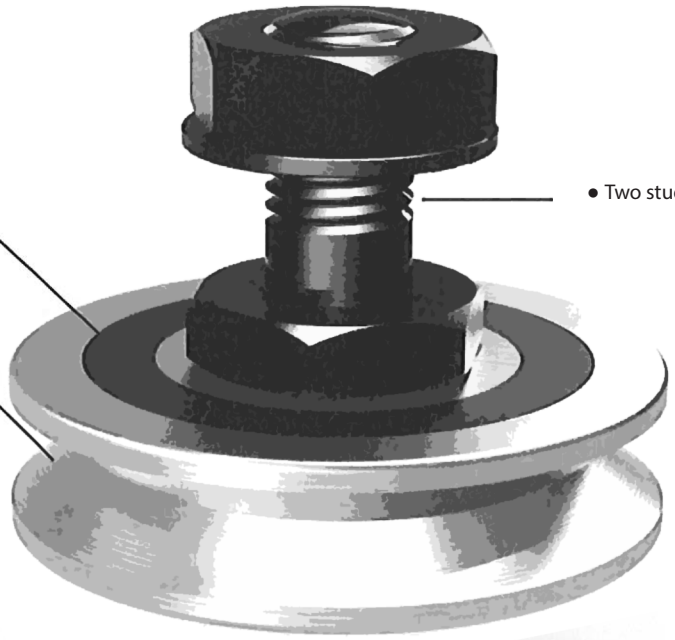

- Metal shields
- Two stud lengths available in each size
- Single piece ground bearing with deep vee groove and precision clearance
- Compact design
- Eccentric bearing option provides simple means of adjustment

How to Order

Questions?

Sold & Serviced By:
ELECTROMATE
Toll Free Phone (877) SERVO98
Toll Free Fax (877) SERVO99
www.electromate.com
sales@electromate.com

EconoMotion®

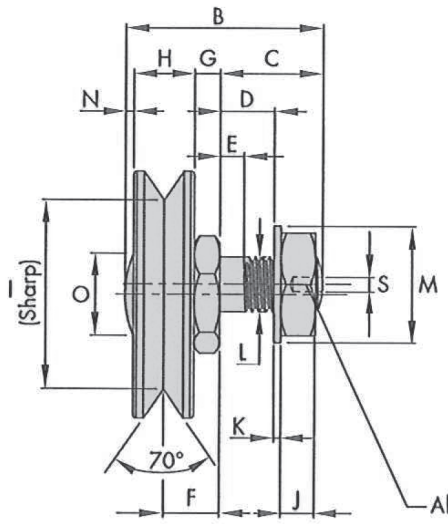

Short stud (SJ) / Long stud (LJ)

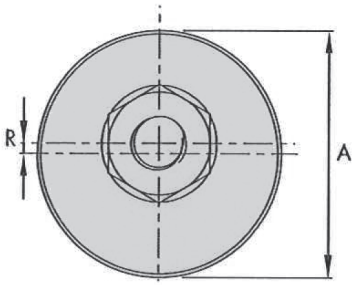

Eccentric (E)

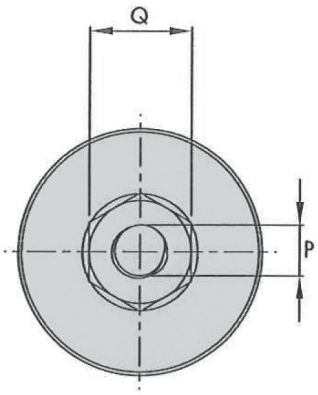

Concentric (C)

PART NO.		A	B	C	D	E	F +0.03/-0.05	G	H	I Theoretical Sharp	J	K
SJ	265C/E	26.5	25.5	14	8	3	6.8	3.3	7	19.98	5	0.8
LJ			32.5	21	15	6						
SJ	360C/E	36	29	15	8	4	8.3	3.8	9	27.57	5	1.0
LJ			41	27	20	8						
SJ	580C/E	58	47	24	14	6	14.3	7.3	14	46.08	7	1.6
LJ			58	35	25	12						

PART NO.		L	M	N	O	P +0.00/-0.03	F +0.03/-0.05	Eccentric Only		Adjusting Wrench	Socket Tool	MASS ~ g
								R	S			
SJ	265C/E	M6X0.75	1.0	1.0	1.0	1.0	13	1.3	2.5	AS7	RT6	29
LJ												31
SJ	360C/E	M8X1.0	1.2	12	1.2	1.2	15	1.5	3	AS10	RT8	65
LJ												68
SJ	580C/E	M12X1.5	24	1.5	23.5	12	30	1.7	5	AS20	RT12	290
LJ												298

Ordering Details

Simply specify the part numbers and quantities required.

Example: 2 x LJ265E — Long stud eccentric bearing assembly

2 x LJ265C — Long stud concentric bearing assembly

Notes:

1. Recommended drilling sizes for mounting bearing assemblies, are nominal 'P' dimension (refer to chart) +0.1mm
2. EconoMotion bearings are compatible with 70 degree vee linear slides from the HepcoMotion GV3 range, and ring slides from the PRT2 range. The user should select components whose vee sizes are compatible.

Sold & Serviced By:
ELECTROMATE
Toll Free Phone (877) SERV098
Toll Free Fax (877) SERV099
www.electromate.com
sales@electromate.com