Technical Data Sheet

Linear Piezomotor LAS Series

The LAS linear piezo motor represents a quantum leap in the design of small size high-performance DC motors. Manufactured from light weight reinforced engineering thermoplastics with a precision linear slide, this motor provides superior precision and ultrafast response/start-stop characteristics with an affordable design. Highly energy efficient, the motor consumes zero power in hold position while still providing significant force. Available in a variety of configurations it is the ideal choice for OEM applications where superior performance and competitive unit cost are important factors.

Motor Specifications	Standard	Encoder
Mode of Operation	Stepping & Continuous	
Push/Pull Force	>0.2N	
Self Braking Force	>0.25N	
Response Time	10µs to 30µs	
Velocity Range	0 to 0.2 m/s	0.01 to 100mm/s
Travel Range	10 mm	
Minimum Linear Step (resolution)	<0.04 µm	<0.04 µm
Minimum controlled Linear Step	N/A	34 µm
Dynamic Range	4 kHz	
Bi-Directional Repeatability	N/A	±30 µm
Angular Hysteresis at Direction Change	< 2 arc.min	< 2 arc.min
Supply Voltage for Driver	5 VDC	
Operating Temperature	-20° to 80°C	
Max Current over velocity range	100mA	Note 1
Motor Weight	4g	6g
Motor Dimensions (mm)	16.3x15x5.7	16.3x30x9
Driver PCB Dimensions (mm)	20x25	40x25
Control	Open loop	Closed loop

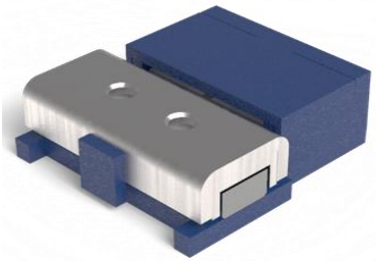

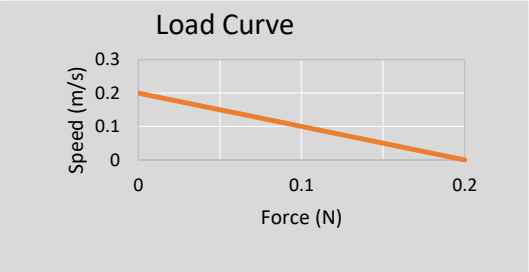

Note 1: Maximum current in continous mode. Use of PWM with different duty will proportionally reduce average current.

Principle of Operation

DTI' s linear piezomotors work on a patented principle of excitation of ultrasonic standing waves within a piezoelectric resonator. The resulting superposition of two orthogonal ultrasonic waves causes linear movement of the motor (for more details visit www.dtimotors.com). DTI's electronic driver's have been designed to provide an economical user-control interface. Each driver PCB is supplied pre-programmed for the specific motor model. The LAS can be controlled in open-loop mode using standard PWM (pulse width modulation). Closed loop control of the motor is achieved via an optical encoder mounted on the back of the motor. Refer to the Electronic Driver 'ED' technical data sheet for full details of Electronic Drivers.

Performance and Key benefits vs. Electromagnetic Motors

Improved Resolution:	With a control step size of just 0.04 µm at full thrust or holding force these linear motors offer 25,000 steps per mm of control.
Faster reaction time:	Within 10µs to 30µs the Piezomotor has made its first step and motion has commenced compared to a stepper motor with typical 5ms to start motion.
High Force Density	For its size and weight these motors offer superior force density, particularly when compared with stepper and lead screw solutions.
Energy and Cost Saving	The Piezomotor consumes zero power at holding force and very low power at slow speed (0.025W at 0.5 mm/s), yielding the possibility of very efficient overal duty.
Special Properties	The Piezomotor is immune to EM and RF interference and has no emissions.
Economical Design	The innovative design and Patent protected technology packaged in stable reinforced engineering thermoplastic makes this high performance technology affordable for OEM equipment designers.
Lightweight	The Piezomotor contains no copper windings, iron laminations or permanent magnets and is significantly more powerful by weight than EM solutions. This makes them ideally suited to weight critial applications.

6968 Professional Pkwy E. Sarasota, Florida 34240

Dimensional Drawings

Standard Model

dimensions in mm

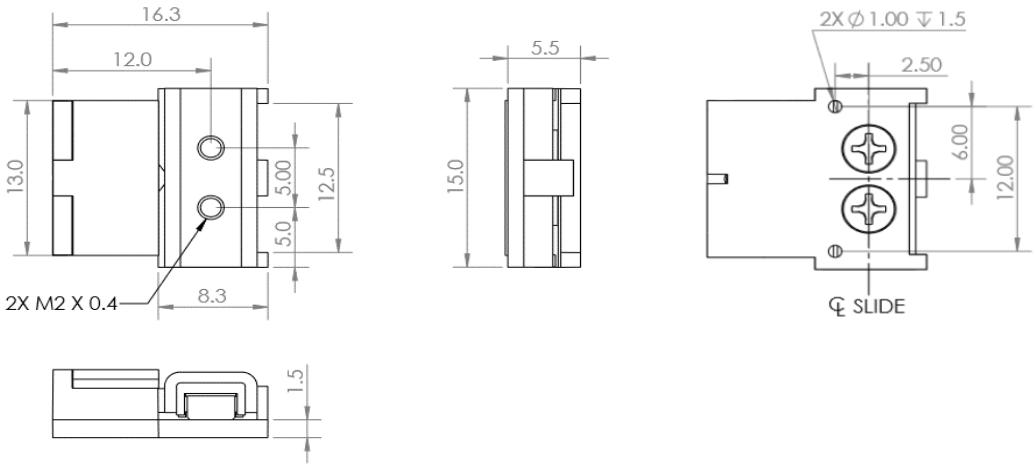

Encoder Model

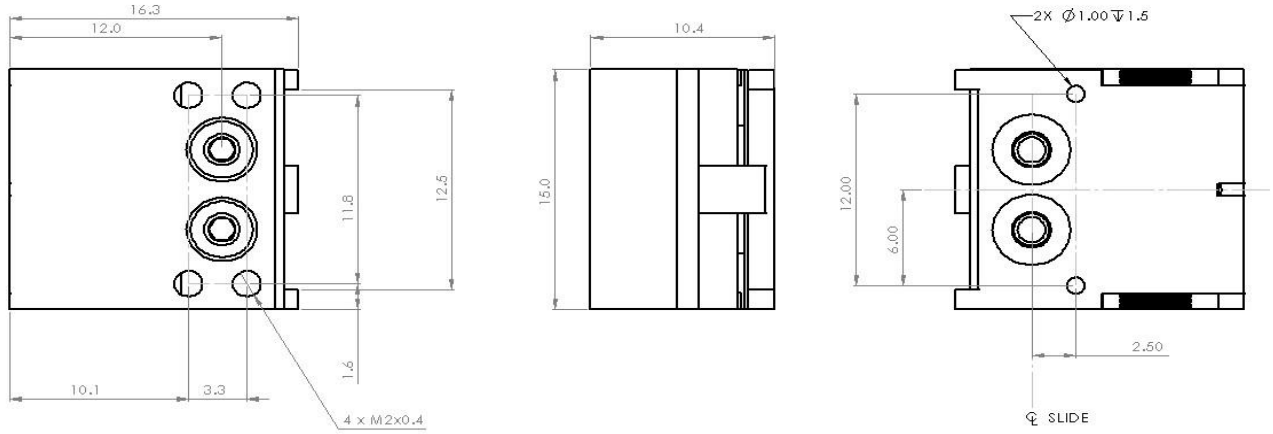

Motor Control

Control of DTI Piezomotors is straightforward. Each motor requires a driver board which will convert motion input instructions to the necessary electrical processes with specific frequency and amplitude to create excitation of the piezo resonator and make the motor perform the motion path instructed.

Open Loop Control with PWM

The LAS motor can be manually controlled to move in either direction with two pushbuttons on the Driver PCB. Alternatively, the motor can be controlled using an external signal source via PWM (Pulse Width Modulation) mode. Control signals are applied to Pin 2 or Pin 3 on the External Input Control Connector (see Figure). The mode of travel, Stepping or Continuous, depends on the type of signal applied to the External Input Connector. A constant "high" level (D.C.) signal will result in continuous motion at maximum speed until it reaches a mechanical stop at either end of the motor. A pulse or pulse train will result in stepping operation. In the stepping mode (PWM), the size of each step is determined by the pulse duration, and the speed of travel is determined by the pulse repetition rate. The minimum pulse duration is around 10-15 µs. The maximum repetition rate F, measured in Hertz, is determined by

Closed Loop Control with Encoder

For close loop control of the LAS motor with a DTI installed encoder, the user must close the loop by using the feedback signals from the encoder connectors (this information is provided in the LAS product user manual).

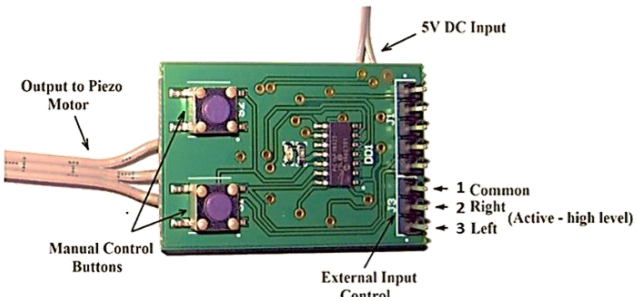

Control Architecture

The LAS series of linear motors are available as a basic (open loop) motor or with a DTI fitted encoder.

The LAS can be simply controlled using PWM in either open loop or close loop mode.

	Open Loop Driver
Base Motor	Open Loop Control or 3rd Party controller command motor with PWM control and close control loop with external sensor
Motor with Encoder	Open Loop Control or 3rd Party controller commands motor with PWM control. User must close the loop by using the feedback signals from the encoder connectors (this information is provided in the LAS product user manual).

Ordering Information

Motor

Example: LAS20C010LAC30 is a Motor with Connector

Part Number

LAS20C010LA [ ] - [ ]

Connector and 30cm cable =	C30	E	K
15cm Wires =	W15		

E = Incremental Encoder

K = Evaluation Kit including Motor, Electronic Driver, Cables, manual (Must have C30 = Connector)

Note: The LAS motor with encoder evaluation kit includes an encoder and an open loop driver board. Until closed loop driver boards are developed customers must close the feedback loop with their own control software using the encoder output to determine position and the driver board to control the motor using PWM mode.

Electronic Driver

EDB50V005BB	Electronic Driver pcb - Open Loop board only
EDB50V005BE	Electronic Driver pcb - Open Loop, with enclosure
EDB50V005CB	Electronic Driver pcb - Closed Loop Loop board only
EDB50V005CE	Electronic Driver pcb - Closed Loop, with enclosure

Refer to Electronic Driver 'ED' Data Sheet for further information on Piezomotor control techniques and driver electronics

6968 Professional Pkwy E. Sarasota, Florida 34240