Flange Mounted Brake

Model

● 304

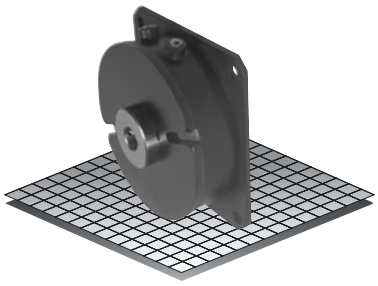

- Flange Mounted
- Spline Drive

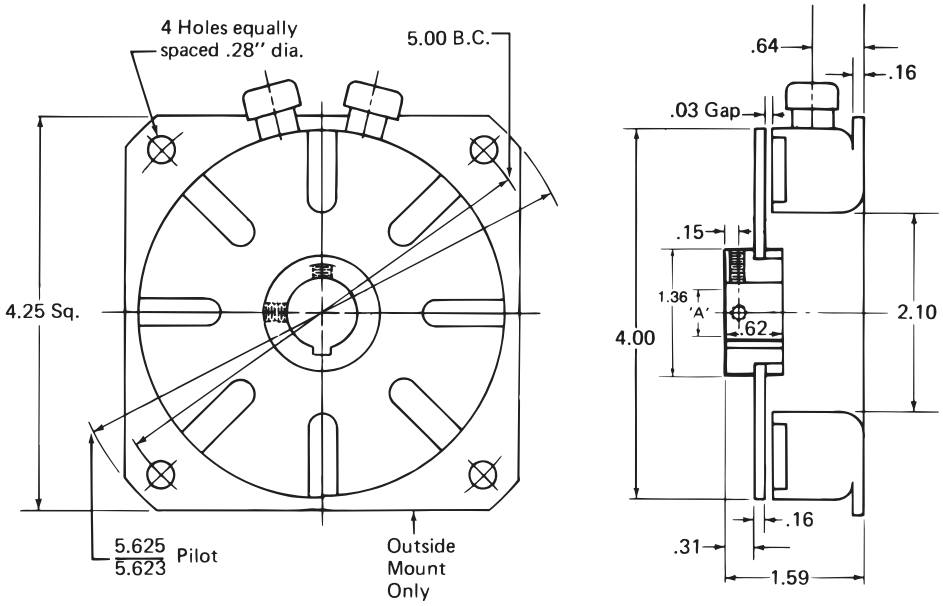

Bore "A"	Keyway
1/2"	.125 x .062
5/8"	.187 x .094
3/4"	.187 x .094
7/8"	.187 x .094
1"	.250 x .125

Technical Data and Torque (In. Lb.)

Model No.	Wt. Lbs.	Static Torque in. lb.	Max. Speed RPM	Coil Voltage vdc	* Rated Current amps	RPM									
						0	300	600	900	1200	1500	1800	2400	3000	3600
304	2.5	264	3600	90	.13	264	216	192	180	168	156	156	144	132	120

* Rated current at 90v.

Customer must maintain:

1. Concentricity between mounting flange and shaft within .006.
2. Perpendicularity between mounting surface and shaft within .006.

Refer to Section M for torque and heat dissipation curves.
Refer to Page H-18 for dimensions of Ajusto-gap®.

Order Parts for Assembly No. FC304055

	Armature Plate	Accessory	Armature Hub Assembly Magnet 1/2"	Armature Hub Assembly Magnet 5/8"	Armature Hub Assembly Magnet 3/4"	Bore Magnet
24 Volts	304390-11	326146-2	303451-3	303451-5	303453-8	304353
90 Volts	304390-11	326146-2	303451-3	303451-5	303453-8	304354

To order, specify:
1, Armature Plate
1, Magnet Accessory
1, Armature Hub Assembly of required Bore size
1, Magnet of required Voltage

For controls, see Section K.

Sold & Serviced By:
ELECTROMATE
Toll Free Phone (877) SERVO98
Toll Free Fax (877) SERV099
www.electromate.com
sales@electromate.com

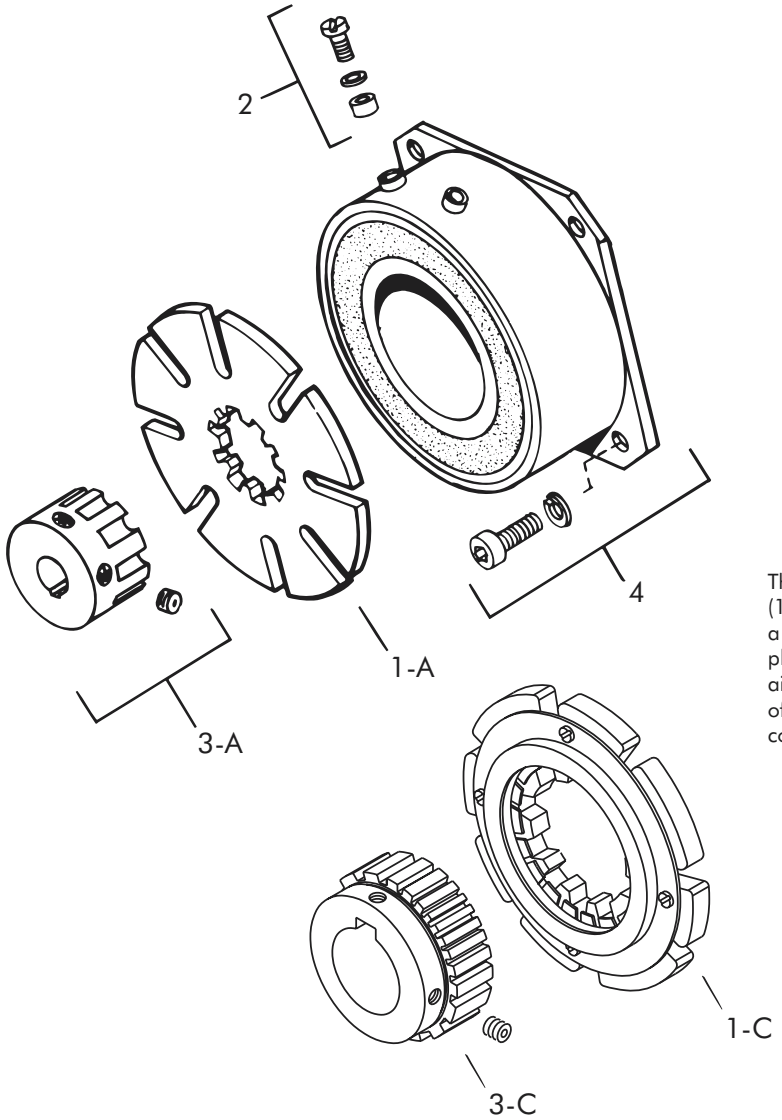

The Ajusto-gap® armature feature (1-C & 3-C) can be used to give a positive release of the armature plate while maintaining a constant air gap throughout the wear life of the unit. See page H-18 for complete information.

Replacement Parts

Item	Qty.	Description	Part No.	Item	Qty.	Description	Part No.
1-A	1	Armature Plate Assembly	304390-11	3-C	1	Ajusto-gap® Hub Assembly	
		10 Teeth (1/2" - 3/4" Bore)				7/8"	304465-4
1-C	1	Ajusto-gap® Arm. Plate Assy.				1"	304465-5
		7/8" and 1" bores	304396-8	4	1	Magnet	
2	1	Magnet Accessory	326146-2			24 Volts	304353
3-A	1	Armature Hub Assembly				90 Volts	304354
		1/2" Bore	303451-3				
		5/8" Bore	303451-5				
		3/4" Bore	303453-8				

Sold & Serviced By:
ELECTROMATE
Toll Free Phone (877) SERVO98
Toll Free Fax (877) SERVO99
www.electromate.com
sales@electromate.com