Clutch Coupling

SFC-825 Bearing Mounted

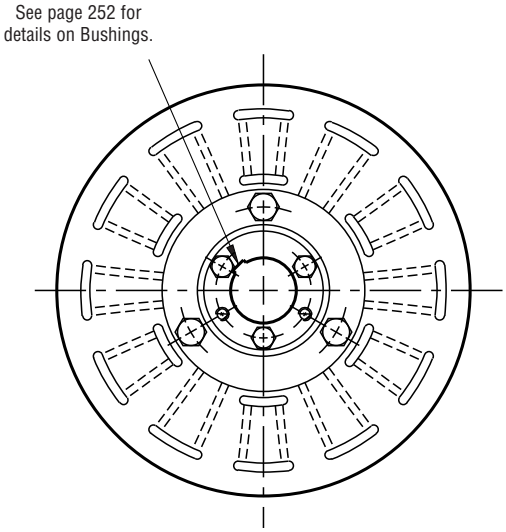

ARMATURE VIEW

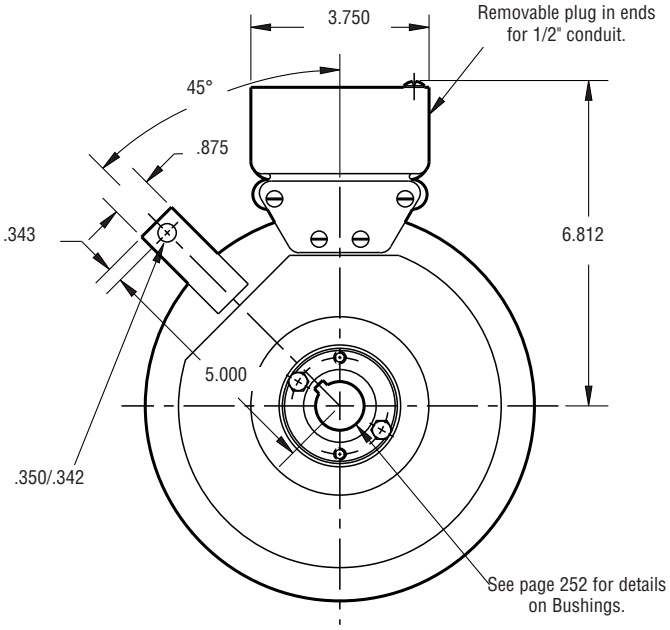

FIELD VIEW

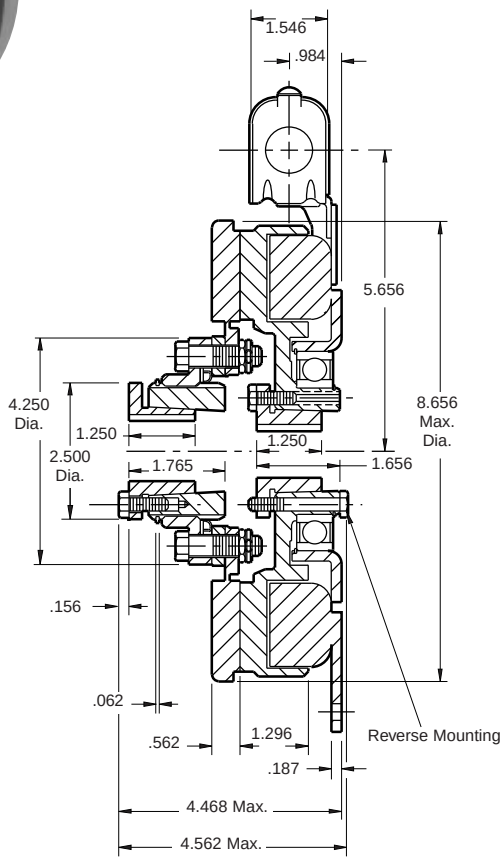

Armature Shaft	.500 – 1.500
Rotor Shaft	.500 – 1.500
Static Torque	150 lb. ft.
Maximum Speed	3,600 rpm
Standard Voltage	D.C. 6, 24, 90

All dimensions are nominal unless otherwise noted.

Information on inertia and weights begins on page 239. Coil data is on pages 250 and 251.

Customer Shall Maintain:

1. Armature mounting shaft concentric with field and rotor mounting shaft within .006 T.I.R.
2. Angular alignment of shafts within 1/2 degree.

Sold & Serviced By:
ELECTROMATE
Toll Free Phone (877) SERVO98
Toll Free Fax (877) SERV099
www.electromate.com
sales@electromate.com

SFC-825 Bearing Mounted

Drawing I-25574

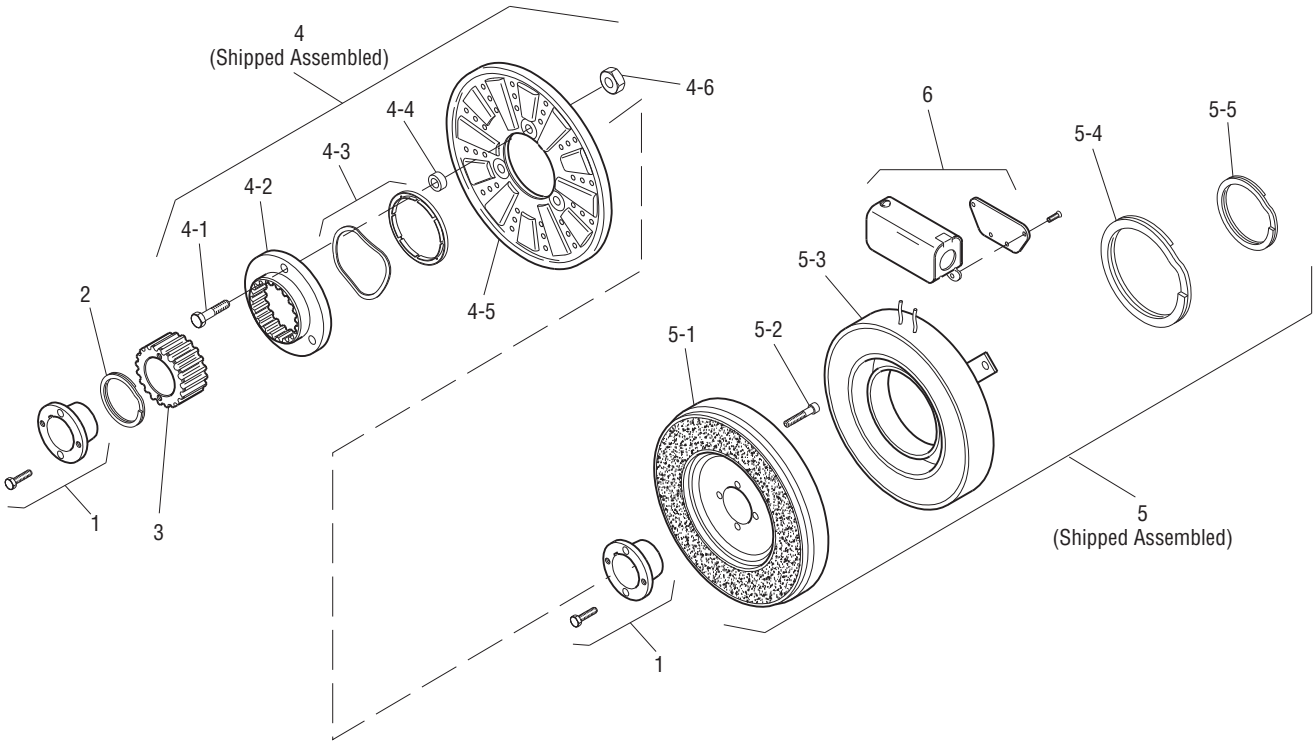

Item	Description	Part Number	Qty.
1	Bushing*		2
	1/2" to 1-1/2" Bore	180-0002 to 180-0018	
2	Retainer Ring	748-0006	1
3	Splined Hub	540-0057	1
4	Armature & Splined Adapter	5201-111-001	1
4-1	Capscrew	797-0341	3
4-2	Splined Adapter	104-0008	1
4-3	Autogap Accessory	5321-101-006	1
4-4	Spacer	748-0333	3
4-5	Armature	5321-111-022	1
4-6	Locknut	661-0004	3
5	Field & Rotor Assembly		1
	6 Volt	5201-452-002	
	24 Volt	5201-452-004	
	90 Volt	5201-452-006	
5-1	Rotor		1
	Standard Friction Material	5201-751-008	
5-2	Mounting Accessory	5201-101-005	1
5-3	Field		1
	6 Volt	5201-451-054	
	24 Volt	5201-451-056	
	90 Volt	5201-451-057	

Item	Description	Part Number	Qty.
5-4	Retainer Ring	748-0111	1
5-5	Retainer Ring	748-0016	1
6	Conduit Box	5200-101-012	1

How to Order:

1. Specify Bore Size for Item 1 (both shafts).
2. Specify Voltage for Item 5.
3. See Controls Section.

Example:

SFC-825 Clutch Coupling per I-25574 - 90 Volt, 1" Bore

These units, when used in conjunction with the correct Warner Electric conduit box, meet the standards of UL508 and are listed under guide card #NMTR, file #59164. These units are CSA certified under file #LR11543.

*See page 252 for specific part numbers.

Refer to Service Manual P-207.

Sold & Serviced By:
ELECTROMATE
Toll Free Phone (877) SERVO98
Toll Free Fax (877) SERV099
www.electromate.com
sales@electromate.com