Model 310 Clutch Per FC-310010
Model 310 Clutch Coupling Per FC-310012

Technical Data

Static Torque	300 lb. ft.	
Maximum Speed	3000 RPM	
Coil Voltage	90 vdc	**24** vdc
Rated Current	.584 amp	**2.7** amp

MODEL 310—Torque at Various RPM Points

RPM	0	300	600	900	1200	1500	1800	2400	3000
Lb. Ft.	300	262	218	174	149	133	118	87	74

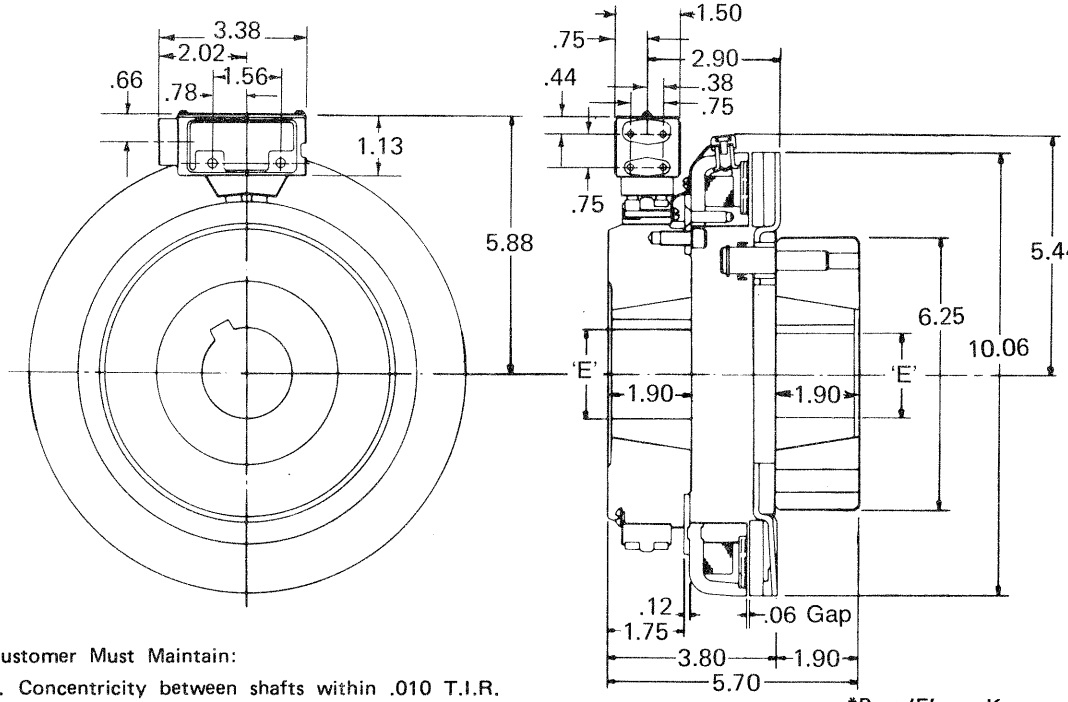

Customer Must Maintain:

1. Concentricity between shafts within .010 T.I.R.
2. Angular alignment of shafts within .010 T.I.R.
3. Composite of both within .010 T.I.R.

*Bore 'E'	Keyway
.500 - .562	.125 x .062
.625 - .875	.187 x .092
.937 - 1.250	.250 x .125
1.312 - 1.375	.312 x .156
1.437 - 1.750	.375 x .187
1.812 - 2.250	.500 x .250
2.312 - 2.500	.625 x .312

*Diameters are available in 0.062" increments.

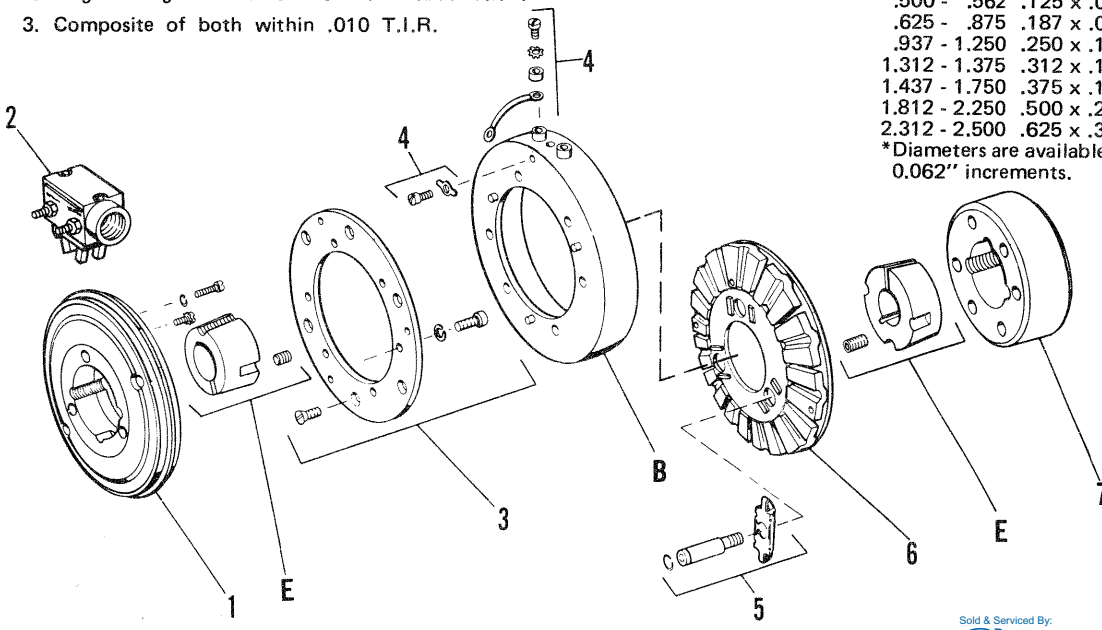

Sold & Serviced By:
ELECTROMATE
Toll Free Phone (877) SERVO98
Toll Free Fax (877) SERVO99
www.electromate.com
sales@electromate.com

Model 310 Clutch Per FC-310010
Model 310 Clutch Coupling Per FC-310012

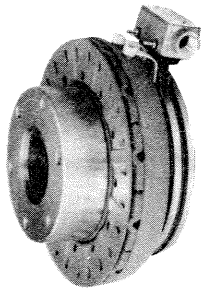

- **Rotating Field**
- **Pin Drive**

Item	Qty.	Part No.	Description
			Major Parts
1	1		Slip Ring & Hub Assembly
		310461 *	Right hand
		310471 *	Left hand (shown)
			*** Slip Ring 326012 only available see next page for details**
2	1	326019 **	Brush Holder Assembly
			**** Replaced by 326958**
			Brushes available for old style see Servoce Parts
3	1		Mounting Plate w/Accessories
		310481	Inside mounted
4	1	326136	Clutch Magnet Accessories
5	1	326075	Adjustable Gap Accessories
6	1	310380	Armature Plate Assembly
			Current Design is solid
7	1	310450	Armature Hub
B	1		Field Magnet Assembly
		310373	24 volts
		310374	90 volts
E	2	326039	Split Taper Bushing (2517)
			(See note below)
			Service Parts
2a	4	326023	Brush

Note:

Clutch coupling uses all major parts; clutch uses all but hub (7) and one bushing (E).

Data subject to change without notice.

Sold & Serviced By:
ELECTROMATE
Toll Free Phone (877) SERV098
Toll Free Fax (877) SERV099
www.electromate.com
sales@electromate.com

Dynacorp
Clutches and Brakes
The Power of Experience

326012
Slip Ring

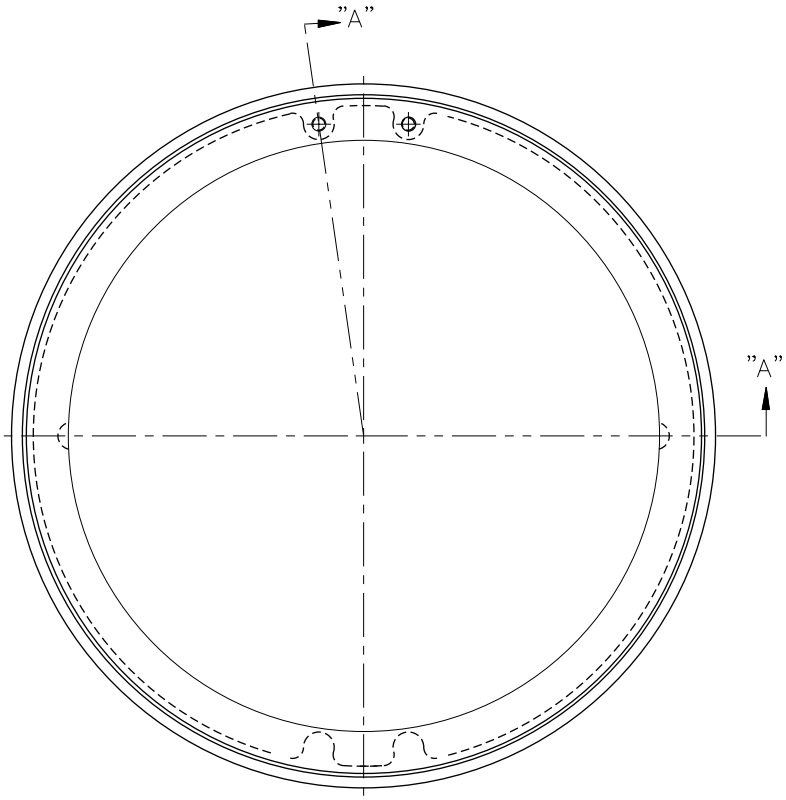

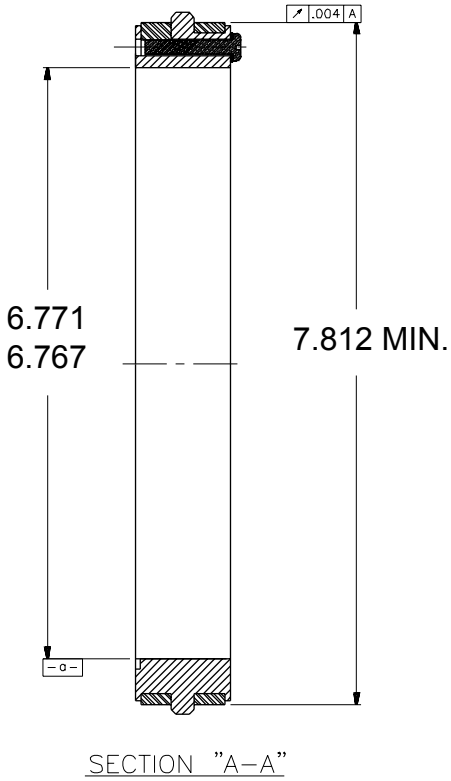

Use 326012 Slip Ring as Service Part for the following:
308461, 308471, 310461, 310471, 312461, 312471
315461, and 315471 Slip Ring and Hub Assembly

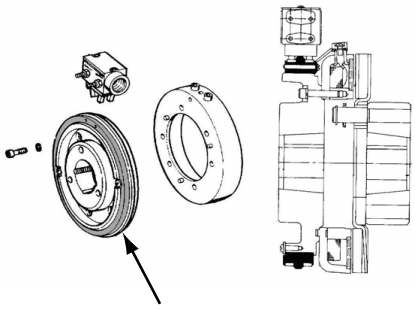

Models 308 and 310

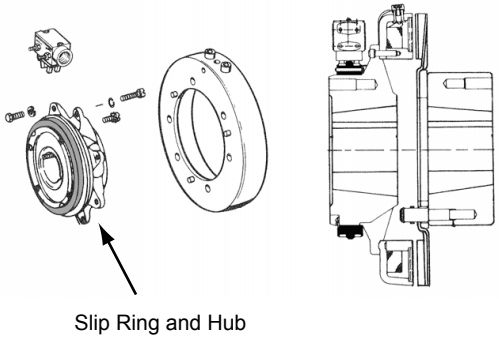

Model 312

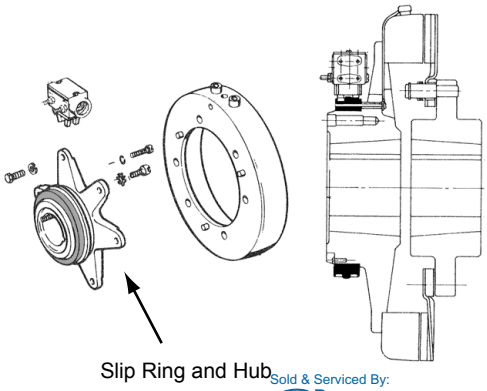

Model 315

Sold & Serviced By:
ELECTROMATE
Toll Free Phone (877) SERVO98
Toll Free Fax (877) SERVO99
www.electromate.com
sales@electromate.com