Gearhead Ordering Information

D	T	R	1	1	5	-	0	0	5	-		-	Motor Model

Motor Model Number

Gearhead Ratio
See Ratio Availability in corresponding gearhead section

Custom Options
Special = S
None = 0

Designates Gearhead Type
NT = NemaTRUE*
NTP = NemaTRUE PLUS*
NTR = NemaTRUE 90*
DT = DuraTRUE*
DTR = DuraTRUE 90*
UT = UltraTRUE*
UTR = UltraTRUE 90*
ET = EverTRUE
EQ = EQ Series

GEARHEAD SIZE

NemaTRUE NemaTRUE PLUS NemaTRUE 90	DuraTRUE DuraTRUE 90 DuraTRUE Hollow Shaft DuraTRUE Dual Shaft	UltraTRUE UltraTRUE 90		EverTRUE	EQ
17 = Size 17	60 = Size 60	006 = Size 60	014 - Size 14	10 = Size 10	23 / 60 = Size 23 / 60mm
23 = Size 23	90 = Size 90	075 = Size 75	018 - Size 18	14 = Size 14	
34 = Size 34	115 = Size 115	090 = Size 90	018t - Size 18t	18 = Size 18	
42 = Size 42	142 = Size 142	010 = Size 10	022 = Size 22		
60 = Size 60		115 = Size 115	(UltraTRUE ONLY)		
90 = Size 90					
115 = Size 115					

Sold & Serviced By:
ELECTROMATE
Toll Free Phone (877) SERVO98
Toll Free Fax (877) SERV099
www.electromate.com
sales@electromate.com

©2003 Danaher Motion. Printed in the U.S.A. The specifications in this publication are believed to be accurate and reliable. However, it is the responsibility of the product user to determine the suitability of Micron products for a specific application. While defective products will be replaced without charge if promptly returned, no liability is assumed beyond such replacement.

* Trademark of Danaher Motion. DANAHER MOTION is registered in the U.S. Patent and Trademark Office and in other countries.

NemaTRUE*

True Planetary* Gearheads

Ready for Immediate Delivery

Precision:	13 arc-minutes	**Ratio Availability:**	3:1 thru 100:1
Frame Sizes:	17, 23/60mm, 34/90mm, and 42/115mm	**Radial load capacity:**	up to 840 lb
Torque Capacity:	up to 1600 in-lb	**Mounting System:**	RediMount*

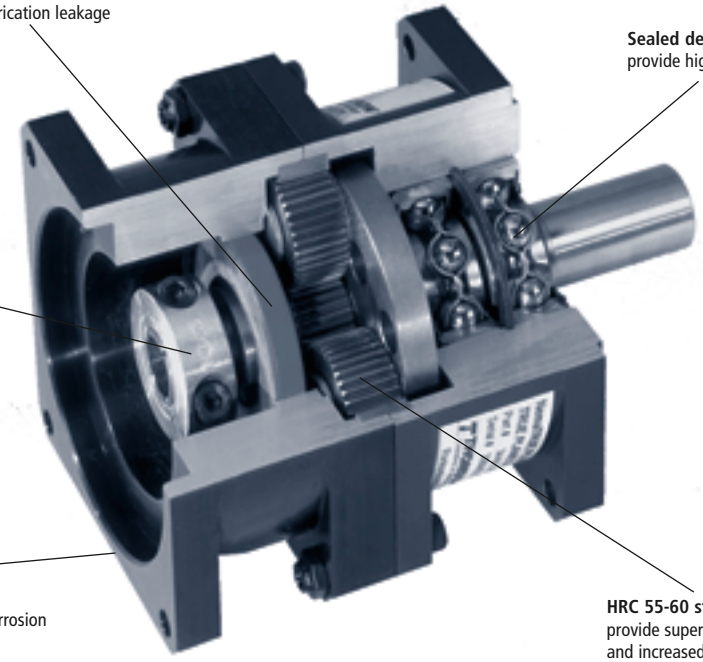

Sold & Serviced By:
ELECTROMATE
Toll Free Phone (877) SERVO98
Toll Free Fax (877) SERV099
www.electromate.com
sales@electromate.com

Index **Page**

Sizing 12
NemaTRUE 17 Planetary Gearhead 13
NemaTRUE 23/60 Planetary Gearhead 14
NemaTRUE 34/90 Planetary Gearhead 15
NemaTRUE 42/115 Planetary Gearhead 16
Selection 10
Mounting Tools 84

©2003 Danaher Motion. Printed in the U.S.A. The specifications in this publication are believed to be accurate and reliable. However, it is the responsibility of the product user to determine the suitability of Micron products for a specific application. While defective products will be replaced without charge if promptly returned, no liability is assumed beyond such replacement.

* Trademark of Danaher Motion. DANAHER MOTION is registered in the U.S. Patent and Trademark Office and in other countries.

NemaTRUE* Size 17

True Planetary* Gearheads

English

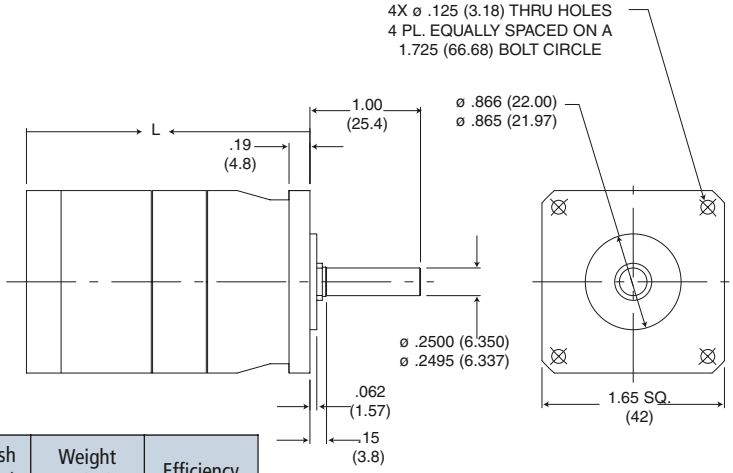

Ratio	Dimension 'L' in (mm)	Backlash (arc-min)	Weight lb (kg)	Efficiency
3:1 to 10:1	1.75 (44)	13 max	.75 (0.34)	90%
15:1 to 100:1	2.25 (57)	15 max	.95 (0.43)	85%

(TABLE 1) PERFORMANCE SPECIFICATIONS

Part Number	Ratio[1]	10,000 HOUR LIFE				T_{peak} in-lb (Nm)	J in-lb-sec^{2}x10^{-4} (kg-cm^2)	Torsonial Stiffness in-lb/arc-min (Nm/arc-min)
		T_r (1000 rpm) in-lb (Nm)	T_r (2000 rpm) in-lb (Nm)	T_r (3000 rpm) in-lb (Nm)	T_r (4000 rpm) in-lb (Nm)			
NT17-003	3:1	41 (4.7)	34 (3.8)	29 (3.3)	27 (3.1)	170 (19.2)	0.115 (0.013)	2.36 (0.268)
NT17-005	5:1	44 (5.0)	37 (4.2)	33 (3.7)	30 (3.4)	170 (19.2)	0.040 (0.005)	2.36 (0.268)
NT17-010	10:1	30 (3.4)	28 (3.1)	25 (2.8)	23 (2.6)	170 (19.2)	0.030 (0.003)	2.36 (0.268)
NT17-015	15:1	47 (5.3)	47 (5.3)	47 (5.3)	42 (4.7)	170 (19.2)	0.037 (0.004)	2.36 (0.268)
NT17-025	25:1	78 (8.8)	58 (6.6)	53 (6.0)	48 (5.5)	170 (19.2)	0.037 (0.004)	2.36 (0.268)
NT17-030	30:1	57 (6.4)	52 (5.9)	48 (5.4)	46 (5.2)	170 (19.2)	0.026 (0.003)	2.36 (0.268)
NT17-050	50:1	91 (10.3)	78 (8.8)	65 (7.4)	60 (6.7)	170 (19.2)	0.026 (0.003)	2.36 (0.268)
NT17-100	100:1	40 (4.5)	38 (4.3)	35 (4.0)	33 (3.8)	170 (19.2)	0.026 (0.003)	2.36 (0.268)

[1] Ratios are exact, higher ratios are also available, consult factory.
T_r = Rated output torque at rated speed for specific hours of life.
J = Mass moment of inertia reflected to the input shaft (including pinion assembly)
T_{peak} = Allowable momentary peak torque for emergency stop or heavy shock loading.
See page 10 for gearhead selection criteria

Sold & Serviced By:
ELECTROMATE
Toll Free Phone (877) SERVO98
Toll Free Fax (877) SERV099
www.electromate.com
sales@electromate.com

(TABLE 2) RADIAL AND AXIAL LOAD RATINGS

This graph displays the allowable radial load at a given distance (X) from the mounting surface based on an L10 life of 10,000 hours for the mean output speed n_{mout}, as described on page 10.

NT17 Radial Loadings

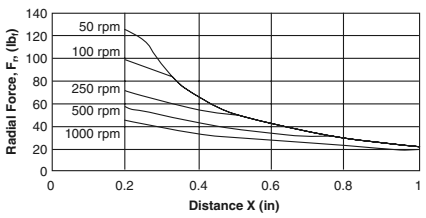

NT17 Axial Loadings

Speed (rpm)	Axial Load, F_a (lb$_f$)	N
50	237	(1054)
100	188	(836)
250	138	(614)
500	110	(489)
1000	87	(387)

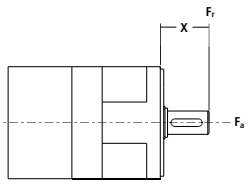

©2003 Danaher Motion. Printed in the U.S.A. The specifications in this publication are believed to be accurate and reliable. However, it is the responsibility of the product user to determine the suitability of Micron products for a specific application. While defective products will be replaced without charge if promptly returned, no liability is assumed beyond such replacement.

MICRON

* Trademark of Danaher Motion. DANAHER MOTION is registered in the U.S. Patent and Trademark Office and in other countries.

NemaTRUE* Size 23/60mm

True Planetary* Gearheads

NemaTRUE* English

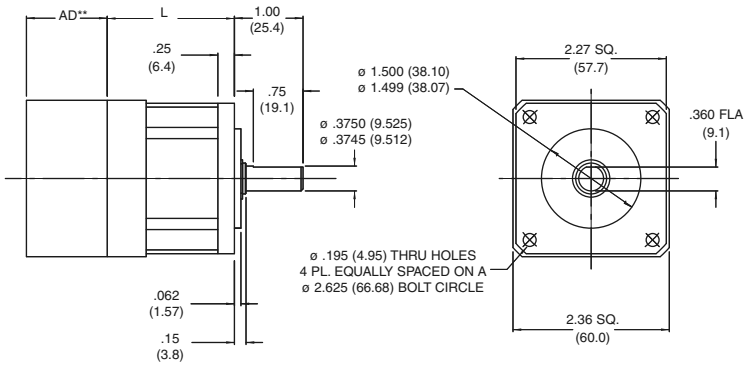

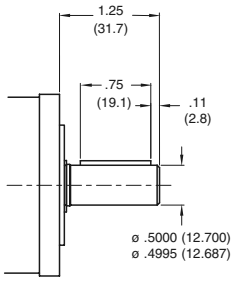

NemaTRUE PLUS* (NTP)
Heavy Duty Output Shaft

NemaTRUE* Metric

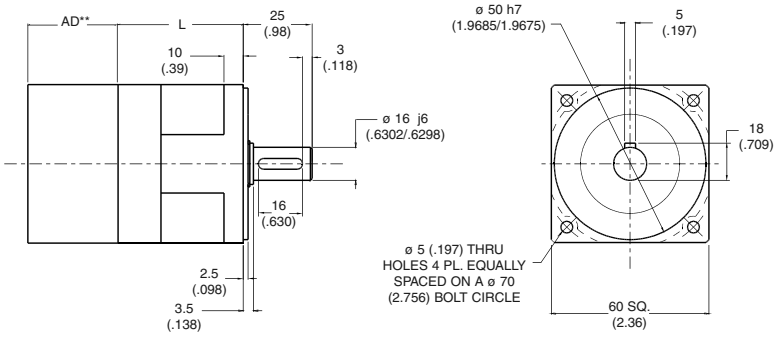

Ratio	NT23 Dimension 'L' in (in)	NT60 Dimension 'L' in (mm)	Backlash (arc-min)		Weight lb (Kg)	Efficiency
			Precision	High Precision		
3:1 to 10:1	1.92 (48.8)	2.07 (52.6)	13 max	8 max	1.5 (0.7)	90%
15:1 to 100:1	2.61 (66.3)	2.76 (70.1)	15 max	9 max	1.9 (0.9)	85%

All dimensions are: mm (inches)

AD** = Adapter length. Adapter length will vary depending on motor.

Sold & Serviced By:
ELECTROMATE
Toll Free Phone (877) SERVO98
Toll Free Fax (877) SERV099
www.electromate.com
sales@electromate.com

(TABLE 1) PERFORMANCE SPECIFICATIONS

Part Number		Ratio[1]	10,000 HOUR LIFE				T_{peak}	J	Torsonial Stiffness	
English	Metric		T_r (1000 rpm) in-lb (Nm)	T_r (2000 rpm) in-lb (Nm)	T_r (3000 rpm) in-lb (Nm)	T_r (4000 rpm) in-lb (Nm)	in-lb (Nm)	in-lb-sec^{2}x10^{-4} (kg-cm^2)	in-lb/arc-min (Nm/arc-min) NT	NTP
NT23-003	**NT60-003**	3:1	98 (11.1)	80 (9.0)	70 (7.9)	65 (7.3)	150 (16.9)	0.67 (0.076)	6.3 (0.71)	15.8 (1.8)
NT23-004	**NT60-004**	4:1	107 (12.1)	90 (10.2)	80 (9.0)	73 (8.2)	250 (28.3)	0.22 (0.024)	6.3 (0.71)	15.8 (1.8)
NT23-005	**NT60-005**	5:1	105 (11.9)	88 (9.9)	78 (8.8)	71 (8.0)	250 (28.2)	0.22 (0.025)	6.3 (0.71)	15.8 (1.8)
NT23-007	**NT60-007**	7:1	100 (11.3)	83 (9.4)	74 (8.4)	66 (7.5)	250 (28.3)	0.22 (0.024)	6.3 (0.71)	15.8 (1.8)
NT23-010	**NT60-010**	10:1	163 (7.1)	58 (6.6)	54 (6.1)	52 (5.9)	250 (28.2)	0.14 (0.016)	6.3 (0.71)	15.8 (1.8)
NT23-015	**NT60-015**	15:1	124 (14.0)	110 (12.4)	105 (11.9)	100 (11.3)	250 (28.3)	0.21 (0.024)	6.3 (0.71)	15.8 (1.8)
NT23-020	**NT60-020**	20:1	180 (20.3)	147 (16.6)	130 (14.7)	120 (13.6)	275 (31.1)	0.21 (0.024)	6.3 (0.71)	15.8 (1.8)
NT23-025	**NT60-025**	25:1	175 (9.8)	142 (16.0)	125 (14.1)	115 (13.0)	250 (28.3)	0.21 (0.024)	6.3 (0.71)	15.8 (1.8)
NT23-030	**NT60-030**	30:1	207 (23.4)	182 (20.6)	157 (17.7)	147 (16.6)	275 (31.1)	0.13 (0.015)	6.3 (0.71)	15.8 (1.8)
NT23-040	**NT60-040**	40:1	207 (23.4)	182 (20.6)	157 (17.7)	147 (16.6)	275 (31.1)	0.13 (0.015)	6.3 (0.71)	15.8 (1.8)
NT23-050	**NT60-050**	50:1	202 (22.8)	175 (19.8)	152 (17.2)	142 (16.0)	275 (31.1)	0.13 (0.015)	6.3 (0.71)	15.8 (1.8)
NT23-070	**NT60-070**	70:1	197 (22.3)	172 (19.4)	147 (16.6)	137 (15.5)	275 (31.1)	0.13 (0.015)	6.3 (0.71)	15.8 (1.8)
NT23-100	**NT60-100**	100:1	85 (9.6)	79 (8.9)	74 (8.9)	73 (8.2)	275 (31.1)	0.13 (0.015)	6.3 (0.71)	15.8 (1.8)

[1] Ratios are exact, higher ratios are also available, consult factory.
T_r = Rated output torque at rated speed for specific hours of life.
J = Mass moment of inertia reflected to the input shaft (including pinion assembly)
T_{peak} = Allowable momentary peak torque for emergency stop or heavy shock loading.
See page 10 for gearhead selection criteria

Available in 24 hours through the Micron Gearhead Express program

©2003 Danaher Motion. Printed in the U.S.A. The specifications in this publication are believed to be accurate and reliable. However, it is the responsibility of the product user to determine the suitability of Micron products for a specific application. While defective products will be replaced without charge if promptly returned, no liability is assumed beyond such replacement.

* Trademark of Danaher Motion. DANAHER MOTION is registered in the U.S. Patent and Trademark Office and in other countries.

NemaTRUE* Size 34/90mm

True Planetary* Gearheads

NemaTRUE* English

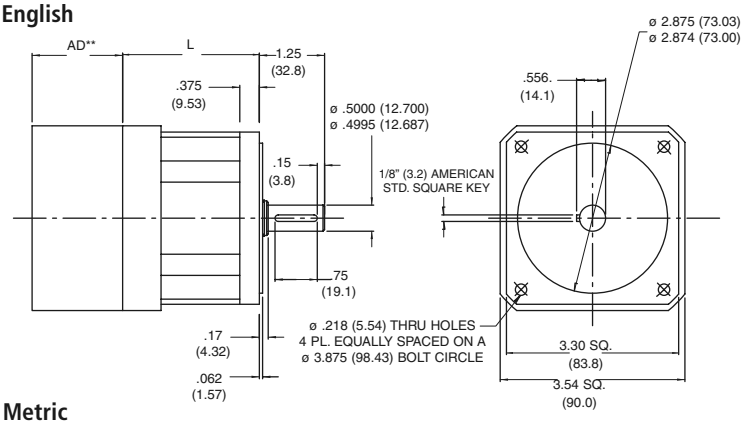

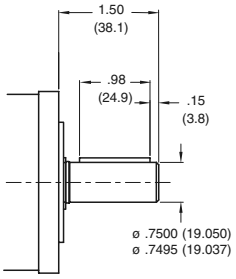

NemaTRUE PLUS* (NTP)
Heavy Duty Output Shaft

NemaTRUE* Metric

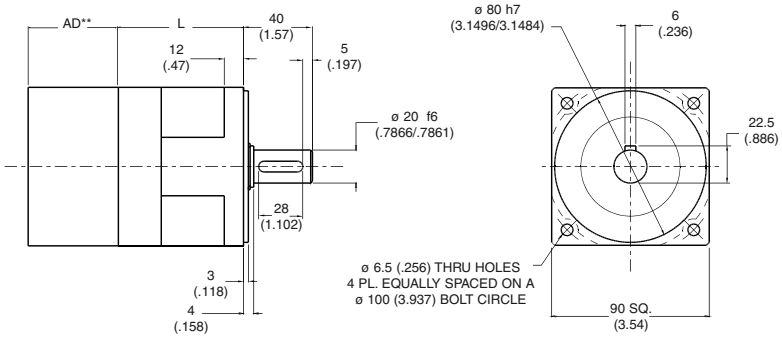

Ratio	NT34 Dimension 'L' in (in)	NT90 Dimension 'L' in (mm)	Backlash (arc-min)		Weight lb (Kg)	Efficiency
			Precision	High Precision		
3:1 to 10:1	2.68 (68.0)	2.63 (66.8)	13 max	8 max	4.2 (1.9)	90%
15:1 to 100:1	3.53 (89.6)	3.53 (89.7)	15 max	9 max	5.6 (2.5)	85%

All dimensions are: mm (inches)
AD** = Adapter length.
Adapter length will vary depending on motor.

Sold & Serviced By:
ELECTROMATE
Toll Free Phone (877) SERVO98
Toll Free Fax (877) SERV099
www.electromate.com
sales@electromate.com

(TABLE 1) PERFORMANCE SPECIFICATIONS

Part Number		Ratio[1]	10,000 HOUR LIFE				T_{peak}	J	Torsonial Stiffness	
English	Metric		T_r (1000 rpm) in-lb (Nm)	T_r (2000 rpm) in-lb (Nm)	T_r (3000 rpm) in-lb (Nm)	T_r (4000 rpm) in-lb (Nm)	in-lb (Nm)	in-lb-sec^{2}x10^{-4} (kg-cm^2)	in-lb/arc-min (Nm/arc-min) NT	NTP
NT34-003	**NT90-003**	3:1	360 (40.7)	320 (36.2)	295 (33.3)	270 (30.5)	510 (57.6)	3.9 (0.44)	16.8 (1.9)	48 (5.4)
NT34-004	**NT90-004**	4:1	515 (58.2)	425 (48.0)	380 (42.9)	350 (39.6)	700 (79.1)	1.20 (0.140)	16.8 (1.9)	48 (5.4)
NT34-005	**NT90-005**	5:1	490 (55.4)	400 (45.2)	355 (40.1)	325 (36.7)	700 (79.1)	1.20 (0.140)	16.8 (1.9)	48 (5.4)
NT34-007	**NT90-007**	7:1	470 (53.1)	380 (42.9)	335 (37.9)	305 (34.5)	700 (79.1)	1.20 (0.140)	16.8 (1.9)	48 (5.4)
NT34-010	**NT90-010**	10:1	238 (26.9)	212 (24.0)	200 (22.6)	192 (21.7)	700 (79.1)	0.66 (0.075)	16.8 (1.9)	48 (5.4)
NT34-015	**NT90-015**	15:1	454 (51.3)	416 (47.0)	391 (44.2)	373 (42.1)	850 (96.0)	1.20 (0.140)	16.8 (1.9)	48 (5.4)
NT34-020	**NT90-020**	20:1	677 (76.5)	620 (70.1)	587 (66.3)	551 (62.3)	850 (96.1)	1.20 (0.140)	16.8 (1.9)	48 (5.4)
NT34-025	**NT90-025**	25:1	652 (73.7)	595 (67.2)	562 (63.5)	526 (59.4)	850 (96.0)	1.20 (0.140)	16.8 (1.9)	48 (5.4)
NT34-030	**NT90-030**	30:1	500 (56.5)	454 (51.3)	432 (48.8)	416 (47.0)	850 (96.0)	0.66 (0.075)	16.8 (1.9)	48 (5.4)
NT34-040	**NT90-040**	40:1	770 (87.0)	702 (79.3)	668 (75.5)	620 (70.1)	850 (96.1)	0.65 (0.074)	16.8 (1.9)	48 (5.4)
NT34-050	**NT90-050**	50:1	720 (81.4)	652 (73.7)	618 (69.8)	595 (67.2)	850 (96.0)	0.65 (0.074)	16.8 (1.9)	48 (5.4)
NT34-070	**NT90-070**	70:1	770 (87.0)	702 (79.3)	668 (75.5)	620 (70.1)	850 (96.1)	0.65 (0.074)	16.8 (1.9)	48 (5.4)
NT34-100	**NT90-100**	100:1	325 (36.7)	295 (33.3)	280 (31.6)	270 (30.5)	700 (79.1)	0.65 (0.074)	16.8 (1.9)	48 (5.4)

[1] Ratios are exact, higher ratios are also available, consult factory.
T_r = Rated output torque at rated speed for specific hours of life.
J = Mass moment of inertia reflected to the input shaft (including pinion assembly)
T_{peak} = Allowable momentary peak torque for emergency stop or heavy shock loading.
See page 10 for gearhead selection criteria

Available in 24 hours through the Micron Gearhead Express program

©2003 Danaher Motion. Printed in the U.S.A. The specifications in this publication are believed to be accurate and reliable. However, it is the responsibility of the product user to determine the suitability of Micron products for a specific application. While defective products will be replaced without charge if promptly returned, no liability is assumed beyond such replacement.

MICRON

* Trademark of Danaher Motion. DANAHER MOTION is registered in the U.S. Patent and Trademark Office and in other countries.

NemaTRUE* Size 42/115mm

True Planetary* Gearheads

NemaTRUE* English

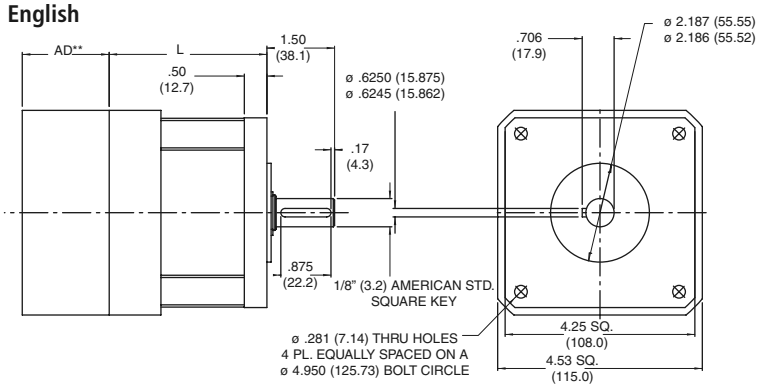

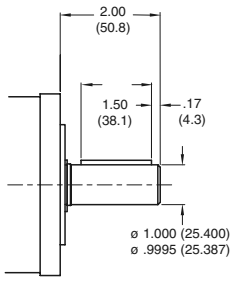

NemaTRUE PLUS* (NTP)
Heavy Duty Output Shaft

NemaTRUE* Metric

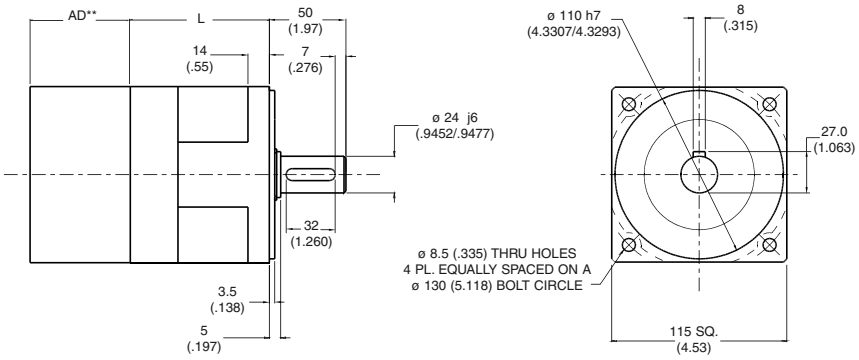

Ratio	NT42 Dimension 'L' in (in)	NT115 Dimension 'L' in (mm)	Backlash (arc-min)		Weight lb (Kg)	Efficiency
			Precision	High Precision		
3:1 to 10:1	3.49 (88.6)	3.46 (87.9)	13 max	8 max	8.9 (4.0)	90%
15:1 to 100:1	4.72 (119.9)	4.69 (119.1)	15 max	9 max	11.7 (5.3)	85%

All dimensions are: mm (inches)
AD** = Adapter length.
Adapter length will vary depending on motor.

Sold & Serviced By:
ELECTROMATE
Toll Free Phone (877) SERVO98
Toll Free Fax (877) SERV099
www.electromate.com
sales@electromate.com

(TABLE 1) PERFORMANCE SPECIFICATIONS

Part Number		Ratio[1]	10,000 HOUR LIFE				T_{peak}	J	Torsonial Stiffness	
English	Metric		T_r (1000 rpm) in-lb (Nm)	T_r (2000 rpm) in-lb (Nm)	T_r (3000 rpm) in-lb (Nm)	T_r (4000 rpm) in-lb (Nm)	in-lb (Nm)	in-lb-sec^{2}x10^{-4} (kg-cm^2)	in-lb/arc-min (Nm/arc-min)	
NT42-003	**NT115-003**	3:1	690 (78.0)	594 (67.1)	530 (59.9)	485 (54.8)	1000 (113.0)	14 (1.6)	31 (3.5)	154 (17.4)
NT42-004	**NT115-004**	4:1	850 (96.1)	698 (78.9)	622 (70.3)	570 (64.4)	1000 (113.0)	3.80 (0.43)	31 (3.5)	154 (17.4)
NT42-005	**NT115-005**	5:1	810 (55.4)	400 (45.2)	355 (40.1)	325 (36.7)	1000 (113.0)	3.80 (0.43)	31 (3.5)	154 (17.4)
NT42-007	**NT115-007**	7:1	790 (89.3)	638 (72.1)	562 (63.5)	510 (57.6)	1000 (113.0)	3.80 (0.43)	31 (3.5)	154 (17.4)
NT42-010	**NT115-010**	10:1	460 (52.0)	412 (46.6)	388 (43.8)	370 (41.8)	1000 (113.0)	1.9 (0.21)	31 (3.5)	154 (17.4)
NT42-015	**NT115-015**	15:1	454 (51.3)	416 (47.0)	391 (44.2)	373 (42.1)	1600 (180.8)	3.9 (0.44)	31 (3.5)	154 (17.4)
NT42-020	**NT115-020**	20:1	1290 (145.8)	1090 (123.2)	985 (111.3)	905 (102.3)	1600 (180.8)	3.70 (0.42)	31 (3.5)	154 (17.4)
NT42-025	**NT115-025**	25:1	1250 (141.2)	1050 (118.6)	945 (106.8)	865 (97.7)	1600 (180.8)	3.70 (0.42)	31 (3.5)	154 (17.4)
NT42-030	**NT115-030**	30:1	972 (109.8)	878 (99.2)	842 (95.1)	805 (91.0)	1600 (180.8)	1.9 (0.21)	31 (3.5)	154 (17.4)
NT42-040	**NT115-040**	40:1	1435 (162.2)	1290 (145.8)	1190 (134.5)	1090 (123.2)	1600 (180.8)	1.80 (0.20)	31 (3.5)	154 (17.4)
NT42-050	**NT115-050**	50:1	1395 (157.6)	1250 (141.2)	1150 (118.6)	1050 (118.6)	1600 (180.8)	1.80 (0.20)	31 (3.5)	154 (17.4)
NT42-070	**NT115-070**	70:1	1375 (155.4)	1230 (139.0)	1130 (127.7)	1030 (116.4)	1600 (180.8)	1.80 (0.20)	31 (3.5)	154 (17.4)
NT42-100	**NT115-100**	100:1	630 (71.2)	575 (65.0)	540 (61.0)	522 (59.0)	1200 (135.6)	1.80 (0.20)	31 (3.5)	154 (17.4)

[1] Ratios are exact, higher ratios are also available, consult factory.
T_r = Rated output torque at rated speed for specific hours of life.
J = Mass moment of inertia reflected to the input shaft (including pinion assembly)
T_{peak} = Allowable momentary peak torque for emergency stop or heavy shock loading.
See page 10 for gearhead selection criteria

Available in 24 hours through the Micron Gearhead Express program

©2003 Danaher Motion. Printed in the U.S.A. The specifications in this publication are believed to be accurate and reliable. However, it is the responsibility of the product user to determine the suitability of Micron products for a specific application. While defective products will be replaced without charge if promptly returned, no liability is assumed beyond such replacement.

* Trademark of Danaher Motion. DANAHER MOTION is registered in the U.S. Patent and Trademark Office and in other countries.

Radial and Axial Load Ratings

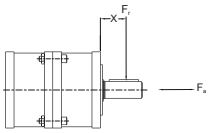

NT23, NTP23 and NT60
Allowable axial load F_a = 310 lb_f (1379N) at 250 rpm

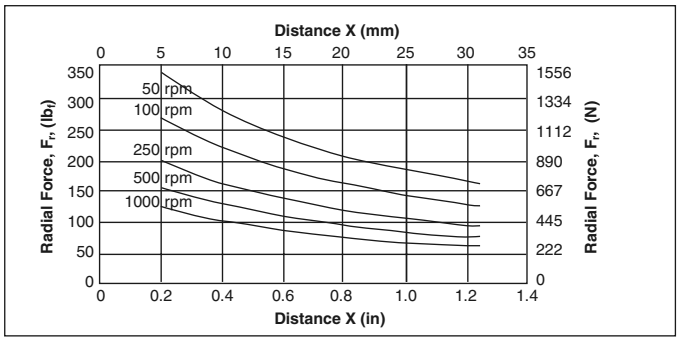

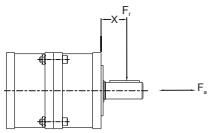

NT34, NTP34 and NT90
Allowable axial load F_a = 510 lb_f (2269N) at 250 rpm

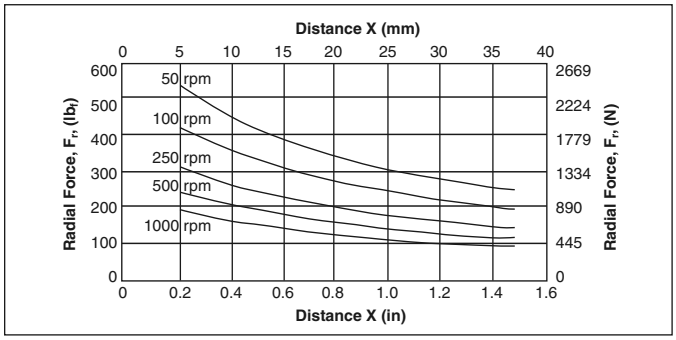

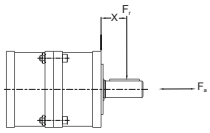

NT42, NTP42 and NT115
Allowable axial load F_a = 760 lb_f (3380N) at 250 rpm

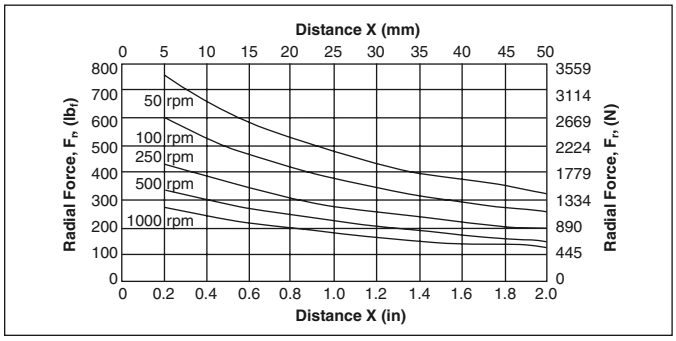

These graphs display the allowable radial load at a given distance (X) from the mounting surface based on an L_{10} life of 10,000 hours for the mean output speed n_{mout}, as described on page 10.

Sold & Serviced By:
ELECTROMATE
Toll Free Phone (877) SERVO98
Toll Free Fax (877) SERV099
www.electromate.com
sales@electromate.com

©2003 Danaher Motion. Printed in the U.S.A. The specifications in this publication are believed to be accurate and reliable. However, it is the responsibility of the product user to determine the suitability of Micron products for a specific application. While defective products will be replaced without charge if promptly returned, no liability is assumed beyond such replacement.

MICRON

* Trademark of Danaher Motion. DANAHER MOTION is registered in the U.S. Patent and Trademark Office and in other countries.

Mounting Tools
Micrometer Adjustable Torque Wrench Series

Torque Wrench Ordering Information

To ensure that the proper torque is applied to the gearhead pinion assembly, Danaher Motion offers a complete line of easy to use torque wrenches.
To order a torque wrench, ask for the corresponding part number along with your gearhead order.

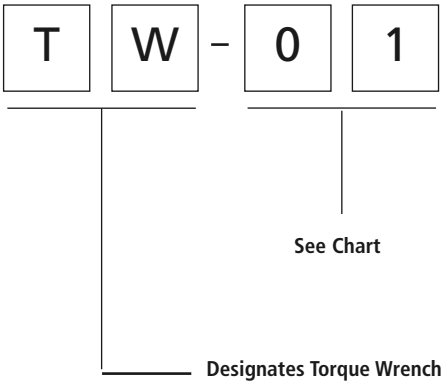

Gearhead Model	Gearhead Frame Size	Torque Wrench Part Number
NemaTRUE*	23 / 60	TW-060
	34 / 90	TW-090
	42 / 115	TW-115
NemaTRUE 90*	23	TW-060
	34	TW-090
	42	TW-115
DuraTRUE* DuraTRUE 90*	60	TW-060
	90	TW-090
	115	TW-115
	142	TW-142
UltraTRUE* UltraTRUE 90*	60	TW-006
	75	TW-075
	90	TW-075
	100	TW-010
	115	TW010
	140	TW-014
	180	TW-018
EverTRUE*	100	TW-010
	140	TW-014
	180	TW-018
EQ*	23 / 60	TW-060

Sold & Serviced By:
ELECTROMATE
Toll Free Phone (877) SERVO98
Toll Free Fax (877) SERV099
www.electromate.com
sales@electromate.com

©2003 Danaher Motion. Printed in the U.S.A. The specifications in this publication are believed to be accurate and reliable. However, it is the responsibility of the product user to determine the suitability of Micron products for a specific application. While defective products will be replaced without charge if promptly returned, no liability is assumed beyond such replacement.

MICRON

* Trademark of Danaher Motion. DANAHER MOTION is registered in the U.S. Patent and Trademark Office and in other countries.

True Planetary* Gearheads offer. . .

- **High Torque to Size Ratio** - allows compact design
- **Low Backlash** - eliminates positioning errors due to lost motion
- **Inertia Matching** - keeps servo system stable and in control
- **High Rigidity** - optimizes system response
- **Self Re-lubrication** - eliminates costly maintenance and downtime
- **High Radial Load Capacity** - mount pulleys and pinions directly on the output shaft

UltraTRUE output cage assembly*

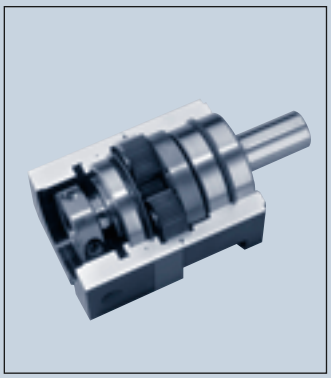

DuraTRUE in-line planetary gearhead*

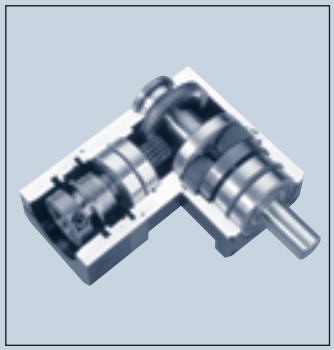

DuraTRUE 90 right angle planetary gearhead*

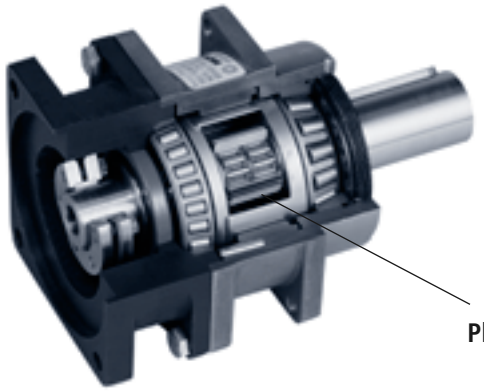

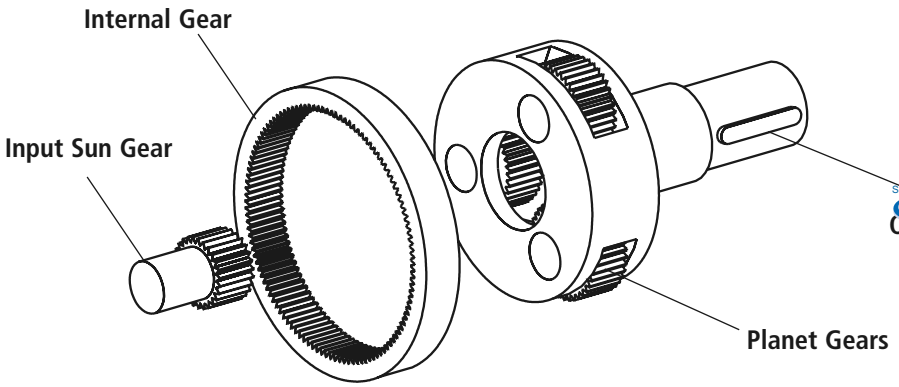

Sold & Serviced By:
ELECTROMATE
Toll Free Phone (877) SERVO98
Toll Free Fax (877) SERV099
www.electromate.com
sales@electromate.com

Product Feature	Gearhead						
	NemaTRUE*	NemaTRUE 90*	DuraTRUE*	DuraTRUE 90*	UltraTRUE*	UltraTRUE 90*	EverTRUE*
True Planetary gearing	●	●	●	●	●	●	●

©2003 Danaher Motion. Printed in the U.S.A. The specifications in this publication are believed to be accurate and reliable. However, it is the responsibility of the product user to determine the suitability of Micron products for a specific application. While defective products will be replaced without charge if promptly returned, no liability is assumed beyond such replacement.

MICRON

* Trademark of Danaher Motion. DANAHER MOTION is registered in the U.S. Patent and Trademark Office and in other countries.

Helical Crowned True Planetary* Gearing offers.....

- **High Torque Capacity**
- **Low Backlash**
- **Smooth Operation**
- **Greater Load Sharing**
- **Whisper Quiet**

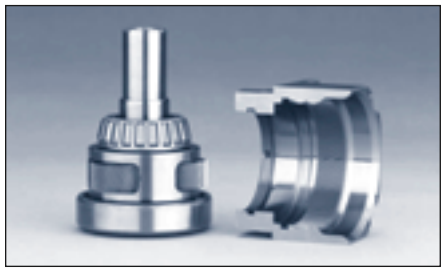

Output housing and helical internal gear are machined from a single piece of high strength steel

Helical gears are known for their quiet and smooth operation along with their ability to transmit higher loads than spur gears. Both of these features of helical gearing result from the improved contact ratio (effective teeth in mesh) over spur gears. Crowning is a modification to the gear tooth profile which optimizes gear mesh alignment. It also enhances distribution of loading on the tooth flank, thereby reducing high stress regions which can result in surface pitting.

Spur vs. Helical Gearing

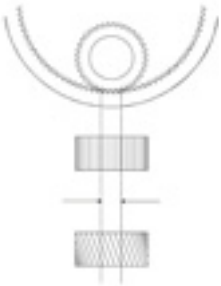

Typical contact ratio is 1.5 for spur gearing.

Contact ratio for equivalent helical gear is 3.3... **more than double the contact ratio.**

The Contact ratio is defined as the number of teeth in mesh at any given time. The higher the contact ratio, the higher the torque rating of the gearing. **Helical gearing has more than 2X the contact ratio of spur gearing.**

Crowned vs. Non-crowned

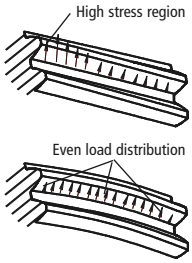

Crowning optimizes the gear mesh alignment within a gear train to increase the torque capacity and reduce noise. It also enhances load distribution on the tooth flank to reduce high stress regions.

Product Feature	NemaTRUE*	NemaTRUE 90*	DuraTRUE*	DuraTRUE 90*	UltraTRUE*	UltraTRUE 90*	EverTRUE*
Helical crowned True Planetary gearing					●	●	

UltraTRUE in-line planetary gearhead*

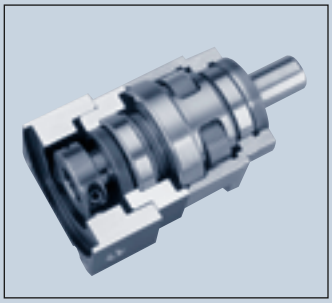

Planetary gearheads are often selected for high precision motion control applications which require a high torque to volume ratio, high torsonial stiffness and low backlash. Until now, these attributes have been sufficient to meet the requirements of the market. Danaher Motion has designed a high torque, whisper quiet helical gearhead to meet the recent improvements in servo motor technology.

Danaher Motion engineers accomplished this by combining the positive attributes of gear crowning and helical gearing with the planetary construction to create the smoothest operating gearhead on the market.

Sold & Serviced By:
ELECTROMATE
Toll Free Phone (877) SERVO98
Toll Free Fax (877) SERV099
www.electromate.com
sales@electromate.com

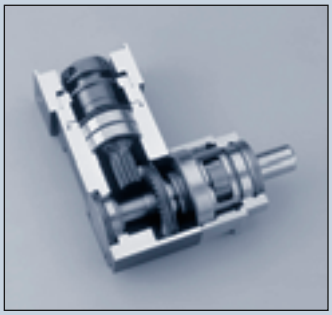

UltraTRUE 90 right angle planetary gearhead*

©2003 Danaher Motion. Printed in the U.S.A. The specifications in this publication are believed to be accurate and reliable. However, it is the responsibility of the product user to determine the suitability of Micron products for a specific application. While defective products will be replaced without charge if promptly returned, no liability is assumed beyond such replacement.

* Trademark of Danaher Motion. DANAHER MOTION is registered in the U.S. Patent and Trademark Office and in other countries.

PowerTRUE* Right Angle Gearheads offer.....

PowerTRUE right angle gearset*

- **Lower backlash accomplished through single axis mesh adjustment**
- **A compact right angle design utilizing a high-tech face gear**
- **Whisper quiet operation due to high contact ratio**
- **Mesh ratios from 1:1 to 5:1**
- **98% efficiency**

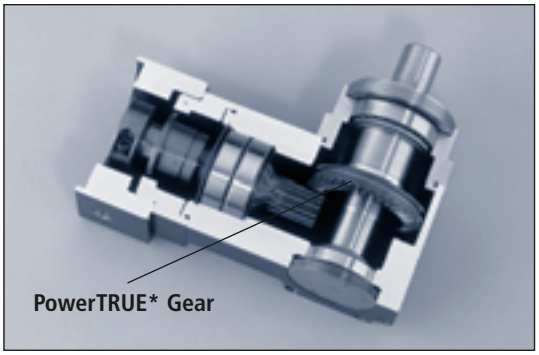

Right angle gear meshes are typically limited to ratios from 1:1 to 3:1 when using standard bevel gears. Compared to these designs, the PowerTRUE 90 gear increases the ratio range to 5:1.

The key to higher torque density is a unique tooth design, created by complex machining made practical with advanced CNC equipment and software. In the design,multiple teeth in the face gear simultaneously mesh with a standard involute pinion. The continuous tooth engagement yields a high contact ratio between the gear and the pinion, boosting torques to new levels and efficiency to 98%.

CNC Machining of a PowerTRUE* right angle gear

Computerized mapping of gear tooth profile

Sold & Serviced by:
ELECTROMATE
Toll Free Phone (877) SERVO98
Toll Free Fax (877) SERV099
www.electromate.com
sales@electromate.com

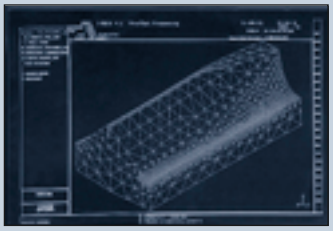

Advanced software enables stress analysis of PowerTRUE tooth profile

Product Feature	NemaTRUE*	NemaTRUE 90*	DuraTRUE*	DuraTRUE 90*	UltraTRUE*	UltraTRUE 90*	EverTRUE*
PowerTRUE gearing		●		●		●	

©2003 Danaher Motion. Printed in the U.S.A. The specifications in this publication are believed to be accurate and reliable. However, it is the responsibility of the product user to determine the suitability of Micron products for a specific application. While defective products will be replaced without charge if promptly returned, no liability is assumed beyond such replacement.

MICRON

* Trademark of Danaher Motion. DANAHER MOTION is registered in the U.S. Patent and Trademark Office and in other countries.

RediMount* Motor Mounting System

Exploded view of RediMount mounting system

Mounting Instructions

1- Slide the provided sleeve into the hub and align the slot in the bushing with the slot in the hub.

2- Set the motor on a work surface or hold fixture with the output shaft facing straight up. If there is a key on the motor, remove it and align the keyway with the slot in the hub. Slide the gearhead down onto the motor shaft.

3- Rotate the hub to align the input housing access holes with the hub clamping bolts.

4 - Using a torque wrench tighten the hub bolts to the pre-torque value indicated in the table.

5 - Bolt the motor to the gearhead with the bolts provided.

6 - Gradually tighten the hub bolts in three steps, increasing the torque each time until reaching the final tightening torque in the table.

Close-up view of the bearing system and hub sleeve which accommodates various motor shaft diameters.

- **Self-aligning hub** - Maintains concentricity between motor shaft and gearhead
- **Pre-installed pinion** - Eliminates pinion setting procedure
- **Modular design** - Allows gearhead and input housing to be stocked separately
- **Flexibility** - Allows easy changeover to alternate motors
- **Interchangeability** - Same RediMount system is used throughout 7 product lines

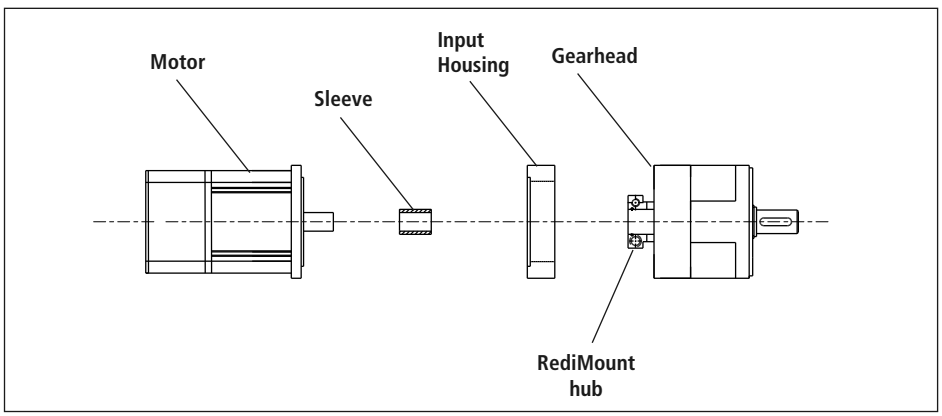

Hub Bolt Tightening Torques

Gearhead Model	Gearhead Frame Size	Pre-Tightening Torque in-lb	Pre-Tightening Torque Nm	Final Tightening Torque in-lb	Final Tightening Torque Nm
NemaTRUE* NemaTRUE 90*	23	2	.2	39	4.4
	34	4	.4	76	8.5
	42	16	1.8	316	36.0
DuraTRUE* DuraTRUE 90*	60	2	.2	39	4.4
	90	4	.4	76	8.5
	115	16	1.8	316	36.0
	142	32	3.6	636	72.0
UltraTRUE* UltraTRUE 90*	60	2	.2	39	4.4
	75/90	4	.4	76	8.5
	10/115	16	1.8	316	36.0
	140	32	3.6	636	72.0
	180	55	6.3	1104	125.0

Sold & Serviced By:
ELECTROMATE
Toll Free Phone (877) SERVO98
Toll Free Fax (877) SERV099
www.electromate.com
sales@electromate.com

Product Feature	NemaTRUE*	NemaTRUE 90*	DuraTRUE*	DuraTRUE 90*	UltraTRUE*	UltraTRUE 90*	EverTRUE*
RediMount system	●	●	●	●	●	●	●

©2003 Danaher Motion. Printed in the U.S.A. The specifications in this publication are believed to be accurate and reliable. However, it is the responsibility of the product user to determine the suitability of Micron products for a specific application. While defective products will be replaced without charge if promptly returned, no liability is assumed beyond such replacement.

* Trademark of Danaher Motion. DANAHER MOTION is registered in the U.S. Patent and Trademark Office and in other countries.

Step 1: Select the required precision class and gearhead configuration (in-line or right angle).

Step 2: Select the proper gearhead using exact or general method.

For continuous duty applications, please contact Applications Engineering.

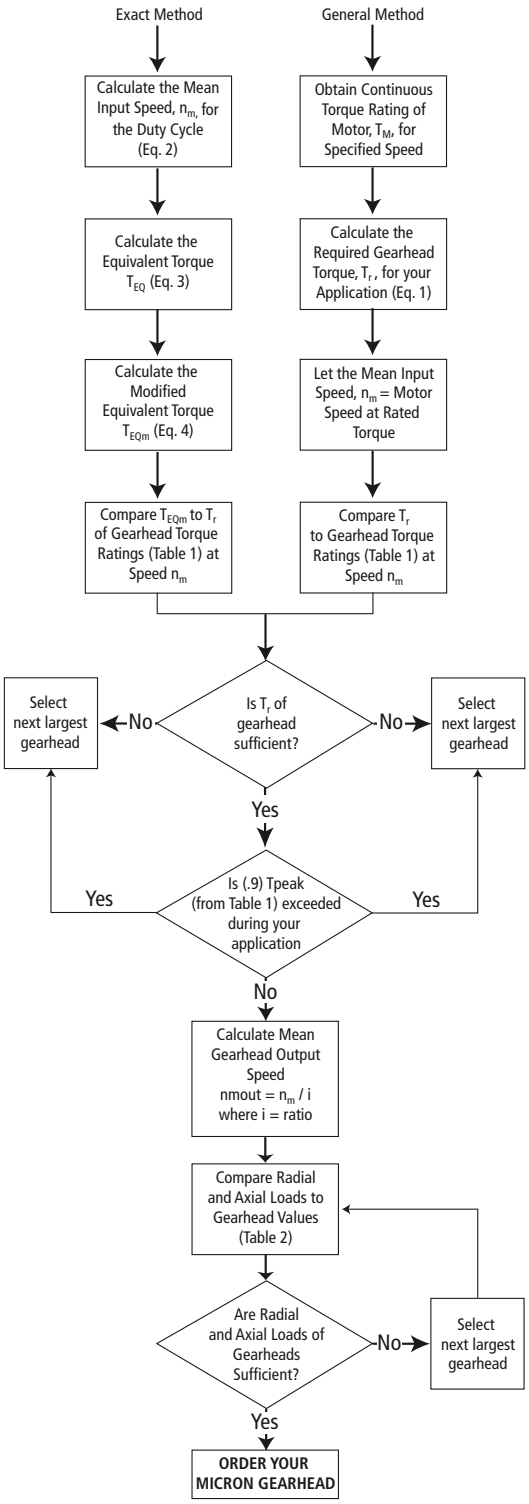

General Method:

Required Gearhead Torque (T_r)

(1) $T_r = T_{M^*} \times i \times e$

where: T_{M^*} = continuous torque of motor
i = gearhead ratio
e = efficiency of gearhead

* Since many motors are capable of exceeding their continuous torque rating for extended lengths of time, the value for T_M will only provide a starting point for gearhead selection. Only use the general method if the continuous motor rating is not exceeded in the application.

Exact Method

Motion Profile

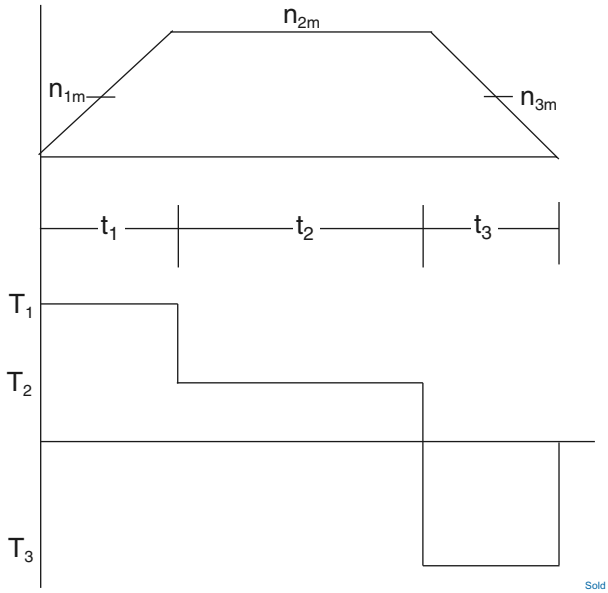

t_n = time period n
n_{nm} = mean speed during time period t_n
T_n = torque during time period t_n

Sold & Serviced By:
ELECTROMATE
Toll Free Phone (877) SERVO98
Toll Free Fax (877) SERVO99
www.electromate.com
sales@electromate.com

Mean input speed (n_m)

(2) $$n_m = \frac{n_{1m}t_1 + n_{2m}t_2 + n_{3m}t_3 + \ldots\ldots + n_{nm}t_n}{t_t}$$

where $t_t = t_1 + t_2 + t_3 + \ldots\ldots\ldots + t_n$

Equivalent torque (T_{EQ})

(3) $$T_{EQ} = \sqrt[8.7]{T_1^{8.7}\frac{n_{1m}t_1}{n_m t_t} + T_2^{8.7}\frac{n_{2m}t_2}{n_m t_t} + T_3^{8.7}\frac{n_{3m}t_{3+\ldots}}{n_m t_t} + T_n^{8.7}\frac{n_{nm}t_n}{n_m t_t}}$$

Modified equivalent torque (T_{EQm})

(4) $$T_{EQm} = \frac{T_{EQ}}{Q}$$

where Q is:

Q	# of cycles/hr
1	>0
.9	>1000
.7	>2500
.5	>5000

©2003 Danaher Motion. Printed in the U.S.A. The specifications in this publication are believed to be accurate and reliable. However, it is the responsibility of the product user to determine the suitability of Micron products for a specific application. While defective products will be replaced without charge if promptly returned, no liability is assumed beyond such replacement.

MICRON

* Trademark of Danaher Motion. DANAHER MOTION is registered in the U.S. Patent and Trademark Office and in other countries.