Sumitomo Drive Technologies

Sumitomo Machinery Corporation of America
Headquarters & Manufacturing
4200 Holland Boulevard, Chesapeake, VA 23323

MATERIAL HANDLING INDUSTRY OF AMERICA® Member Company

Canadian Standards Association

PTDA Member

Sold & Serviced By:

ELECTROMATE

Toll Free Phone (877) SERVO98
www.electromate.com
sales@electromate.com

Sumitomo Drive Technologies

CYCLO® BBB4 BEVEL BUDDYBOX®

Gearmotors

Sumitomo Drive Technologies

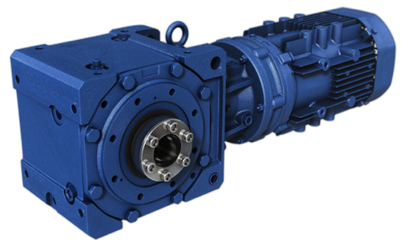

CYCLO® BBB4 BEVEL BUDDYBOX®

Gearmotors

Sumitomo Machinery Corporation of America

CATALOG 13.402.50.002

Cyclo® BBB4 Bevel Buddybox®

Sumitomo Drive Technologies

EP.NA Motors (1 HP+)

Enhanced Performance (EP.NA) integral motors represent exceptional value to customers. To maximize the performance of the motors, a host of advanced features has been developed providing tangible benefits to the users.

All in one

To simplify transactions throughout the continent, North American version (.NA) features standard multiple listings including DOE, UL and CSA, along with CE marking. Other versions are available for premium performance with European 50 Hz voltages.

Exceptionally long life

Our Premium Efficient Motors feature lower temperature rise and robust class "F" insulation. The combination of those attributes yield reduced motor operating temperatures that exponentially increase the thermal life of the insulation.

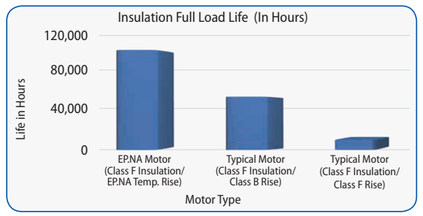

Eco friendly

Premium efficiency, mandated by the DOE, shrinks the carbon footprint by delivering more torque at the same level of energy consumption. Higher starting torques may allow smaller motors to be selected for some applications.

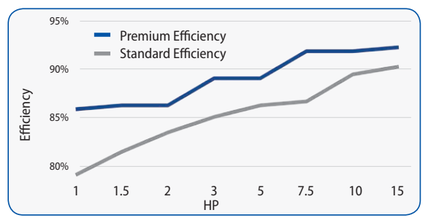

Cost-effective

The premium efficiency design is cost-effective in reducing energy consumption throughout the full speed range, resulting in a lower total lifecycle cost.

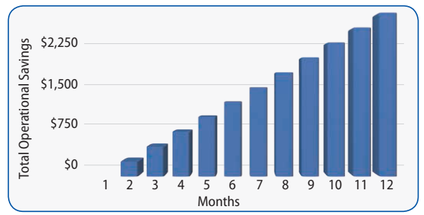

The assumptions for the study are as follows:
9.8 cents of a dollar per kWh • 8600 operating hours annually • A 7.5 kilowatt motor (10 HP) • IE3 motor costing 25% more than the IE1 motor • IE3 premium efficiency motor being 2.8% more efficient than the IE1 standard efficiency motor

Inverter duty

All of the motors feature corona resistant magnet wire that resists the voltage spikes that are inherent to the widely applied IGBT inverters and extends insulation life. Inverter duty brake motors are also available. The non-brake motors are suitable for a 10:1 turndown. The advanced fan design helps to keep the motor running cool at lower input speeds.

Optimized Geometry

Increasing motor size is one of several techniques to reduce losses and achieve premium efficiency. Sumitomo optimized its existing external envelope while still accommodating a large motor core. The result is a compact premium efficient motor.

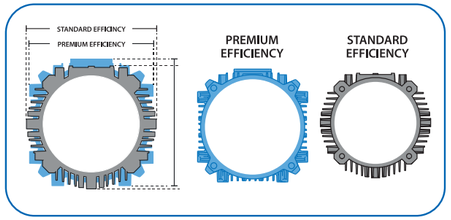

Get Pricing and CAD models for Sumitomo Drive Technologies products today at *www.sumitomodrive.com/Configurator*

E-mail: Customer_Service@suminet.com

Configurator

Product Configurator: *www.sumitomodrive.com/Configurator*

Sumitomo Drive Technologies' online product Configurator streamlines the selection process, enabling you to build **our power transmission products for your specific application.**

Configure your Sumitomo Drive Technologies products today at *www.sumitomodrive.com/Configurator*

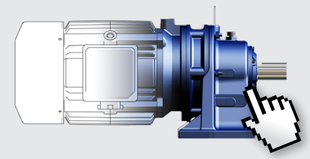

Scan with a QR code reader to login!

Sold & Serviced By:
ELECTROMATE
Toll Free Phone (877) SERV098
www.electromate.com
sales@electromate.com

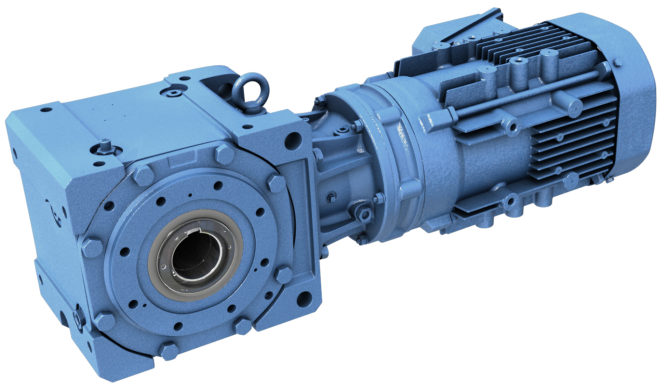

Table of Contents

1. General Information

2. Gearmotors

How to Select 2.2
Configure a Model Number (Nomenclature) 2.4
AGMA Load Classifications 2.6
Selection Tables 2.9
1/8 HP - 60 HP 2.9
Dimensions 2.132
Single Reduction 2.136
Single Reduction Y2 Mounting 2.144
Double Reduction 2.146
Double Reduction Y2 Mounting 2.162

3. Options

Keyed Hollow Shaft 3.2
Solid Output Shaft 3.3
Output Flange/Foot Mounted 3.4
Shrink Disc 3.5
Torque Arm Turnbuckle Type 3.8
Torque Arm T-Type (Optional) 3.9
Screw Conveyor Drive 3.10
Shaft Diameter Availabilty 3.11
Industry Packages 3.14

4. Technical Information

Special Load Guidelines 4.6
Lubrication 4.24
Motor Data 4.26
Thermal Duty 4.39
Standard Wiring 4.40
Brakemotor Characteristics 4.42
Warranty 4.53

Sold & Serviced By:
ELECTROMATE
Toll Free Phone (877) SERVO98
www.electromate.com
sales@electromate.com

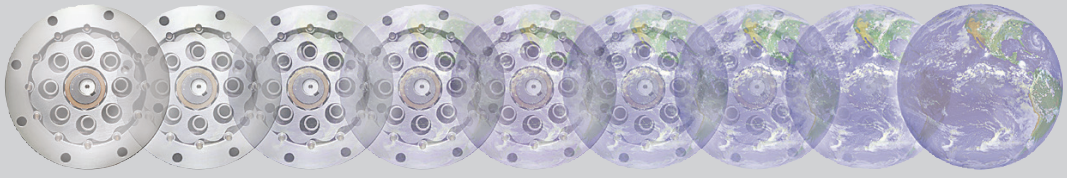

Cyclo® BBB4 Bevel Buddybox

Flexible configurations

- Output Shaft Options:
  - Keyed Hollow
  - Shrink Disc
  - Solid Shaft
  - (Keyless) Taper-Grip® Bushing
- Mounting Options:
  - Flange
  - Foot
  - Shaft

Unique Splined Connection
Ensures more durable and dependable power transmission than typical keyed connections

Cyclo® or Planetary Input
Provides high overload capacity and exceptional reliability

100% Hardened Steel Internal Components
Provide long life, smooth operation and superior strength

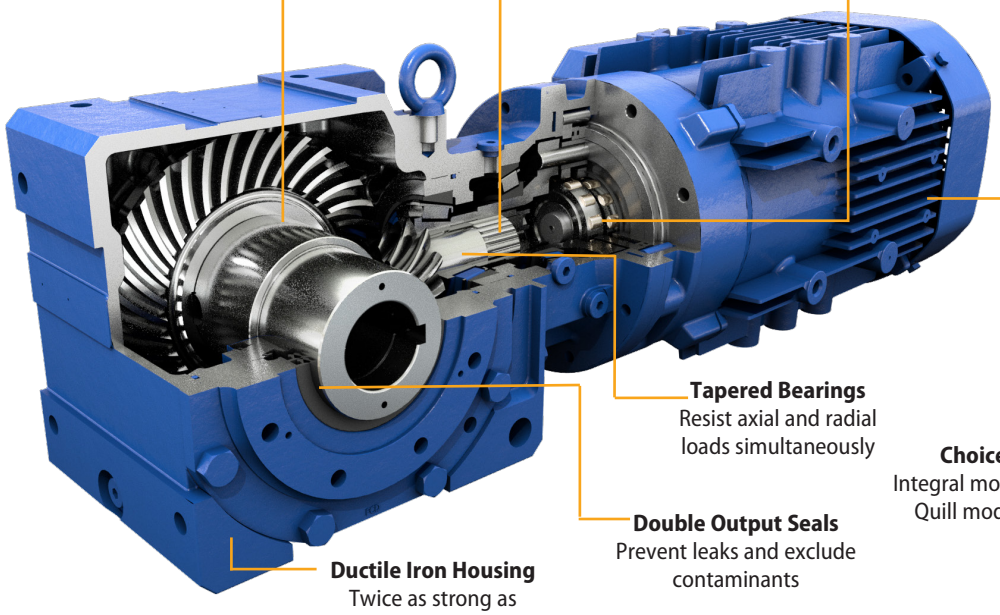

Tapered Bearings
Resist axial and radial loads simultaneously

Choice of Input
Integral motor, C-Face and Quill models available

Double Output Seals
Prevent leaks and exclude contaminants

Ductile Iron Housing
Twice as strong as cast iron, with many mounting surfaces

More Compact, Space-Saving Design Than Typical Right-Angle Gearboxes

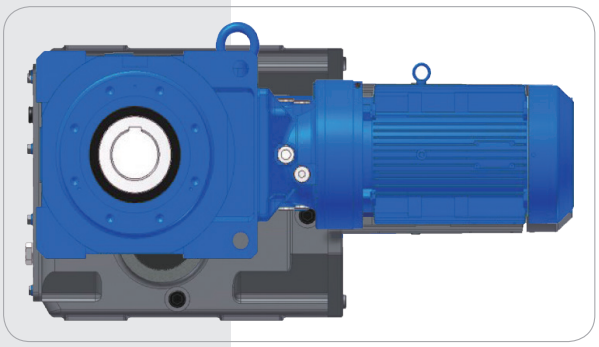

Simple, Single Reservoir Oil Lubrication for Easy Maintenance and Higher Performance

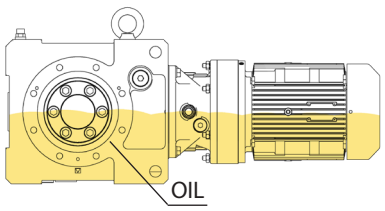

Product Description

The Cyclo® Bevel Buddy Box 4 (Cyclo® BBB4) built by Sumitomo is a robust, state of the art mid-sized all steel family of speed reducers and gearmotors. Building on more than 75 years of successful Cyclo® experience in virtually every application and industry, the result is an extremely compact, efficient and reliable unit in a very power-dense package. The Cyclo® BBB4 is a unique combination of features that results in a highly reliable, efficient and durable gearbox. The all-steel internal construction, in conjunction with the Cyclo® or planetary gear inputs, and ductile iron housing provide unmatched ruggedness.

In addition, the full array of output mounting styles provides an amazing ability to customize the product to fit nearly any requirement. These options include solid shaft, hollow bore, and shrink disc.

Features & Benefits

- **100% Hardened Steel Rotating Components**
  ~ Provide high efficiency, long life and exceptional reliability
- **Cycloidal or Planetary Input**
  ~Unmatched capability to handle overloads
- **Double Output Seals**
  ~Eight lip seals on every unit virtually eliminates the possibility of leaks
- **Dimensionally Interchangeable with BBB3**
  ~ Simple, economical retrofits
- **Patented Taper-Grip® Bushing**
  ~ Simple, keyless shaft mounting
- **Two year warranty**
  ~ Not limited by hours of operation or duty cycles

General Specifications Summary

Ratios:	11:1 to 26,000:1 and greater
Torque Capacity:	159,983 in. lbs. *(17,400N•m)*
HP:	1/8 to 60 Hp *(0.10 to 45 kW)*
Mounting:	Hollow Shaft, Foot, Flange, Face
Input Options:	Integral Motor, C-Face, Quill, and Shovel Base
Motor Standards:	NEMA, IEC, JIS, UL, CSA, CE

Popular Output Options

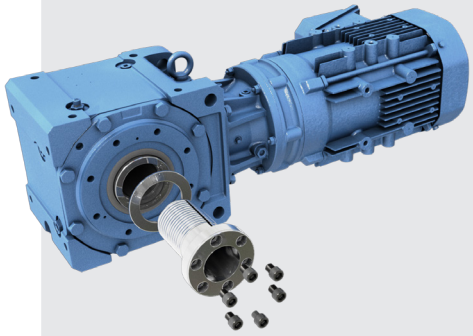

Taper-Grip® Bushing
Inch and Metric Sizes

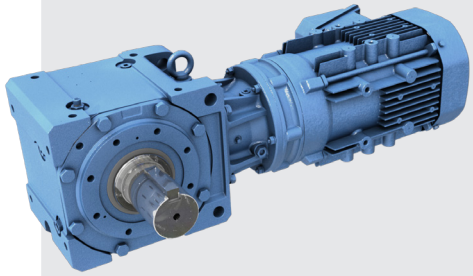

Solid Output Shaft
Inch and Metric Sizes

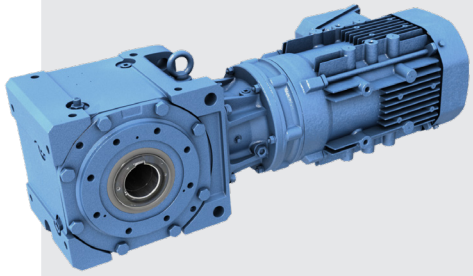

Keyed Hollow Bore
Inch and Metric Sizes

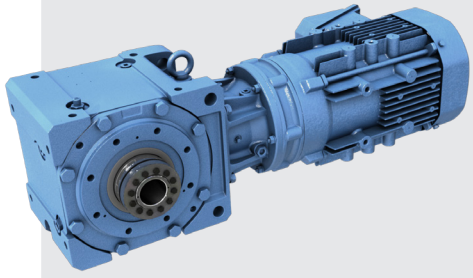

Shrink Disc
Inch and Metric Sizes

For additional BBB4 information, please visit www.sumitomodrive.com

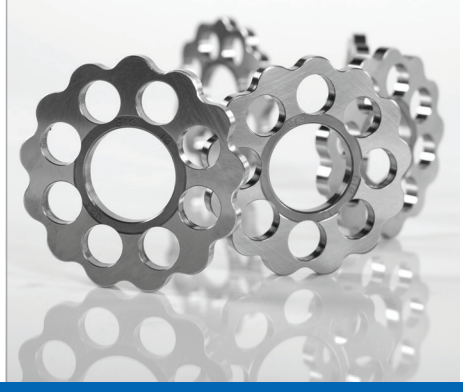

Cyclo® Quality and Reliability, Right Angle Design

- High performance steel input components deliver **up to 94% efficiency**
- Cycloidal technology offers **reliable operation, long life and high shock load capacity**

Product Range (Standard Motor and Reducer Combinations)

Single Reduction Ratios 11 - 417

Combinations with 1450 and 1750 RPM motor

Input Type	Planetary					Cyclo																				
Nominal Ratio	11	13	14	16	18	21	22	25	28	35	39	46	53	60	67	74	80	88	102	112	123	151	179	207	249	305	417
Actual Ratio	*	*	*	*	*	21	22.4	24.5	28	35.2	38.5	45.5	52.5	59.5	67.2	73.5	80	87.5	101.5	112	122.5	150.5	178.5	206.5	248.5	304.5	416.5
Actual Output RPM 1450 50 Hz	138	113	104	90.6	82.9	69.0	64.7	59.2	51.8	41.2	37.7	31.9	27.6	24.4	21.6	19.7	18.1	16.6	14.3	12.9	11.8	9.63	8.12	7.02	5.84	4.76	3.48
Actual Output RPM 1750 60 Hz	167	137	125	109	100	83.3	78.1	71.4	62.5	49.7	45.5	38.5	33.3	29.4	26.0	23.8	21.9	20.0	17.2	15.6	14.3	11.6	9.80	8.47	7.04	5.75	4.20
Motor Power HP (kW) 1/8 (0.1)																											●
1/4 (0.2)																							●	●	●	●	●
1/3 (0.25)																							●	●	●	●	●
1/2 (0.4)																				●	●	●	●	●	●	●	
3/4 (0.55)																	●	●	●	●	●	●	●	●	●	●	
1 (0.75)														●	●	●	●	●	●	●	●	●	●	●	●	●	
1.5 (1.1)	●	●	●	●	●	●	●	●	●	●	●	●	●	●	●	●	●	●	●	●	●	●	●	●	●	●	
2 (1.5)	●	●	●	●	●	●	●	●	●	●	●	●	●	●	●	●	●	●	●	●	●	●	●	●	●	●	
3 (2.2)	●	●	●	●	●	●	●	●	●	●	●	●	●	●	●	●	●	●	●	●	●	●	●	●	●	●	
5 (3.7)	●	●	●	●	●	●	●	●	●	●	●	●	●	●	●	●	●	●	●	●	●	●	●	●	●	●	
7.5 (5.5)	●	●	●	●	●	●	●	●	●	●	●	●	●	●	●	●	●	●	●	●	●	●	●	●	●	●	
10 (7.5)	●	●	●	●	●	●	●	●	●	●	●	●	●	●	●	●	●	●	●	●	●	●	●	●	●	●	
15 (11)	●	●	●	●	●	●	●	●	●	●	●	●	●	●	●	●	●	●	●	●	●	●	●	●	●		
20 (15)	●	●	●	●	●	●	●	●	●	●	●	●	●	●	●	●	●	●	●	●	●	●	●				
25 (18.5)	●	●	●	●	●	●	●	●	●	●	●	●	●	●	●	●	●	●	●	●	●	●					
30 (22)	●	●	●	●	●	●	●	●	●	●	●	●	●	●	●	●	●	●	●	●	●						
40 (30)	●	●	●	●	●	●	●	●	●	●	●	●	●	●	●	●	●	●									
50 (37)	●	●	●	●	●	●	●	●	●	●	●	●	●	●	●	●	●										
60 (45)	●	●	●	●	●	●	●	●	●	●	●	●	●	●													

* Refer to the table shown at the bottom of this page

Double Reduction Ratios 364 - 10658

Combinations with 1450 and 1750 RPM motor

Input Type	Cyclo																				
Nominal Ratio	364	424	501	578	683	809	956	1117	1320	1656	1957	2272	2559	2944	3511	4365	5177	6472	7228	8880	10658
Actual Ratio	364	423.5	500.5	577.5	682.5	808.5	955.5	1116.5	1319.5	1655.5	1956.5	2271.5	2558.5	2943.5	3510.5	4364.5	5176.5	6471.5	7227.5	8879.5	10657.5
Actual Output RPM 1450 50 Hz	3.98	3.42	2.90	2.51	2.12	1.79	1.52	1.30	1.10	0.876	0.741	0.638	0.567	0.493	0.413	0.332	0.280	0.224	0.201	0.163	0.136
Actual Output RPM 1750 60 Hz	4.81	4.13	3.50	3.03	2.56	2.16	1.83	1.57	1.33	1.06	0.894	0.770	0.684	0.595	0.499	0.401	0.338	0.270	0.242	0.197	0.164
Motor Power HP (kW) 1/8 (0.1)			●	●	●	●	●	●	●	●	●	●	●	●	●	●	●	●	●	●	●
1/4 (0.2)	●	●	●	●	●	●	●	●	●	●	●	●	●	●	●	●	●	●	●	●	●
1/3 (0.25)	●	●	●	●	●	●	●	●	●	●	●	●	●	●	●	●	●	●	●	●	●
1/2 (0.4)	●	●	●	●	●	●	●	●	●	●	●	●	●	●	●	●	●	●	●		
3/4 (0.55)	●	●	●	●	●	●	●	●	●	●	●	●	●	●	●	●	●				
1 (0.75)	●	●	●	●	●	●	●	●	●	●	●	●	●	●	●						
1.5 (1.1)	●	●	●	●	●	●	●	●	●	●	●	●	●								
2 (1.5)	●	●	●	●	●	●	●	●	●	●	●										
3 (2.2)	●	●	●	●	●	●	●	●	●												
5 (3.7)	●	●	●	●	●	●															
7.5 (5.5)	●	●	●																		
10.5 (7.5)	●																				

● Standard efficiency motor
● Premium efficiency or IE3 motor

* Planetary Actual Ratio

Nominal Ratio	BBB Frame Size												
	4A10	4A12	4A14	4B14	4B16	4C16	4D16	4D17	4E17	4E18	4F18	4E19	4F19
11	10.50		10.89		10.85					10.50		10.82	
13	12.99	12.80	12.95		12.80			13.09				13.01	
14	14.21	14.00	14.16		14.00			14.32				14.23	
16	15.36	15.65	16.00		16.26			16.17		15.63		15.47	
18	16.80	17.12	17.50		17.78			17.68		17.10		16.92	

FAQs

How do I select a Cyclo® BBB4 speed reducer or gearmotor?
Selection is based on the actual horsepower and/or torque requirements at the output shaft. The Cyclo® BBB4 speed reducer has particularly high efficiencies over a wide range of reduction ratios, which frequently permits the use of reduced input power requirements (smaller HP or *kW* motor) without sacrificing output shaft torque. The selection procedures in this catalog will guide you in choosing the most efficient reducer for your application.

What information do I need to get started in the selection process?
To select the proper reducer for your application, you will need to know:

- Application: type of driven machine
- Hours of operation per day
- Motor power (HP or *kW*) and speed (RPM)
- Mounting position
- Environmental conditions
- Ambient temperature range

If there are any special environmental factors or operation requirements, they must also be noted. This information will be important in determining the Service Factor of your application.

What is the difference between BBB4 and BBB5?
The BBB4 is more rugged by virtue of its stronger ductile iron housing, which has multiple mounting surfaces and is offered in numerous variants, including foot mount and solid shaft. The BBB5 is optimized for a minimal space envelope and shaft mounted applications.

What are Service Factors and how are they used?
In general, reducers and gearmotors are rated for the specific conditions and operating requirements of the application by the use of AGMA-defined Service Factors. There are three AGMA load classifications for gearmotors: I, II and III (pages 2.6–2.7). The Service Factors are used in the product selection process to adjust for the specific conditions and operating requirements of your application.

What do I do if my application has particularly severe operating conditions?
The standard ratings for Cyclo® BBB4 are based on 10-hour daily service under conditions of uniform loads (equivalent to AGMA service factor 1.0). By following the product selection process, you will determine and apply the Service Factors to compensate for the severe operating conditions.

How can I be sure that the reducer can withstand periodic excessive overloads?
Cyclo® BBB4 Speed Reducers can provide solutions with extraordinary shock load capabilities. For applications with high shock loads, consult a Sumitomo Applications Engineer.

What are the standard input speeds?
In general terms, the speeds are 1750 and 1450 RPM. The selection tables in this catalog are based on 1750 and 1450 RPM. When non-standard input speeds are used, the horsepower and torque ratings also vary.

What are the advantages of the Taper-Grip® bushing?
The Taper-Grip® bushing is integral to the Cyclo® BBB4 and provides for easy mounting and removal to and from the shaft of the driven machine. Because it requires no keyway, the shaft isn't weakened and maximum torque is transmitted. Allows easy changing of bore diameters and reduces spare reducer requirements.

What are the advantages of a shrink disc?
The shrink disc provides for easy mounting and removal to and from the shaft of the driven machine. Because it requires no keyway, the shaft isn't weakened and maximum torque is transmitted.

What kind of torque arm do I specify? At what position should I mount it?
The standard torque arm assembly available is a Turnbuckle type as shown on page 3.8. It should operate in tension. The torque arm should be mounted at 90 degrees to a line from the point of attachment to the reducer and the center of the output bore with up to 30 degrees plus or minus variance. A bracket type torque arm is also offered as a non-stock option.

Enhanced Performance (EP) Motors FAQs

What efficiency level are these Enhanced Performance (EP) motors?
The EP motor (applies to 1HP and above) is a Premium efficiency class, or International Efficiency 3 (IE3) design. Our integral fractional (less than 1HP) motors are not EP and are classified as standard efficiency IE1 motors.

What standards do these motors meet?
All Sumitomo motors are compliant with the Energy Policy and Conservation Act (EPAct), as recently amended by the Department of Energy with a new ruling.

EP Sumitomo motors met the efficiency levels promoted by the Consortium for Energy Efficiency (CEE) and meet the Canadian efficiency levels specified by NRCan.

The IE3 efficiency ratings conform to both the IEC Standard 60034-30:2009 and eco-design directive 2005/32/EC.

Will Sumitomo motors work with inverters?
All current EP motors feature corona resistant magnet wire that extends the life of the insulation and enables the motors to resist the voltage spikes common with IGBT variable frequency drives.

What agency listings apply?
All EP motors in this product line are UL recognized, CSA certified and CE marked.

Can the motor be nameplated to operate at 50 hertz?
The motor can be nameplated and will operate at 50 hertz, but depending on the export destination, it may not meet that country's energy efficiency requirements. For areas requiring IE3 performance at 50 hertz, like Asia and Europe, other 50 hertz specific versions can be provided. Conformance with energy efficiency requirements in destination country is the responsibility of the customer.

Is the selection procedure the same as previous gearmotors?
Similar, the difference is restricted to applications with a large number of across the line starts and stops. Because the EP motors have more inertia and higher inrush current than previous integral motors, a supplemental service factor is applied to these applications using EP motors. The selection procedure for fractional HP units is unchanged.

Are the brakes the same?
The brakes are the same direct acting, fast response types used previously. For motors 1 HP and above they are a new larger model that has been redesigned to match the new motor profiles. Because the EP motor inertia is significantly higher, it may be necessary to adjust external trigger points or limit switches. Since the brake assembly shapes are different, old and new kits are not interchangeable.

What is the standard insulation system?
The motors continue with the Class F system, which limits the temperature rise to a Class B rise, where it bounds the allowable temperature rise to 80°C. It utilizes an insulation system capable of handling a 105°C rise to significantly extend insulation life**.**

Are EP motors interchangeable with old AF-motors?
The new EP motors without brake have the same 10:1 constant torque speed range as the AF-motor. Motors are dimensionally and performance-wise different so VFD re-programming may be required. For EP brakemotor with use on VFDs, the applicable speed range may be limited. Please consult the factory for options for EP brakemotors.

Will old motors continue to be available?
For motor powers 1 HP and above, EP motors have replaced the standard efficiency motors. (does not apply to fractional HP). 1HP+ Older motors do not meet the federally mandated efficiency requirements that went into effect on June 1, 2016. Non-compliant motors cannot be manufactured or imported into the United States.

Should I be concerned if I am replacing an older motor with the new EP motor?
For most applications, the use of the new EP motor will result in a more efficient, cooler-running and energy-saving motor. However, for applications with certain performance constraints, you may need to review the impact of the following:

- larger dimension and weight
- larger moment of inertia
- higher starting current and torque.

If taking an old standard efficiency motor off a gearmotor and replacing it with the same HP new EP motor, the EP motor will bolt to the old gearmotor. The motor flange diameters, pilot diameters, bolt patterns and shaft diameters all match. Motor body dimensions and weight will change.

Standard Specifications

		Standard Specifications	Standard Specifications with Built-In Brake
3 Phase Integral Motor	Capacity Range:	1/8 ~ 60HP (0.1 ~ 45 kW), 4P	1/8 ~ 40HP (0.1 ~ 30 kW), 4P, FB Brake 37 ~ 45 kW (50 ~ 60HP), 4P, ESB Brake
	Power Supply:	Motor Power: 230/460V, 60Hz, 3Phase 575V, 60Hz, 3Phase	Brake Power: 1/8 ~ 15HP (0.1 ~ 11kW): 230/460V, 60Hz, 3Ph 575V, 60Hz, 3Ph 20 ~ 40HP (15 ~ 30kW): 200 ~ 240V, 60Hz, 3Ph 380 ~ 480V 60Hz, 3Ph 575V, 60Hz, 3Ph
	Motor Standard:	NEMA	NEMA
	Efficiency:	Premium Efficiency (IE3) (1 HP+)	Premium Efficiency (IE3) (1 HP+)
	Protection:	IP55	IP55 (1 ~ 15HP) IP54 (20 ~ 60HP)
	Certification:	CE Mark, UL Recognized, CSA Approval	CE Mark, UL Recognized, CSA Approval
	Conduit Box:	Diecast Aluminum, NPT Conduit Thread	Diecast Aluminum, NPT Conduit Thread
	Inverter Operation:	10:1 Constant Torque Speed Range Insulation Meets NEMA MG1, Part 31	4:1 Constant Torque Speed Range or better. Insulation Meets NEMA MG1, Part 31
	Enclosure:	Totally Enclosed Fan Cooled Type except 1/8HP is TENV	Totally Enclosed Fan Cooled Type
	Motor Type:	Induction Motor, Squirel Cage Rotor	Induction Motor, Squirel Cage Rotor
	Frame Material:	1/8 ~ 20HP (0.1 ~ 15kW), 4P: diecast Al 25HP ~ 60HP (18.5 ~ 45kW), 4P: cast iron	1/8 ~ 20HP (0.1 ~ 15kW), 4P: diecast Al 25HP ~ 60HP (18.5 ~ 45kW), 4P: cast iron
	Bearings:	Deep Groove, Ball Bearing, CM Clearance	Deep Groove, Ball Bearing, CM Clearance
	Insulation:	Class F with a Class B Rise	Motor: Class F with a Class B Rise Brake: Class F
	Time Rating:	Continuous	Continuous

BBB4 Reducer	Reduction:	Combination of Cyclo or Planetary input and right angle spiral bevel gear output
	Lubrication:	In all mounting configurations except Y4, the Cyclo and Bevel portions are oil lubricated. For the Y4 mounting configuration, the Cyclo portion is grease lubricated and the bevel portion is oil lubricated
	Seals:	Nitrile material, dual lipped, tandem output seals
	Material:	Rugged ductile cast iron housings in all sizes
	Paint Color:	Blue, Munsell color number 6.5PB 3.6/8.2
	Bearings:	Tapered roller bearings on geared output of all sizes. Deep groove ball bearings on Cyclo input
Ambient Conditions	Installation Location:	Indoor (Minimal dust and humidity)
	Ambient Temperature:	14° ~ 104° F (-10° ~ 40° C)
	Ambient Humidity:	Under 85%
	Elevation:	Under 3300 feet (1000 meters)
	Atmosphere:	Well ventilated location, free of corrosive gases, explosive gases, vapors, and dust

Sold & Serviced By:
ELECTROMATE
Toll Free Phone (877) SERVO98
www.electromate.com
sales@electromate.com

Mounting Positions

Note: 1. Mounting positions are shown with standard (Taper Grip Bushing) output option.
2. The plane of reference represents the location of customer's equipment.

Y1

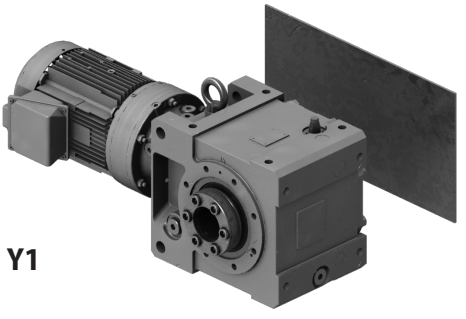

Y2

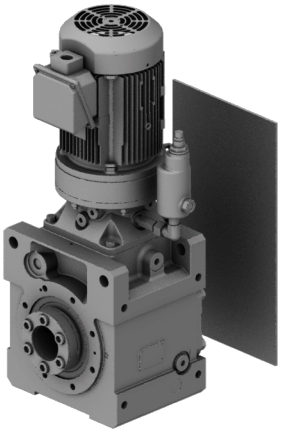

Y3

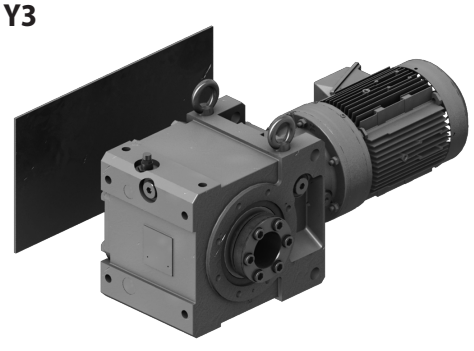

Y4

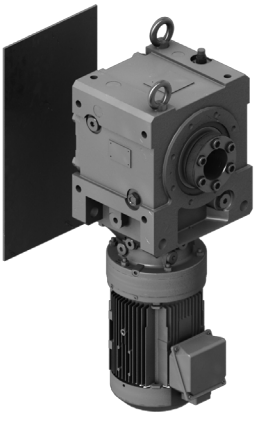

Y5

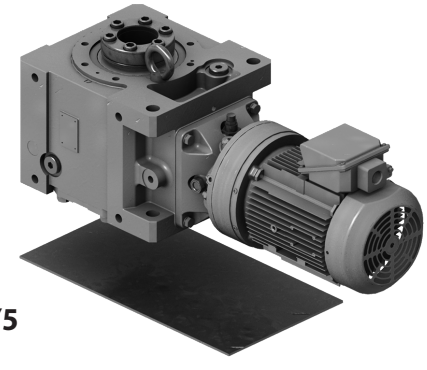

Y6

Additional Mounting Positions

Figure 1.1 Keyed Hollow Output Bore - Output Flange Left[1]

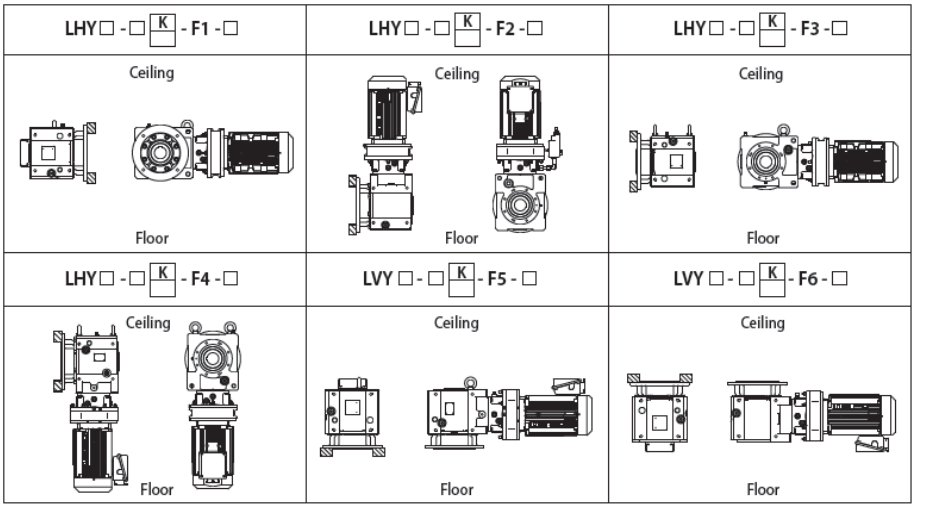

Figure 1.2 Keyed Hollow Output Bore - Output Flange Right[1]

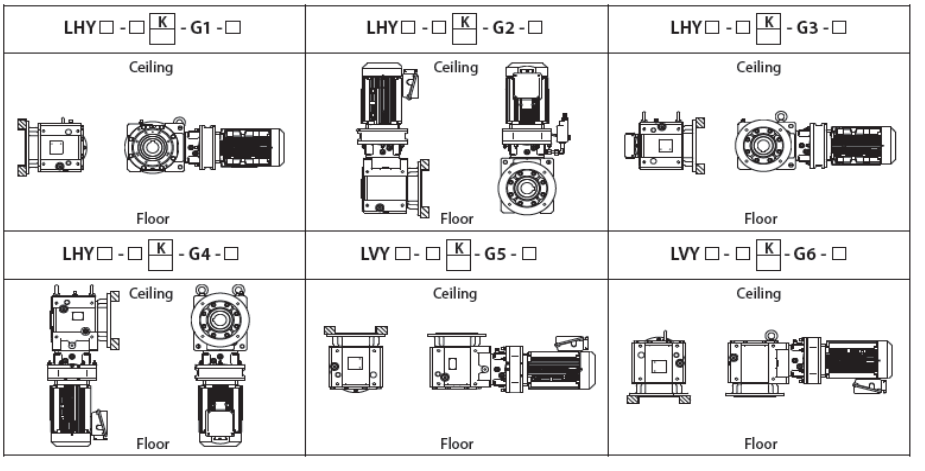

Figure 1.3 Solid Output Shaft (L) - Output Flange Left[1]

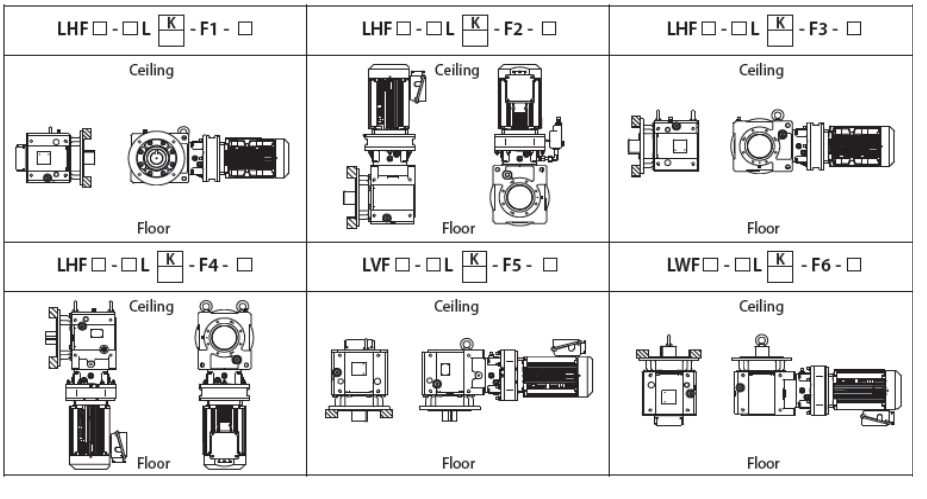

Note: [1] K = inch diameter shaft or keyed hollow bore in Model Number; blank = metric diameter shaft or keye
Refer to page 2.4 for configure Model Number.

Sold & Serviced By:
ELECTROMATE
Toll Free Phone (877) SERV098
www.electromate.com
sales@electromate.com

Additional Mounting Positions continued

Figure 1.4 Solid Output Shaft Right (R) - Output Flange Right

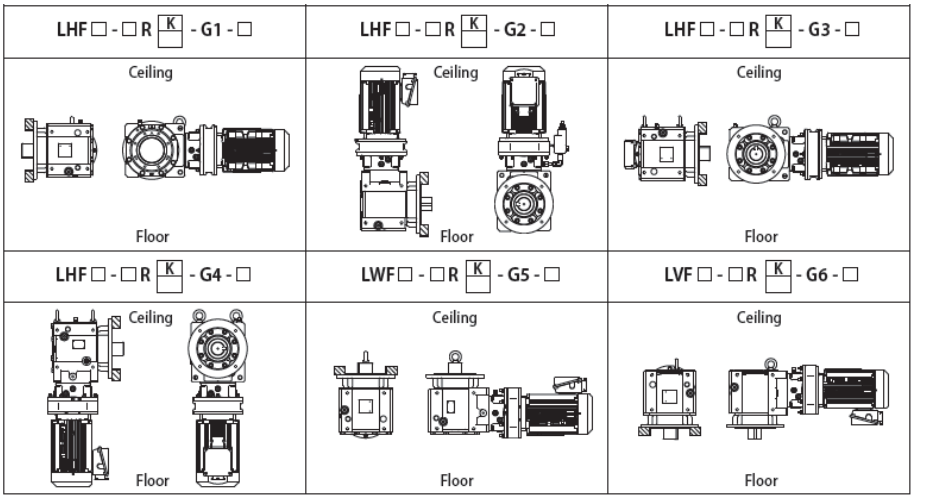

Figure 1.5 Double Extended Solid Output Shaft (T) - Output Flange Left

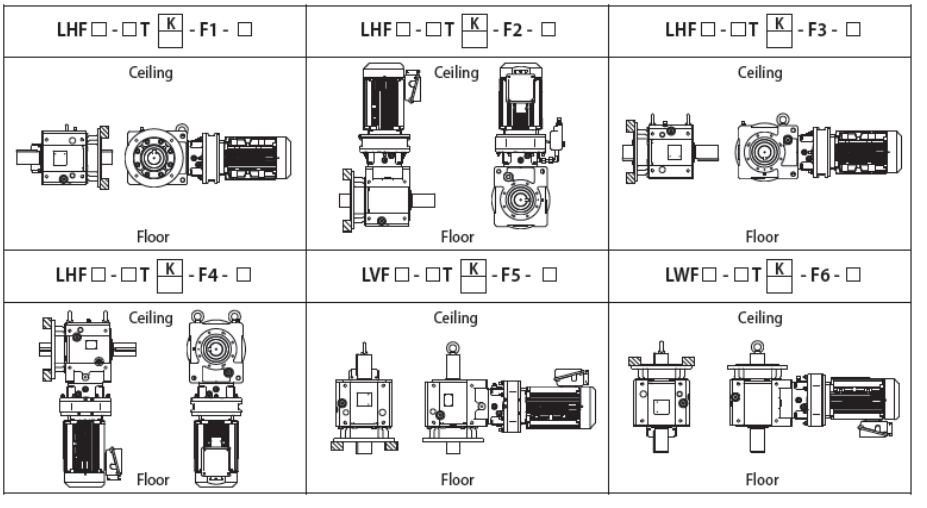

Figure 1.6 Double Extended Solid Output Shaft (T) - Output Flange Right

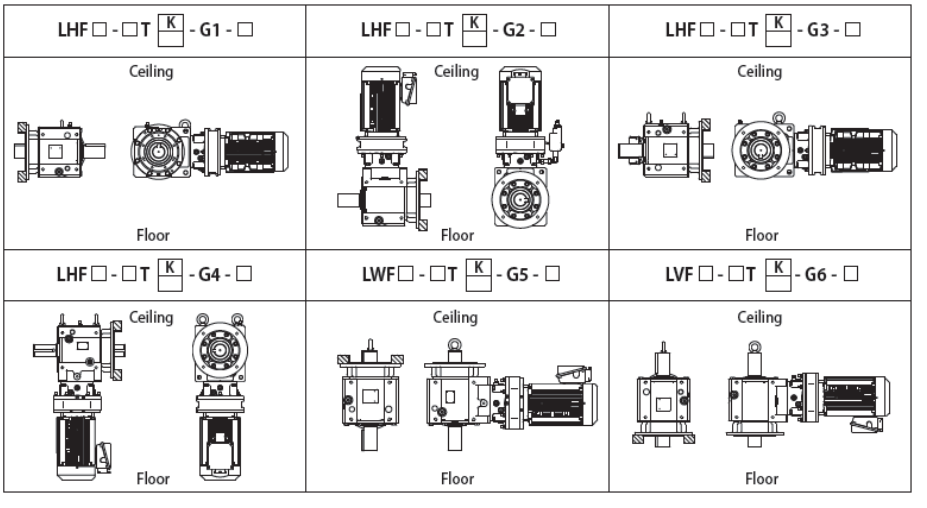

Notes: [1] K = inch diameter shaft or keyed hollow bore; blank = metric diameter shaft or keyed hollow bore.

Sold & Serviced By:
ELECTROMATE
Toll Free Phone (877) SERV098
www.electromate.com
sales@electromate.com

Additional Mounting Positions continued

Figure 1.7 Solid Ouput Shaft Left (L) - Output Flange Right

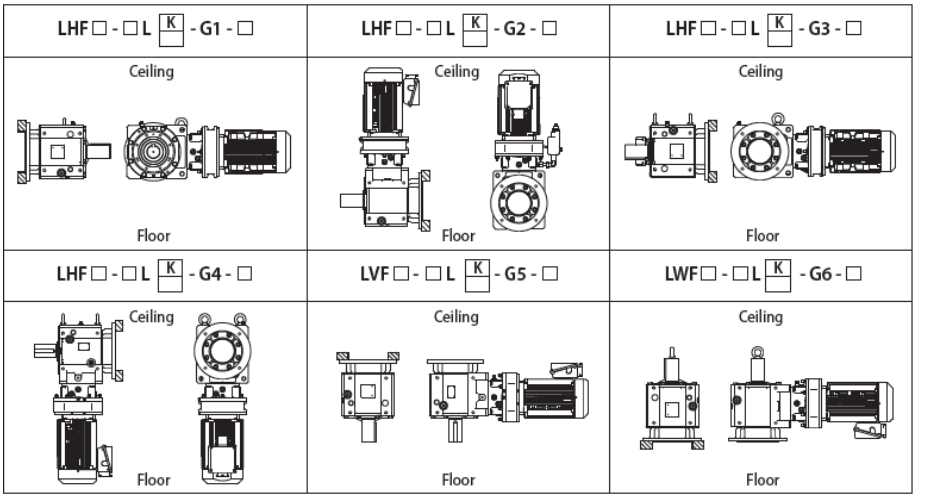

Figure 1.8 Solid Ouput Shaft Right (R) - Output Flange Left

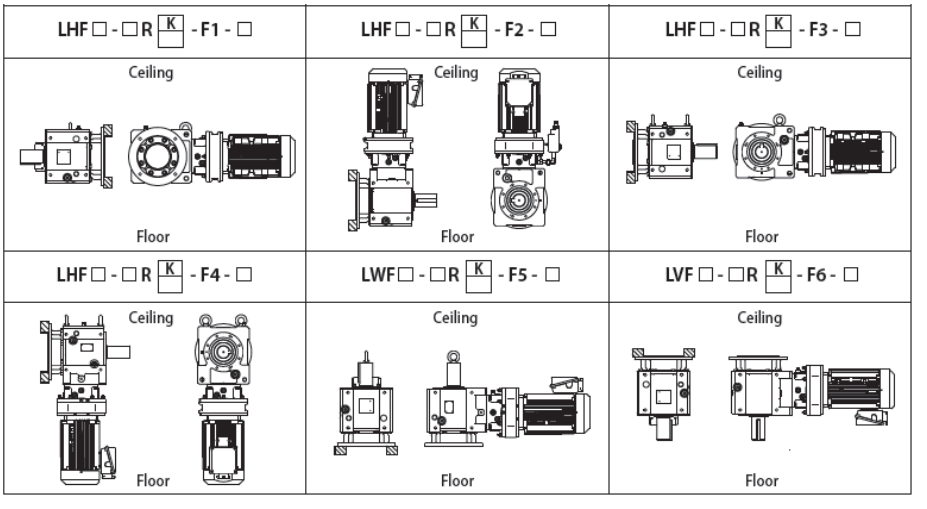

Figure 1.9 Solid Output Shaft Left (L) - Mounting Foot Bottom

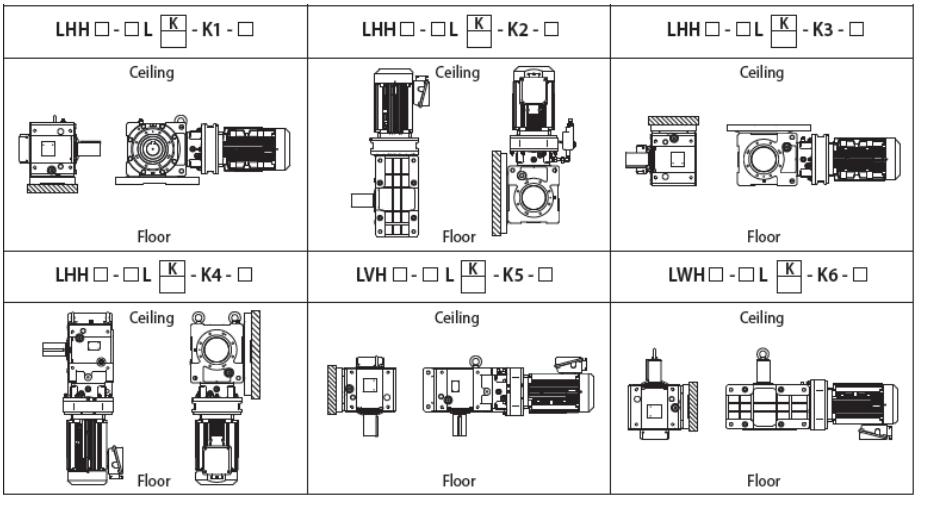

Notes: [1] K = inch diameter shaft or keyed hollow bore; blank = metric diameter shaft or keyed hollow bore.

Sold & Serviced By:
ELECTROMATE
Toll Free Phone (877) SERV098
www.electromate.com
sales@electromate.com

Additional Mounting Positions continued

Figure 1.10 Solid Output Shaft Right (R) - Mounting Foot Bottom

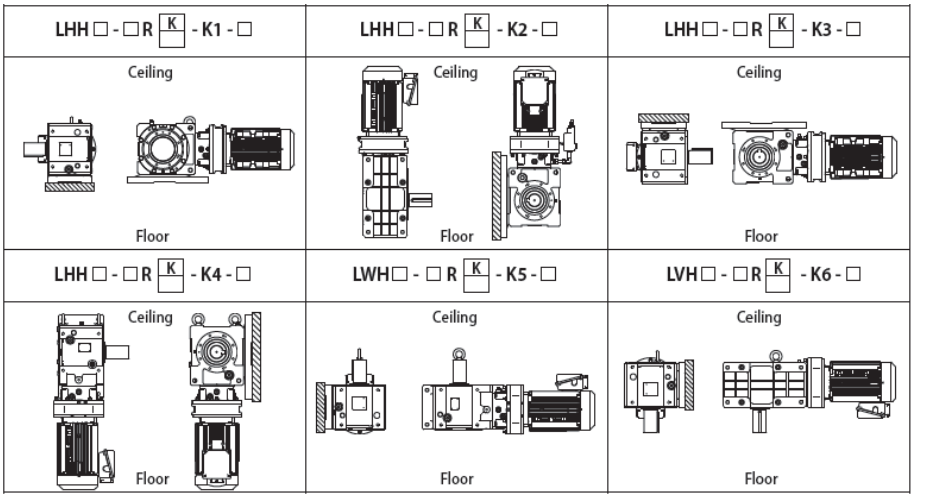

Figure 1.11 Double Extended Solid Output Shaft (T) - Mounting Foot Bottom

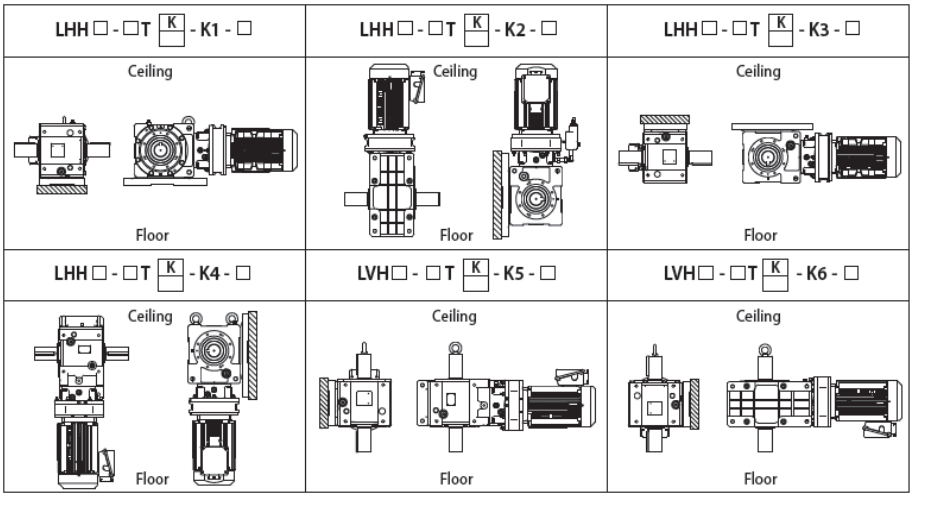

Figure 1.12 Double Extended Solid Output Shaft (T) - Mounting Foot Side

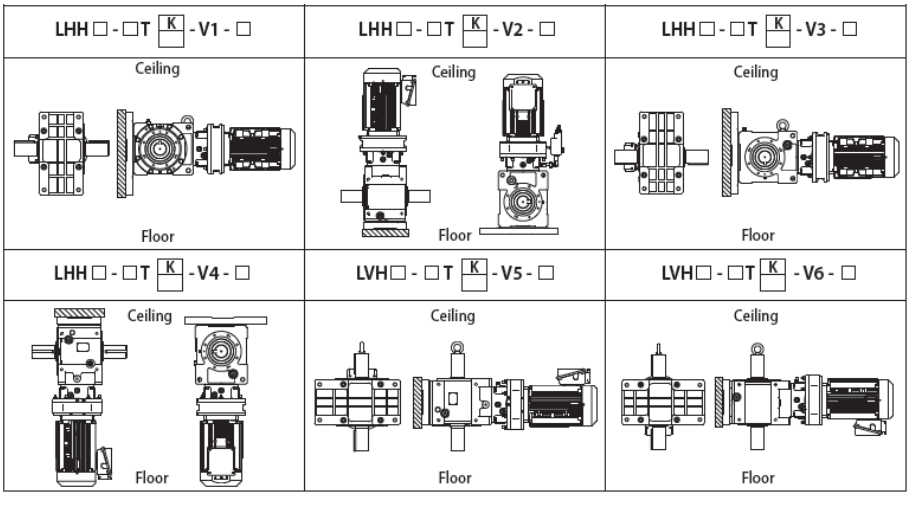

Notes: [1] K = inch diameter shaft or keyed hollow bore; blank = metric diameter shaft or keyed hollow bore.

Sold & Serviced By:
ELECTROMATE
Toll Free Phone (877) SERV098
www.electromate.com
sales@electromate.com

Additional Mounting Positions continued

Figure 1.13 Solid Output Shaft Left (L) - Mounting Foot Side

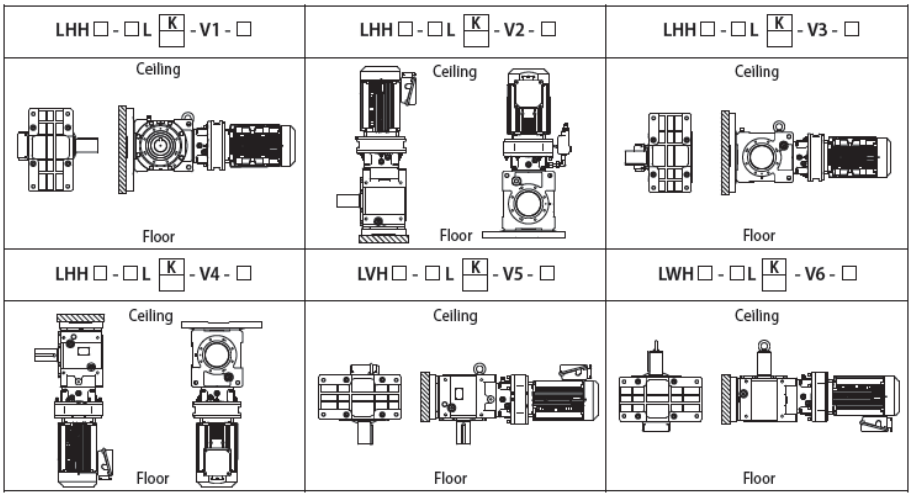

Figure 1.14 Solid Output Shaft Right (R) - Mounting Foot Side

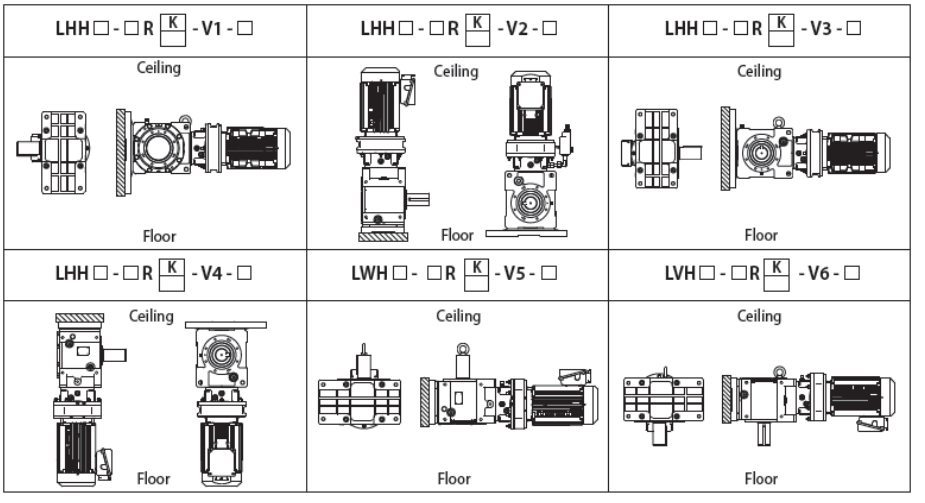

Figure 1.15 Keyed Hollow Bore Output Bore

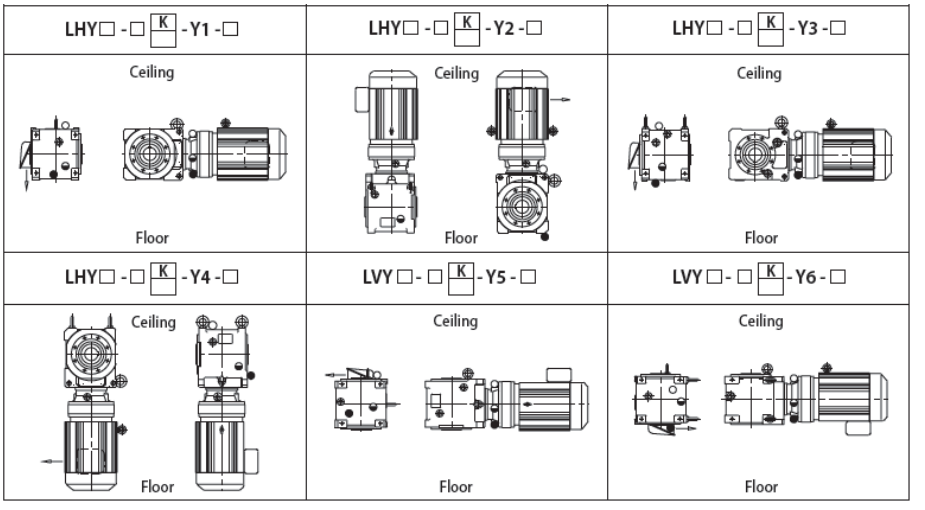

Notes: [1] K = inch diameter shaft or keyed hollow bore; blank = metric diameter shaft or keyed hollow bore.

Sold & Serviced By:
ELECTROMATE
Toll Free Phone (877) SERV098
www.electromate.com
sales@electromate.com

Optional Ratios

Single Reduction												
Nominal Ratio	Overall	19	26	42	48	54	93	138	163	189	227	278
	Input	6	8	13	15	17	29	43	51	59	71	87
Exact Ratio	Overall	19.2	25.6	41.6	48	54.4	92.8	137.6	163.2	188.8	227.2	278.4
	Output	3.2										
	Input	6	8	13	15	17	29	43	51	59	71	87

Double Reduction															
Nominal Ratio	Overall	387	403	420	435	441	458	476	525	528	538	541	557	588	598
	Input	121	126	120	136	126	143	136	150	165	168	169	174	168	187
Exact Ratio	Overall	387.2	403.2	420.0	435.2	441.0	457.6	476.0	525.0	528.0	537.6	540.8	556.8	588.0	598.4
	Output	3.2	3.2	3.5	3.2	3.5	3.2	3.5	3.5	3.2	3.2	3.2	3.2	3.5	3.2
	Input	(11 x 11)	(21 x 6)	(15 x 8)	(17 x 8)	(21 x 6)	(13 x 11)	(17 x 8)	(25 x 6)	(15 x 11)	(21 x 8)	(13 x 13)	(29 x 6)	(21 x 8)	(17 x 11)
Nominal Ratio	Overall	609	624	640	655	672	707	720	739	774	788	812	816	826	874
	Input	174	195	200	187	210	221	225	231	221	225	232	255	258	273
Exact Ratio	Overall	609.0	624.0	640.0	654.5	672.0	707.2	720.0	739.2	773.5	787.5	812.0	816.0	825.6	873.6
	Output	3.5	3.2	3.2	3.5	3.2	3.2	3.2	3.2	3.5	3.5	3.5	3.2	3.2	3.2
	Input	(29 x 6)	(15 x 13)	(25 x 8)	(17 x 11)	(35 x 6)	(17 x 13)	(15 x 15)	(21 x 11)	(17 x 13)	(15 x 15)	(29 x 8)	(17 x 15)	(43 x 6)	(21 x 13)
Nominal Ratio	Overall	893	896	903	925	963	980	1008	1012	1021	1040	1071	1103	1138	1142
	Input	255	280	258	289	275	280	315	289	319	325	306	315	325	357
Exact Ratio	Overall	892.5	896.0	903.0	924.8	962.5	980.0	1008.0	1011.5	1020.8	1040.0	1071.0	1102.5	1137.5	1142.4
	Output	3.5	3.2	3.5	3.2	3.5	3.5	3.2	3.5	3.2	3.2	3.5	3.5	3.5	3.2
	Input	(17 x 15)	(35 x 8)	(43 x 6)	(17 x 17)	(25 x 11)	(35 x 8)	(21 x 15)	(17 x 17)	(29 x 11)	(25 x 13)	(51 x 6)	(21 x 15)	(25 x 13)	(21 x 17)
Nominal Ratio	Overall	1200	1204	1206	1232	1239	1250	1306	1313	1348	1360	1392	1411	1428	1456
	Input	375	344	377	385	354	357	408	375	385	425	435	441	408	455
Exact Ratio	Overall	1200.0	1204.0	1206.4	1232.0	1239.0	1249.5	1305.6	1312.5	1347.5	1360.0	1392.0	1411.2	1428.0	1456.0
	Output	3.2	3.5	3.2	3.2	3.5	3.5	3.2	3.5	3.5	3.2	3.2	3.2	3.5	3.2
	Input	(25 x 15)	(43 x 8)	(29 x 13)	(35 x 11)	(59 x 6)	(21 x 17)	(51 x 8)	(25 x 15)	(35 x 11)	(25 x 17)	(29 x 15)	(21 x 21)	(51 x 8)	(35 x 13)
Nominal Ratio	Overall	1488	1510	1514	1523	1544	1578	1593	1652	1670	1680	1726	1789	1795	1818
	Input	425	472	473	435	441	493	455	472	522	525	493	559	561	568
Exact Ratio	Overall	1487.5	1510.4	1513.6	1522.5	1543.5	1577.6	1592.5	1652.0	1670.4	1680.0	1725.5	1788.8	1795.2	1817.6
	Output	3.5	3.2	3.2	3.5	3.5	3.2	3.5	3.5	3.2	3.2	3.5	3.2	3.2	3.2
	Input	(25 x 17)	(59 x 8)	(43 x 11)	(29 x 15)	(21 x 21)	(29 x 17)	(35 x 13)	(59 x 8)	(87 x 6)	(35 x 15)	(29 x 17)	(43 x 13)	(51 x 11)	(71 x 8)
Nominal Ratio	Overall	1827	1838	1904	1949	1964	1988	2000	2064	2077	2083	2132	2188	2227	2258
	Input	522	525	595	609	561	568	625	645	649	595	609	625	696	645
Exact Ratio	Overall	1827.0	1837.5	1904.0	1948.8	1963.5	1988.0	2000.0	2064.0	2076.8	2082.5	2131.5	2187.5	2227.2	2257.5
	Output	3.5	3.5	3.2	3.2	3.5	3.5	3.2	3.2	3.2	3.5	3.5	3.5	3.2	3.5
	Input	(87 x 6)	(35 x 15)	(35 x 17)	(29 x 21)	(51 x 11)	(71 x 8)	(25 x 25)	(43 x 15)	(59 x 11)	(35 x 17)	(29 x 21)	(25 x 25)	(87 x 8)	(43 x 15)
Nominal Ratio	Overall	2320	2339	2352	2436	2448	2454	2499	2538	2573	2678	2685	2691	2734	2774
	Input	725	731	735	696	765	767	781	725	735	765	767	841	781	867
Exact Ratio	Overall	2320.0	2339.2	2352.0	2436.0	2448.0	2454.4	2499.2	2537.5	2572.5	2677.5	2684.5	2691.2	2733.5	2774.4
	Output	3.2	3.2	3.2	3.5	3.2	3.2	3.2	3.5	3.5	3.5	3.5	3.2	3.5	3.2
	Input	(29 x 25)	(43 x 17)	(35 x 21)	(87 x 8)	(51 x 15)	(59 x 13)	(71 x 11)	(29 x 25)	(35 x 21)	(51 x 15)	(59 x 13)	(29 x 29)	(71 x 11)	(51 x 17)
Nominal Ratio	Overall	2800	2832	2890	2954	3035	3062	3063	3098	3161	3210	3231	3248	3350	3408
	Input	875	885	903	923	867	957	875	885	903	1003	923	1015	957	1065
Exact Ratio	Overall	2800.0	2832.0	2889.6	2953.6	3034.5	3062.4	3062.5	3097.5	3160.5	3209.6	3230.5	3248.0	3349.5	3408.0
	Output	3.2	3.2	3.2	3.2	3.5	3.2	3.5	3.5	3.5	3.2	3.5	3.2	3.5	3.2
	Input	(35 x 25)	(59 x 15)	(43 x 21)	(71 x 13)	(51 x 17)	(87 x 11)	(35 x 25)	(59 x 15)	(43 x 21)	(59 x 17)	(71 x 13)	(35 x 29)	(87 x 11)	(71 x 15)
Nominal Ratio	Overall	3427	3440	3553	3619	3728	3749	3763	3862	3920	3965	3990	4080	4176	4225
	Input	1071	1075	1015	1131	1065	1071	1075	1207	1225	1239	1247	1275	1305	1207
Exact Ratio	Overall	3427.2	3440.0	3552.5	3619.2	3727.5	3748.5	3762.5	3862.4	3920.0	3964.8	3990.4	4080.0	4176.0	4224.5
	Output	3.2	3.2	3.5	3.2	3.5	3.5	3.5	3.2	3.2	3.2	3.2	3.2	3.2	3.5
	Input	(51 x 21)	(43 x 25)	(35 x 29)	(87 x 13)	(71 x 15)	(51 x 21)	(43 x 25)	(71 x 17)	(35 x 35)	(59 x 21)	(43 x 29)	(51 x 25)	(87 x 15)	(71 x 17)
Nominal Ratio	Overall	4288	4337	4463	4568	4720	4771	4816	5163	5219	5268	5475	5680	5712	5846
	Input	1225	1239	1275	1305	1475	1491	1505	1475	1491	1505	1711	1775	1785	1827
Exact Ratio	Overall	4287.5	4336.5	4462.5	4567.5	4720.0	4771.2	4816.0	5162.5	5218.5	5267.5	5475.2	5680.0	5712.0	5846.4
	Output	3.5	3.5	3.5	3.5	3.2	3.2	3.2	3.5	3.5	3.5	3.2	3.2	3.2	3.2
	Input	(35 x 35)	(59 x 21)	(51 x 25)	(87 x 15)	(59 x 25)	(71 x 21)	(43 x 35)	(59 x 25)	(71 x 21)	(43 x 35)	(59 x 29)	(71 x 25)	(51 x 35)	(87 x 21)
Nominal Ratio	Overall	5917	5989	6213	6248	6395	6589	6608	6960	7018	7207	7613	7676	7952	8074
	Input	1849	1711	1775	1785	1827	2059	2065	2175	2193	2059	2175	2193	2485	2523
Exact Ratio	Overall	5916.8	5988.5	6212.5	6247.5	6394.5	6588.8	6608.0	6960.0	7017.6	7206.5	7612.5	7675.5	7952.0	8073.6
	Output	3.2	3.5	3.5	3.5	3.5	3.2	3.2	3.2	3.2	3.5	3.5	3.5	3.2	3.2
	Input	(43 x 43)	(59 x 29)	(71 x 25)	(51 x 35)	(87 x 21)	(71 x 29)	(59 x 35)	(87 x 25)	(51 x 43)	(71 x 29)	(87 x 25)	(51 x 43)	(71 x 35)	(87 x 29)
Nominal Ratio	Overall	8118	8323	8698	8831	9104	9629	9744	9770	10532	10686	11139	11587	11971	
	Input	2537	2601	2485	2523	2601	3009	3045	3053	3009	3053	3481	3621	3741	
Exact Ratio	Overall	8118.4	8323.2	8697.5	8830.5	9103.5	9628.8	9744.0	9769.6	10531.5	10685.5	11139.2	11587.2	11971.2	
	Output	3.2	3.2	3.5	3.5	3.5	3.2	3.2	3.2	3.5	3.5	3.2	3.2	3.2	
	Input	(59 x 43)	(51 x 51)	(71 x 35)	(87 x 29)	(51 x 51)	(59 x 51)	(87 x 35)	(71 x 43)	(59 x 51)	(71 x 43)	(59 x 59)	(71 x 51)	(87 x 43)	
Nominal Ratio	Overall	12674	13094	13405	14198	14662	16131	16426	17644	19766	24221				
	Input	3621	3741	4189	4437	4189	5041	5133	5041	6177	7569				
Exact Ratio	Overall	12673.5	13093.5	13404.8	14198.4	14661.5	16131.2	16425.6	17643.5	19766.4	24220.8				
	Output	3.5	3.5	3.2	3.2	3.5	3.2	3.2	3.5	3.2	3.2				
	Input	(71 x 51)	(87 x 43)	(71 x 59)	(87 x 51)	(71 x 59)	(71 x 71)	(87 x 59)	(71 x 71)	(87 x 71)	(87 x 87)				

All ratios listed include double reduction Cyclo® inputs. Consult factory for available frame sizes and ratings.

2

How to Select

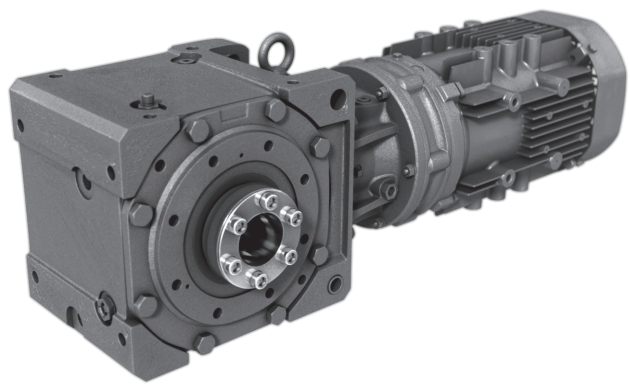

Sold & Serviced By:
ELECTROMATE
Toll Free Phone (877) SERVO98
www.electromate.com
sales@electromate.com

How to select a Gearmotor

Step 1: **Collect data about your application**

Before starting you need to know the:

- **Application (e.g. Conveyor, Mixer, etc.)**
- **Hours of Operation per day**
- **Motor Power (HP or kW) and Speed (RPM)**
- **Desired Output Speed**
- **Mounting Position and Style**
- **Overhung or Thrust Loads**
- **Bore Dimensions, inch or metric**
- **Electrical Specifications**

Step 2: **Choose a Mounting Position**

Find the correct Mounting Position from the *Mounting Positions Drawing* on the right (larger images on page 1.8), additional positions on pages 1.9 to 1.13.

Step 3: **Select Frame Size**

3A: Find the Load Classification of your application in the *AGMA Load Classification Tables* on pages 2.6 to 2.7.

3B: Go to the *Gearmotor Selection Table (starts on page 2.9)* that corresponds to the desired **Mounting Position** and **Motor Power**. Find the **Output Speed** closest to the desired output speed.

3C: Locate the **Service Class** in the *Gearmotor Selection Table (starts on page 2.9)* for your application and select the **Frame Size Selection** that matches the HP or kW, Output Speed, and Service Class.

Step 4: **Verify Dimensions**

Use the Dimensions information starting on page 2.131 to verify that the selected Frame Size is appropriate.

Step 5: **If Selecting a Unit with a Taper Grip Bushing or Keyed Hollow Bore**

Please specify desired bore size. Refer to page 3.11 for availability.

Step 6: **Choose Options**

Please refer to Option section 3.1 and for additional available options please refer to our online Product Configurator at *www. sumitomodrive.com/configurator*

Step 7: **Configure a Model Number**

Go to pages 2.4 thru 2.5 to configure a model number.
Note: You will use the information you gather from the procedure on this page to configure a model number.

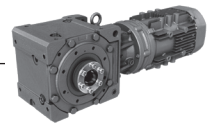

Mounting Positions

Y1

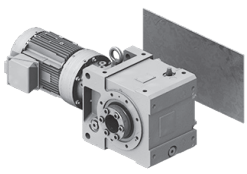

Y2

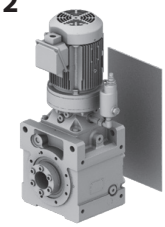

Y3

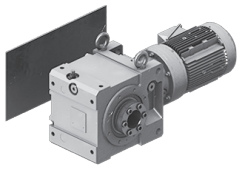

Y4

Y5

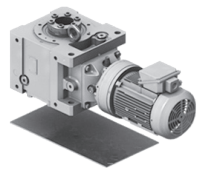

Y6

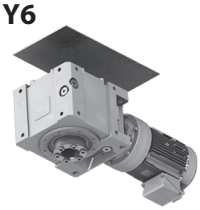

Select a Frame Size

Selection Tables

- **Mounting Position** → **Y1, Y2, Y3, Y5, Y6 Mounting Positions**[1]

Dimension Pages:
Single Reduction 3.282 - 3.295
Single Reduction, AF-Motor 3.296 - 3.307
Single Reduction, Y2 3.308-3.309
Double Reduction 3.310- 3.327
Double Reduction, AF-Motor 3.328 - 3.341
Double Reduction, Y2 3.342 - 3.343

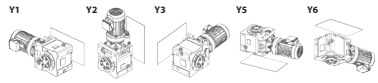

- **Motor Power (HP or kW)**

Frequency	Hz	50	60
Number of Poles	P	4	
Input Speed	RPM	1450	1750

1HP (0.75kW)

- **Output Speed**
- **Service Class**
- **SELECTION**

50Hz							60Hz							Selection			
Output Speed (RPM)	Output Torque		Service Factor		Solid Shaft Overhung Load		Output Speed (RPM)	Output Torque		Service Factor		Solid Shaft Overhung Load		Base			VFD
	in•lbs	(N•m)	SF	AGMA Class	lbs	(N)		in•lbs	(N•m)	SF	AGMA Class	lbs	(N)	Motor Power Code	Frame Size	Ratio	
24.4	2400	(271)	2.65	III	6050	(26900)	29.4	1990	(225)	2.65	III	6090	(27100)	1	**4A100**	60	●
21.6	2710	(306)	2.53	III	6020	(26800)	26.0	2250	(254)	2.57	III	6070	(27000)	1	**4A100**	67	●
19.7	2960	(335)	2.57	III	6000	(26700)	23.8	2450	(277)	2.57	III	6050	(26900)	1	**4A100**	74	●
18.1	3220	(364)	1.69	II	5960	(26500)	21.9	2670	(302)	1.69	II	6020	(26800)	1	**4A100**	80	●
			2.23	III	5960	(26500)				2.23	III	6020	(26800)	1	**4A105**	80	●
			2.55	III	5960	(26500)				2.55	III	6020	(26800)	1	**4A110**	80	●
			2.96	III	5960	(26500)				2.96	III	6020	(26800)	1	**4A115**	80	●
16.6	3530	(399)	1.69	II	5930	(26400)	20.0	2920	(330)	1.69	II	6000	(26700)	1	**4A100**	88	●
			2.23	III	5930	(26400)				2.23	III	6000	(26700)	1	**4A105**	88	●
			2.55	III	5930	(26400)				2.55	III	6000	(26700)	1	**4A110**	88	●
			2.96	III	5930	(26400)				2.96	III	6000	(26700)	1	**4A115**	88	●
14.3	4090	(462)	1.61	II	5850	(26000)	17.2	3390	(383)	1.61	II	5960	(26500)	1	**4A100**	102	●
			2.12	III	5850	(26000)				2.12	III	5960	(26500)	1	**4A105**	102	●
			2.53	III	5850	(26000)				2.53	III	5960	(26500)	1	**4A110**	102	●
			2.79	III	5850	(26000)				2.79	III	5960	(26500)	1	**4A115**	102	●

STOCK BUSHING BORES

Size	Stock Bushing Bores Inch	*(mm)*	Minimum Bores Inch	*(mm)*
4A	$1\frac{15}{16}$, $2\frac{3}{16}$	*(50, 55)*	$1\frac{11}{16}$	(35)
4B	$2\frac{3}{16}$, $2\frac{7}{16}$	*(60, 65)*	$1\frac{15}{16}$	(45)
4C	$2\frac{7}{16}$, $2\frac{15}{16}$	*(65, 75)*	$2\frac{3}{16}$	(50)
4D	$2\frac{15}{16}$, $3\frac{7}{16}$	*(75, 85)*	$2\frac{7}{16}$	(60)
4E	$3\frac{7}{16}$, $3\frac{15}{16}$	*(90, 100)*	$2\frac{15}{16}$	(75)
4F	$3\frac{15}{16}$, $4\frac{7}{16}$, $4\frac{15}{16}$	*(110, 120)*	$3\frac{1}{2}$	(90)

For special circumstances in selecting a **Frame Size** such as:

- Overhung Load
- Thrust Loads
- Radial Loads
- Shock Loading

Consult Technical Information Section 4.1.

If Overhung Load is present, any Overhung Load must be checked against the capacity of the selection.

Configure a Model Number

Required to be added at end of model number when ordering:

- **Motor specifications (230/460 VAC 60 Hz is supplied, unless otherwise specified)**
- **Taper Grip Bushing or Keyed Hollow Bore or Output Shaft or Shrink Disc diameter must be specified (refer to pages 3.11 to 3.13 for diameters), example on page 3.14**
- **Optional Industry Package SSC code, refer to page 3.14**

Optional conduit box positions available, please reference pages 4.26 to 4.28 for details.

Output Shaft Orientation

Type	Code
Horizontal	**H**
Vertical	**V**
Vertical Up (Solid Shaft)	**W**

Note: V and H units have the same dimensions as H base units. V and W are only used for mounting positions *F5, *G5, *K5, *V5, *Y5, *F6, *G6, *K6, *V6, *Y6

Mounting Style

Type	Code
Shaft Mount (Hollow Shaft) page 3.2	**Y**
Housing Mount (Solid Shaft) page 3.3	**U**
Flange (Solid Shaft) page 3.4	**F**
Foot (Solid Shaft) page 3.4	**H**

Input Connection

Type of Input	Code Gearmotor
Gearmotor	**M**

Modification

Type	Code
Unit built with special modifications including, Shrink Disc	**S**
No special modifications applied	

Frame Size

Single Reduction Input			
4A100	4B125	4C170	4E175
4A105	4B140	4C175	4E180
4A110	4B145	4D160	4E185
4A115	4B160	4D165	4E190
4A120	4B165	4D170	4E195
4A125	4C140	4D175	4F180
4A140	4C145	4D180	4F185
4A145	4C160	4D185	4F190
4B120	4C165	4E170	4F195

Double Reduction Input			
4A10DA	4B16DA	4C17DC	4E17DC
4A12DA	4B16DB	4D16DA	4E18DA
4A12DB	4B16DC	4D16DB	4E18DB
4A14DA	4C14DA	4D16DC	4E19DA
4A14DB	4C14DB	4D17DA	4E19DB
4A14DC	4C14DC	4D17DB	4F18DA
4B12DA	4C16DA	4D17DC	4F18DB
4B12DB	4C16DB	4D18DA	4F19DA
4B14DA	4C16DC	4D18DB	4F19DB
4B14DB	4C17DA	4E17DA	
4B14DC	4C17DB	4E17DB	

Motor Power
(applies only to 1750 RPM)

HP	*kW*	Code
1/8		**01**
1/4		**02**
1/3		**03**
1/2		**05**
3/4		**08**
1	*(0.75)*	**1**
1 1/2	*(1.1)*	**1H**
2	*(1.5)*	**2**
3	*(2.2)*	**3**
5	*(3.7)*	**5**
7 1/2	*(5.5)*	**8**
EP 10	*(7.5)*	**10**
15	*(11)*	**15**
20	*(15)*	**20**
25	*(18.5)*	**25**
30	*(22)*	**30**
40	*(30)*	**40**
50	*(37)*	**50**
60	*(45)*	**60**

AGMA Class

Class	Code
I	**A**
II	**B**
III	**C**

Motor Specification

Specification	Code
AF Motor (Inverter Duty 1/8 HP to 3/4 HP)	**AV**
Inverter Ready Motor Premium Efficiency (1+HP), IE3	**EP**
*DC Motor	**DV**
*Low Backlash	**LB**
*Servo Motor	**SV**
Torque Limiter	**TL**

*For Techincal Information please contact customer service.

Note: When there are multiple suffices, sequence them alphabetically. Ex.: EPTL

Brake

	Code
With Brake	B
No Brake	–

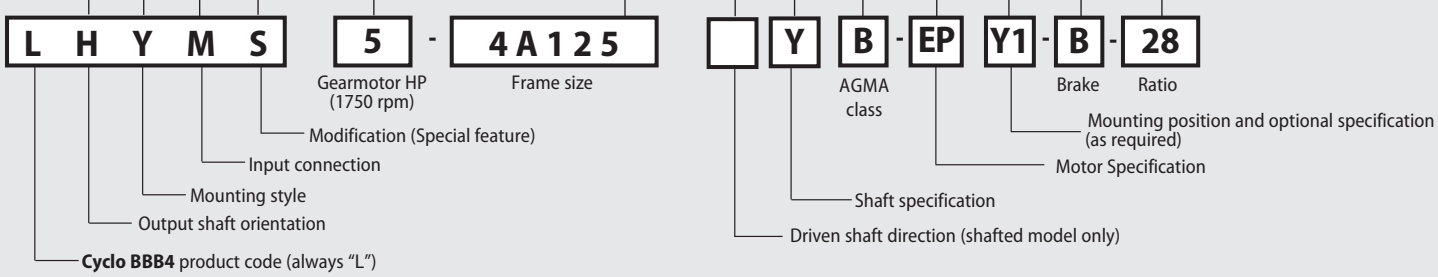

Nomenclature

Driven Shaft Direction (Shafted Model Only)

Projects to Left Side	L	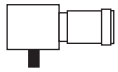
Projects to Right Side	R	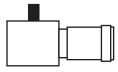
Projects to Both Left/Right Sides	T	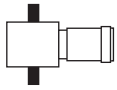

Shaft Specifications

Input Shaft	OUTPUT SHAFT Hollow	OUTPUT SHAFT Solid	Code
mm	Key (mm)	mm	
Inch	Key (Inch)	Inch	**K**
mm	Taper Grip		**M**
Inch	Taper Grip		**Y**

Mounting Positions

For selection refer to page 1.8 to 1.14

F1	G1	K1	V1	Y1
F2	G2	K2	V2	Y2
F3	G3	K3	V3	Y3
F4	G4	K4	V4	Y4
F5*	G5*	K5*	V5*	Y5*
F6*	G6*	K6*	V6*	Y6*

Note: * = Only available for vertical output shaft orientations (LV or LW).

Nominal Ratios

BBB4 with Planetary Input
Overall Nominal Ratio
11
13
14
16
18

BBB4 with Cyclo Input	
Single Reduction Input	Double Reduction Input
Overall Nominal Ratio	Overall Nominal Ratio
21	364
22	424
25	501
28	578
35	683
39	809
46	956
53	1117
60	1320
67	1656
74	1957
80	2272
88	2559
102	2944
112	3511
123	4365
151	5177
179	6472
207	7228
249	8880
305	10658
417	12184

Nomenclature Example:

LHYMS5 – 4A125YB –EPY1– B – 28

L – Cyclo Bevel Buddybox
H – Horizontal
Y – Shaft Mount (Hollow Shaft)
M – Integral Motor
S – Modification (Special Feature)
5 – 5 HP *(3 kW)*, 1750 RPM
4A125 – Frame Size
Y – Taper-Grip® Bushing output
B – AGMA Class II
EP – Three-Phase Motor Premium Efficiency
Y1 – Installation Position
B – Brake
28 – Ratio

Sold & Serviced By:
ELECTROMATE
Toll Free Phone (877) SERVO98
www.electromate.com
sales@electromate.com

Step 3A - AGMA Load Classifications: Gearmotors

Select Service factor by Method A or B or C:

Method A - Gearmotor Classification by LOAD

DURATION OF SERVICE	GEARMOTOR CLASS UNIFORM LOAD	MODERATE SHOCK LOAD	HEAVY SHOCK LOAD
Intermittent 3 hours per day	Class I	Class I	Class II
Up to 10 hours per day	Class I	Class II	Class III
24 hours per day	Class II	Class III	—

Class I = Steady loads not exceeding normal motor rating, 8 to 10 hours a day. Moderate shock loads where service is intermittent (AGMA Service Factor: 1.0).
Class II = Steady loads not exceeding normal motor rating and 24 hours a day service. Moderate shock loads for 8 hours a day (AGMA Service Factor: 1.4).
Class III = Moderate shock loads for 24 hours a day or heavy shock loads for 8 hours a day (AGMA Service Factor: 2.0)
Note: Selections without an AGMA Class designation are torque based selections generally used for intermittent service.

Method B - Recommended Service Factors for Frequent Start-Stop Applications for EP Motors

For frequent start-stop applications with motor operated across the line, use the table below to determine the recommended service factor, and check the Motor Thermal Rating (Table 4.30) in Section 4. For determination of moment of inertia, see page 4.30.

Number of start-stops (Times/hour)	~ 10 hours/day I	II	III	~24 hours/day I	II	III
~10	1	1.1	1.35	1.2	1.25	1.5
~200	1.1	1.3	1.5	1.25	1.5	1.65
~500	1.15	1.45	1.6	1.3	1.6	1.75
1	1	1.1	1.35	1.2	1.25	1.5
~3	1	1.2	1.45	1.2	1.35	1.55
~10	1	1.3	1.5	1.2	1.45	1.65
~60	1	1.4	1.6	1.2	1.65	1.8

Three-phase motors from 1/8 HP to 3/4 (0.1 to 0.55 kW)

Premium Efficiency three-phase motors 1HP to 75 HP (0.75 to 55 kW), high-efficiency three-phase motors from 1/4 HP to 1/2 HP (0.2 to 0.4 kW)

$$\text{Inertia (Moment of Inertia } WR^2\text{) Ratio} = \frac{\text{Total Moment of Inertia } (WR^2) \text{ as seen from motor shaft}}{\text{Moment of Inertia } (WR^2) \text{ of motor}}$$

I = Allowable Inertia (WR^2) Ratio: Inertia Ratio ≤ 0.3
II = Allowable Inertia (WR^2) Ratio: 0.3 < Inertia Ratio ≤ 3.0
III = Allowable Inertia (WR^2) Ratio: 3.0 < Inertia Ratio ≤ 10.0

Note: 1. The number of start-stops includes brake or clutch operation times.
2. Consult us when starting under loaded conditions such as torque or radial load.
3. Consult us when start-stop frequency or Moment of Inertia Ration exceeds that shown above.

Specification Inspection Items
- if there is a shoulder bolt or knockpin used on mating surface of reducer
- change in case material
- if using high frequency brake

Method C - Load Classification by INDUSTRY

Application	Class: Up to 10 Hr. Per Day	24 Hr. Per Day
Brewing & Distilling		
Bottling Machinery	I	II
Brew Kettles, Cont. Duty	–	II
Can Filling Machines	I	II
Cookers–Cont. Duty	–	II
Mash Tubs–Cont. Duty	–	II
Scale Hoppers–Frequent Starts	II	II
Clay Working Industry		
Brick Press	III	III
Briquette Machines	III	III
Clay Working Machinery	II	II
Pug Mills	II	II
Distilling (See Brewing)		
Dredges		
Cable Reels	II	–
Conveyors	II	II
Cutter Head Drives	III	III
Jig Drives	III	III
Maneuvering Winches	II	–
Pumps	II	II
Screen Drives	III	III
Stackers	II	II
Utility Winches	II	–
Food Industry		
Beet Slicers	II	II
Bottlings, Can Filling Mach.	I	II
Cereal Cookers	I	II
Dough Mixers	II	II
Meat Grinders	II	II

Application	Class: Up to 10 Hr. Per Day	24 Hr. Per Day
Lumber Industry		
Barkers–Spindle Feed	Consult Factory	
Barkers–Main Drive	Consult Factory	
Carriage Drive	Consult Factory	
Conveyors		
Burner	II	III
Main or Heavy Duty	II	III
Main Log	III	III
Re-Saw Merry-Go-Round	II	III
Slab	III	III
Transfer	II	III
Chains–Floor	II	III
Chains–Green	II	III
Cut-Off Saws–Chain	II	III
Cut-Off Saws–Drag	II	III
Debarking Drums	Consult Factory	
Feeds–Edger	II	III
Feeds–Gang	III	III
Feeds–Trimmer	II	III
Log Deck	III	III
Log Hauls–Incline, Well Type	III	III
Log Turning Devices	III	III
Planer Feed	II	III
Planer Tilting Hoists	II	III
Rolls–Live–Off Bearing–Roll Cases	III	III
Sorting Table	II	III
Tipple Hoist	II	III
Transfers–Chain	II	III
Transfers–Craneway	II	III
Tray Drives	II	III
Oil Industry		
Chillers	II	II

Application	Class: Up to 10 Hr. Per Day	24 Hr. Per Day
Oil Well Pumping	Consult Factory	
Paraffin Filter Press	II	II
Rotary Kilns	II	II
Paper Mills		
Agitators (Mixers)	II	II
Barker–Auxiliaries–Hyd.	Consult Factory	
Barker, Mechanical	Consult Factory	
Barking Drum	Consult Factory	
Beater & Pulper	–	II
Bleacher	–	II
Calenders	–	II
Calenders–Super	–	II
Converting Mach.–Except Cutters–Platers	–	II
Conveyors	–	II
Couch	–	II
Cutters, Platers	–	III
Cylinders	–	II
Dryers	–	II
Felt Stretchers	–	II
Felt Whippers	–	III
Jordans	–	II
Log Haul	–	III
Presses	–	II
Pulp Machine Reels	–	II
Stock Chests	–	II
Suction Rolls	–	II
Washers & Thickeners	–	II
Winders	–	II
Rubber Industry		
Mixer	III	III
Rubber Calender	II	II
Rubber Mill (2 or more)	II	II

Application	Class: Up to 10 Hr. Per Day	24 Hr. Per Day
Sheeter	II	II
Tire Building Machines	Consult Factory	
Tire, Tube Press Openers	Consult Factory	
Tubers & Stainers	II	II
Sewage Disposal		
Aerators	Consult Factory	
Bar Screens	I	II
Chemical Feeders	I	II
Collectors	I	II
Dewatering Screens	II	II
Grit Collectors	I	II
Scum Breakers	II	II
Slow or Rapid Mixers	II	II
Sludge Collectors	I	II
Thickeners	II	II
Vacuum Filters	II	II
Textile Industry		
Batchers	II	II
Calenders	II	II
Card Machines	II	II
Cloth Finishing Machines (Calenders, Dryers, Pads, Tenters, Washers)	II	II
Dry Cans	II	II
Dyeing Machinery	II	II
Knitting Machinery	Consult Factory	
Looms, Mangles, Nappers	II	II
Range Drives	ConsultFactory	
Soapers, Spinners	II	II
Tenter Frames	II	II
Winders	II	II
Yarn Preparatory Machinery (Cards, Spinners, Slashers)	II	II

...table continued on next page.

Method C continued - Load Classification by APPLICATION

Application	Class: Up to 10 Hr. Per Day	Class: 24 Hr. Per Day
Agitators		
Pure Liquids	I	II
Liquids and Solids	II	II
Liquids – Variable Density	II	II
Semi-liquids – Variable Density	II	II
Blowers		
Centrifugal	I	II
Lobe	II	II
Vane	I	II
Brewing and Distilling		
Bottling Machinery	I	II
Brew Kettles – Continuous Duty	–	II
Cookers – Continuous Duty	–	II
Mash Tubs – Continuous Duty	–	II
Scale Hopper Frequent Starts	II	II
Can Filling Machines	I	II
Cane Knives	II	II
Car Dumpers	III	–
Car Pullers – Intermittent Duty	I	–
Clarifiers	I	II
Classifiers	II	II
Clay Working Machinery		
Brick Press	III	III
Briquette Machine	III	III
Clay Working Machinery	II	II
Pug Mill	II	II
Compressors		
Centrifugal	I	II
Lobe	II	II
Reciprocating Multi-Cylinder	II	II
Reciprocating Single Cylinder	III	III
Conveyors – Uniformly Loaded or Fed		
Apron	I	II
Assembly	I	II
Belt	I	II
Bucket	I	II
Chain	I	II
Flight	I	II
Oven	I	II
Screw	I	II
Conveyors – Heavy Duty Not Uniformly Fed		
Apron	II	II
Assembly	II	II
Belt	II	II
Bucket	II	II
Chain	II	II
Flight	II	II
Live Roll (Package)	I	II
Oven	II	II
Reciprocating	III	III
Screw	II	II
Shaker	III	III
Cranes and Hoists		
Main Hoists	III	III
Heavy Duty	III	III
Medium Duty	II	II
Reversing	II	II
Skip Hoists	II	II
Trolley Drive	II	II
Bridge Drive	II	II
Crushers		
Ore	III	III
Stone	III	III
Dredges		
Cable Reels	II	–
Conveyors	II	II
Cutter Head Drives	III	III
Jig Drives	III	III
Maneuvering Winches	II	–
Pumps	II	II
Screen Drive	III	III
Stackers	II	II
Utility Winches	II	–
Elevators		
Bucket – Uniform Load	I	II
Bucket – Heavy Load	II	II
Bucket – Continous	I	II
Centrifugal Discharge	I	II
Escalators	I	II
Freight	I	II
Gravity Discharge	I	II
Man Lifts	Consult Factory	
Passenger Service – Hand Lift	III	–
Fans		
Centrifugal	II	II
Cooling Towers		
Induced Draft	II	II
Forced Draft	Consult Factory	
Induced Draft	II	II
Large (Mine, etc.)	II	II
Large Industrial	II	II
Light (Small Diameter)	I	II
Feeders		
Apron	II	II
Belt	II	II
Disc	I	II
Reciprocating	III	III
Screw	II	II
Food Industry		
Beet Slicer	II	II
Cereal Cooker	I	II
Dough Mixer	II	II
Meat Grinders	II	II
Generators – (Not Welding)	I	II
Hammer Mills	III	III
Laundry Washers		
Reversing	II	II
Laundry Tumblers	II	II
Line Shafts		
Heavy Shock Load	III	III
Moderate Shock Load	II	II
Uniform Load	I	II
Lumber Industry		
Barkers – Spindle Feed	Consult Factory	
Barkers – Main Drive	Consult Factory	
Carriage Drive	Consult Factory	
Conveyors – Burner	II	III
Conveyors – Main or Heavy Duty	II	III
Conveyors – Main Log	III	III
Conveyors – Merry-Go-Round	II	III
Conveyors – Slab	III	III
Conveyors – Transfer	II	III
Conveyors – Waste	II	II
Chains – Floor	II	III
Chains – Green	II	III
Cut-Off Saws – Chain	II	III
Cut-Off Saws – Drag	II	III
Debarking Drums	Consult Factory	
Feeds – Edger	II	III
Feeds – Gang	III	III
Feeds – Trimmer	II	III
Log Deck	III	III
Log Hauls – Incline Well Type	III	III
Log Turning Devices	III	III
Planer Feed	II	III
Planer Tilting Hoists	II	III
Rolls – Live – Off Brg. – Roll Cases	III	III
Sorting Table	II	III
Tipple Hoist	II	III
Transfers – Chain	II	III
Transfers – Craneway	II	III
Tray Drives	II	III
Veneer Lathe Drives	Consult Factory	
Machine Tools		
Bending Roll	II	II
Notching Press – Belt Driven	Consult Factory	
Plate Planer	III	III
Punch Press – Gear Driven	III	III
Tapping Machines	III	III
Other Machine Tools Main Drives	II	II
Auxiliary Drives	I	II
Metal Mills		
Bridle Roll Drives	III	III
Draw Bench – Carriage	III	III
Draw Bench – Main Drive	III	III
Forming Machines	III	III
Pinch Dryer & Scrubber Rolls, Reversing	Consult Factory	
Slitters	II	II
Table Conveyors Non-Reversing	II	III
Reversing	–	III
Winding Reels – Strip	–	III
Wire Drawing & Flattening Machine	II	III
Wire Winding Machine	II	II
Mills, Rotary Type		
Ball	III	III
Cement Kilns		
Dryers & Coolers	II	II
Kilns	II	II
Pebble	III	III
Rod	III	III
Tumbling Barrels	III	III
Mixers		
Concrete Mixers, Continuous	II	II
Concrete Mixers, Intermittent	I	–
Constant Density	I	II
Variable Density	II	II
Oil Industry		
Chillers	II	II
Oil Well Pumping	Consult Factory	
Paraffin Filter Press	II	II
Rotary Kilns	II	II
Paper Mills		
Aerators	Consult Factory	
Agitators (Mixers)	II	II
Barker Auxiliaries, Hydraulic	Consult Factory	
Barker, Mechanical	Consult Factory	
Barking Drum	Consult Factory	
Beater & Pulper	–	II
Bleacher	–	II
Calenders	–	II
Calenders – Super	–	II
Converting Machines, except Cutters, Platers	–	II
Conveyors	–	II
Conveyors, Log	–	III
Couch	–	II
Cutters, Platers	–	III
Cylinders	–	II
Dryers	–	II
Felt Stretcher	–	II
Felt Whipper	–	III
Jordans	–	II
Presses	–	II
Pulp Machines, Reel	–	II
Stock Chests	–	II
Suction Roll	–	II
Washers and Thickeners	–	II
Winders	–	II
Printing Presses	I	II
Pullers		
Barge Haul	III	III
Pumps		
Centrifugal	I	II
Proportioning Reciprocating	II	II
Single Acting 3 or more Cylinders	II	II
Double Acting 2 or more Cylinders	II	II
Single Acting 1 or 2 Cylinders	Consult Factory	
Double Acting Single Cylinder	Consult Factory	
Rotary – Gear Type – Lobe, Vane	I	II
Rubber Industry		
Mixer	III	III
Rubber Calender	II	II
Rubber Mill (2 or more)	II	II
Sheeter	II	II
Tire Building Machines		
Tire & Tube Press Openers		
Tubers & Strainers	II	II
Sewage Disposal		
Equipment Aerators	Consult Factory	
Bar Screens	I	II
Chemical Feeders	I	II
Collectors, Circuline or Straightline	I	II
Dewatering Screens	II	II
Grit Collectors	I	II
Scum Breakers	II	II
Slow or Rapid Mixers	II	II
Sludge Collectors	I	II
Thickeners	II	II
Vacuum Filters	II	II
Screens		
Air Washing	I	II
Rotary – Stone or Gravel	II	II
Traveling Water Intake	I	II
Slab Pushers	II	II
Steering Gear	II	II
Stokers	I	II
Textile Industry		
Batchers	II	II
Calenders	II	II
Card Machines	II	II
Cloth Finishing Machines (Washers, Pads, Tenters) (Dryers, Calenders, etc.)	II	II
Dry Cans	II	II
Dryers	II	II
Dyeing Machinery	II	II
Knitting Machines (Looms, etc.)	Consult Factory	
Looms	II	II
Mangles	II	II
Nappers	II	II
Pads	II	II
Range Drives	Consult Factory	
Slashers	II	II
Soapers	II	II
Spihnners	II	II
Teneter Frames	II	II
Washers	II	II
Winders (Other than Batchers) Yarn Preparatory Machines (Cards, Spinners, Slashers, etc.)	II	II
Windlass	II	II

Constant Torque Speed Ranges: Gearmotors

Table 2.8 Turn Down Ratio (CTSR) for Integral Motors in CONSTANT TORQUE Applications Powered by Variable Frequency Drives.

Motor Specification:	Motor without brake	Motor with Brake	AF Motor (AV suffix)	AF Motor with Brake (AV-B suffix)
1/8 HP (0.1 kW)	**3:1**	**3:1**	**10:1**	**10:1**
1/4 HP (0.2 kW)	**3:1**	**3:1**	**10:1**	**10:1**
1/3 HP (0.25 kW)	**3:1**	**3:1**	**10:1**	**10:1**
1/2 HP (0.4 kW)	**3:1**	**3:1**	**10:1**	**10:1**
3/4 HP (0.55 kW)	**2:1**	**2:1**	**10:1**	**10:1**
1 HP (0.75 kW)	**10:1**	**10:1**	**10:1**	**10:1**
1.5 HP (1.1 kW)	**10:1**	**5:1**	**10:1**	**10:1**
2 HP (1.5 kW)	**10:1**	**4:1**	**10:1**	**10:1**
3 HP (2.2 kW)	**10:1**	**4:1**	**10:1**	**10:1**
5 HP (3.7 kW)	**10:1**	**4:1**	**10:1**	**10:1**
7.5 HP (5.5 kW)	**10:1**	**4:1**	**10:1**	**10:1**
10 HP (7.5 kW)	**10:1**	**6:1**	**10:1**	**10:1**
15 HP (11 kW)	**10:1**	**6:1**	**10:1**	**10:1**
20 HP (15 kW)	**10:1**	**10:1**	**10:1**	**10:1**
25 HP (18.5 kW)	**10:1**	**10:1**	**10:1**	**10:1**
30 HP (22 kW)	**10:1**	**10:1**	**10:1**	**10:1**
40 HP (30 kW)	**10:1**	**10:1**	**10:1**	**10:1**
50 HP (37 kW)	**10:1**	**10:1**	**10:1**	**10:1**
60 HP (45 kW)	**10:1**	**10:1**	**10:1**	**10:1**

Sold & Serviced By:
ELECTROMATE
Toll Free Phone (877) SERVO98
www.electromate.com
sales@electromate.com

Standard Mounting Selection Tables

1/8 HP (0.1 kW)

Standard Mounting Positions:

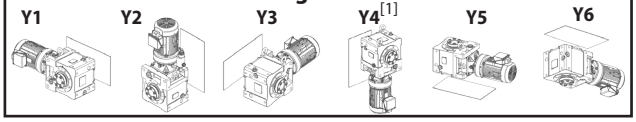

Dimension Pages:

Single Reduction	2.132-2.143
Single Reduction,Y2	2.144
Double Reduction	2.146-2.161
Double Reduction, Y2	2.162

Frequency	50 Hz	60 Hz
Input Speed	1450 RPM	1750 RPM
Number of Poles	4	

50Hz							60 Hz							Selection			
Output Speed (RPM)	Output Torque		Service Factor		Solid Shaft Overhung Load		Output Speed (RPM)	Output Torque		Service Factor		Solid Shaft Overhung Load		Base			VFD[2]
	in•lbs	*(N•m)*	SF	AGMA Class	lbs	*(N)*		in•lbs	*(N•m)*	SF	AGMA Class	lbs	*(N)*	Motor Power Code	Frame Size	Ratio	
3.48	2240	*(253)*	2.10	III	6060	*(27000)*	4.20	1850	*(210)*	2.10	III	6090	*(27100)*	01	**4A100**	417	(*)
			2.86	III	6060	*(27000)*				2.86	III	6090	*(27100)*	01	**4A105**	417	(*)
2.12	3480	*(393)*	2.60	III	5910	*(26300)*	2.56	2880	*(326)*	3.13	III	5990	*(26600)*	01	**4A10DA**	683	(a)
1.79	4120	*(466)*	2.19	III	5810	*(25900)*	2.16	3420	*(386)*	2.64	III	5920	*(26300)*	01	**4A10DA**	809	(a)
			2.77	III	5810	*(25900)*				3.34	III	5920	*(26300)*	01	**4A12DB**	809	(a)
1.52	4870	*(551)*	1.85	II	5670	*(25200)*	1.83	4040	*(456)*	2.24	III	5830	*(25900)*	01	**4A10DA**	956	(a)
			2.34	III	5670	*(25200)*				2.83	III	5830	*(25900)*	01	**4A12DB**	956	(a)
1.30	5690	*(643)*	1.59	II	5490	*(24400)*	1.57	4720	*(533)*	1.91	II	5700	*(25400)*	01	**4A10DA**	1117	(a)
			2.00	III	5490	*(24400)*				2.42	III	5700	*(25400)*	01	**4A12DB**	1117	(a)
1.10	6730	*(760)*	1.34	I	5200	*(23100)*	1.33	5580	*(630)*	1.62	II	5510	*(24500)*	01	**4A10DA**	1320	(a)
			1.70	II	5200	*(23100)*				2.05	III	5510	*(24500)*	01	**4A12DA**	1320	(a)
			2.82	III	9710	*(43200)*				3.40	III	9820	*(43700)*	01	**4B12DA**	1320	(a)
0.876	8440	*(954)*	1.07	I	4560	*(20300)*	1.06	7000	*(791)*	1.29	I	5110	*(22700)*	01	**4A10DA**	1656	(a)
			1.35	I	4560	*(20300)*				1.63	II	5110	*(22700)*	01	**4A12DA**	1656	(a)
			2.25	III	9510	*(42300)*				2.71	III	9680	*(43100)*	01	**4B12DA**	1656	(a)
			2.69	III	9510	*(42300)*				3.25	III	9680	*(43100)*	01	**4B14DA**	1656	(a)
0.741	9980	*(1130)*	0.91	-	3750	*(16700)*	0.894	8270	*(934)*	1.09	I	4640	*(20600)*	01	**4A10DA**	1957	(a)
			1.14	I	3750	*(16700)*				1.38	I	4640	*(20600)*	01	**4A12DA**	1957	(a)
			1.90	II	9290	*(41300)*				2.29	III	9540	*(42400)*	01	**4B12DA**	1957	(a)
			2.28	III	9290	*(41300)*				2.75	III	9540	*(42400)*	01	**4B14DA**	1957	(a)
0.638	11600	*(1310)*	0.99	-	2400	*(10700)*	0.770	9600	*(1080)*	1.19	I	3980	*(17700)*	01	**4A12DA**	2272	(a)
			1.64	II	9020	*(40100)*				1.98	II	9350	*(41600)*	01	**4B12DA**	2272	(a)
			1.96	II	9020	*(40100)*				2.37	III	9350	*(41600)*	01	**4B14DA**	2272	(a)
0.567	13000	*(1470)*	1.45	II	8720	*(38800)*	0.684	10800	*(1220)*	1.75	II	9160	*(40700)*	01	**4B12DA**	2559	(a)
			1.74	II	8720	*(38800)*				2.10	III	9160	*(40700)*	01	**4B14DA**	2559	(a)
0.493	15000	*(1700)*	1.26	I	8240	*(36700)*	0.595	12400	*(1410)*	1.53	II	8850	*(39400)*	01	**4B12DA**	2944	(a)
			2.75	III	15500	*(68900)*				2.86	III	15700	*(69800)*	01	**4C14DA**	2944	(a)
0.413	17900	*(2020)*	1.06	I	7350	*(32700)*	0.499	14800	*(1680)*	1.28	I	8290	*(36900)*	01	**4B12DA**	3511	(a)
			2.30	III	15200	*(67600)*				2.78	III	15500	*(69000)*	01	**4C14DA**	3511	(a)
0.332	22300	*(2520)*	0.85	-	5330	*(23700)*	0.401	18400	*(2080)*	1.03	I	7150	*(31800)*	01	**4B12DA**	4365	(a)
			1.85	II	14700	*(65200)*				2.24	III	15100	*(67300)*	01	**4C14DA**	4365	(a)

Notes: [1] For Y4 Double Reductions (4XXXDX) refer to the above table; for Y4 single reduction refer to tables on pages 2.91-2.130.

[2] Variable Frequency Drive (VFD) notes (see page 2.8 for Constant Torque Speed Ranges):
(*) = AV motor required for selection (AV suffix required on model number, see page 2.4)
(a) = Both AV and non-AV motors can be used for selection.

Standard Mounting Selection Tables

1/4 HP (0.2 kW)

Standard Mounting Positions:

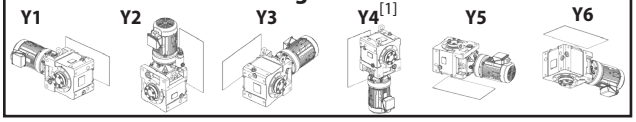

Dimension Pages:

Single Reduction	2.132-2.143
Single Reduction,Y2	2.144
Double Reduction	2.146-2.161
Double Reduction, Y2	2.162

Frequency	50 Hz	60 Hz
Input Speed	1450 RPM	1750 RPM
Number of Poles	4	

50Hz							60 Hz						Selection			
Output Speed (RPM)	Output Torque		Service Factor		Solid Shaft Overhung Load		Output Speed (RPM)	Output Torque		Service Factor		Solid Shaft Overhung Load		Base			VFD[2]
	in•lbs	*(N•m)*	SF	AGMA Class	lbs	*(N)*		in•lbs	*(N•m)*	SF	AGMA Class	lbs	*(N)*	Motor Power Code	Frame Size	Ratio	
8.12	1920	*(217)*	2.80	III	6090	*(27100)*	9.80	1590	*(180)*	2.80	III	6110	*(27200)*	02	**4A100**	179	(a)
7.02	2220	*(251)*	2.58	III	6070	*(27000)*	8.47	1840	*(208)*	2.58	III	6090	*(27100)*	02	**4A100**	207	(a)
5.84	2670	*(302)*	2.18	III	6030	*(26800)*	7.04	2210	*(250)*	2.18	III	6070	*(27000)*	02	**4A100**	249	(a)
			2.53	III	6030	*(26800)*				2.81	III	6070	*(27000)*	02	**4A105**	249	(a)
4.76	3270	*(370)*	2.17	III	5960	*(26500)*	5.75	2710	*(306)*	2.17	III	6020	*(26800)*	02	**4A100**	305	(a)
			2.51	III	5960	*(26500)*				2.83	III	6020	*(26800)*	02	**4A105**	305	(a)
3.98	3710	*(420)*	2.03	III	5880	*(26100)*	4.81	3080	*(348)*	2.03	III	5970	*(26500)*	02	**4A10DA**	364	(a)
3.48	4480	*(506)*	1.05	I	5790	*(25800)*	4.20	3710	*(419)*	1.05	I	5910	*(26300)*	02	**4A100**	417	(a)
			1.43	II	5790	*(25800)*				1.43	II	5910	*(26300)*	02	**4A105**	417	(a)
3.42	4320	*(488)*	2.03	III	5780	*(25700)*	4.13	3580	*(404)*	2.03	III	5900	*(26200)*	02	**4A10DA**	424	(a)
			2.64	III	5780	*(25700)*				3.19	III	5900	*(26200)*	02	**4A12DB**	424	(a)
2.90	5110	*(577)*	1.77	II	5620	*(25000)*	3.50	4230	*(478)*	2.03	III	5790	*(25800)*	02	**4A10DA**	501	(a)
			2.24	III	5620	*(25000)*				2.70	III	5790	*(25800)*	02	**4A12DB**	501	(a)
2.51	5890	*(666)*	1.53	II	5440	*(24200)*	3.03	4880	*(552)*	1.85	II	5670	*(25200)*	02	**4A10DA**	578	(a)
			1.94	II	5440	*(24200)*				2.34	III	5670	*(25200)*	02	**4A12DB**	578	(a)
			3.22	III	9790	*(43600)*				3.89	III	9870	*(43900)*	02	**4B12DB**	578	(a)
2.12	6960	*(787)*	1.30	I	5120	*(22800)*	2.56	5770	*(652)*	1.57	II	5470	*(24300)*	02	**4A10DA**	683	(a)
			1.64	II	5120	*(22800)*				1.98	II	5470	*(24300)*	02	**4A12DB**	683	(a)
			2.03	III	9690	*(43100)*				2.03	III	9800	*(43600)*	02	**4B12DA**	683	(a)
			2.73	III	9690	*(43100)*				3.29	III	9800	*(43600)*	02	**4B12DB**	683	(a)
1.79	8250	*(932)*	1.10	I	4650	*(20700)*	2.16	6830	*(772)*	1.32	I	5170	*(23000)*	02	**4A10DA**	809	(a)
			1.38	I	4650	*(20700)*				1.67	II	5170	*(23000)*	02	**4A12DB**	809	(a)
			2.03	III	9540	*(42400)*				2.03	III	9700	*(43200)*	02	**4B12DA**	809	(a)
			2.30	III	9540	*(42400)*				2.78	III	9700	*(43200)*	02	**4B12DB**	809	(a)
			2.76	III	9540	*(42400)*				3.33	III	9700	*(43200)*	02	**4B14DB**	809	(a)
1.52	9750	*(1100)*	0.93	-	3890	*(17300)*	1.83	8080	*(913)*	1.12	I	4720	*(21000)*	02	**4A10DA**	956	(a)
			1.17	I	3890	*(17300)*				1.41	II	4720	*(21000)*	02	**4A12DB**	956	(a)
			1.95	II	9330	*(41500)*				2.35	III	9560	*(42500)*	02	**4B12DB**	956	(a)
			2.33	III	9330	*(41500)*				2.82	III	9560	*(42500)*	02	**4B14DB**	956	(a)
1.30	11400	*(1290)*	1.00	I	2610	*(11600)*	1.57	9440	*(1070)*	1.21	I	4070	*(18100)*	02	**4A12DB**	1117	(a)
			1.67	II	9050	*(40300)*				2.01	III	9380	*(41700)*	02	**4B12DB**	1117	(a)
			2.00	III	9050	*(40300)*				2.41	III	9380	*(41700)*	02	**4B14DB**	1117	(a)
1.10	13500	*(1520)*	1.41	II	8630	*(38400)*	1.33	11200	*(1260)*	1.70	II	9100	*(40500)*	02	**4B12DA**	1320	(a)
			1.69	II	8630	*(38400)*				2.04	III	9100	*(40500)*	02	**4B14DB**	1320	(a)

Notes: [1] For Y4 Double Reductions (4XXXDX) refer to the above table; for Y4 single reduction refer to tables on pages 2.91-2.130.
[2] Variable Frequency Drive (VFD) notes (see page 2.8 for Constant Torque Speed Ranges):
(a) = Both AV and non-AV motors can be used for selection.

Standard Mounting Selection Tables

1/4 HP (0.2 kW)

Standard Mounting Positions:

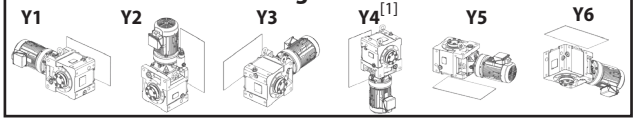

Dimension Pages:

Single Reduction	2.132-2.143
Single Reduction,Y2	2.144
Double Reduction	2.146-2.161
Double Reduction, Y2	2.162

Frequency	50 Hz	60 Hz
Input Speed	1450 RPM	1750 RPM
Number of Poles	4	

50Hz							60 Hz						Selection			
Output Speed (RPM)	Output Torque		Service Factor		Solid Shaft Overhung Load		Output Speed (RPM)	Output Torque		Service Factor		Solid Shaft Overhung Load		Base			VFD[2]
	in•lbs	*(N•m)*	SF	AGMA Class	lbs	*(N)*		in•lbs	*(N•m)*	SF	AGMA Class	lbs	*(N)*	Motor Power Code	Frame Size	Ratio	
0.876	16900	*(1910)*	1.12	I	7690	*(34200)*	1.06	14000	*(1580)*	1.36	I	8500	*(37800)*	02	**4B12DA**	1656	(a)
			1.35	I	7690	*(34200)*				1.63	II	8500	*(37800)*	02	**4B14DB**	1656	(a)
			2.03	III	15300	*(68100)*				2.03	III	15600	*(69300)*	02	**4C14DA**	1656	(a)
			2.44	III	15300	*(68100)*				2.95	III	15600	*(69300)*	02	**4C14DB**	1656	(a)
			2.69	III	15300	*(68100)*				3.25	III	15600	*(69300)*	02	**4C16DA**	1656	(a)
0.741	20000	*(2260)*	0.95	-	6530	*(29000)*	0.894	16500	*(1870)*	1.15	I	7800	*(34700)*	02	**4B12DA**	1957	(a)
			1.14	I	6530	*(29000)*				1.38	I	7800	*(34700)*	02	**4B14DB**	1957	(a)
			2.07	III	15000	*(66600)*				2.50	III	15300	*(68200)*	02	**4C14DB**	1957	(a)
			2.28	III	15000	*(66600)*				2.75	III	15300	*(68200)*	02	**4C16DA**	1957	(a)
0.638	23200	*(2620)*	0.98	-	4730	*(21000)*	0.770	19200	*(2170)*	1.18	I	6850	*(30500)*	02	**4B14DB**	2272	(a)
			1.78	II	14500	*(64600)*				2.15	III	15100	*(67000)*	02	**4C14DB**	2272	(a)
			1.96	II	14500	*(64600)*				2.37	III	15100	*(67000)*	02	**4C16DA**	2272	(a)
			2.73	III	21300	*(94700)*				3.29	III	21500	*(95900)*	02	**4D16DA**	2272	(a)
0.567	26100	*(2950)*	0.87	-	1100	*(4890)*	0.684	21600	*(2440)*	1.05	I	5700	*(25400)*	02	**4B14DA**	2559	(a)
			1.58	II	14100	*(62600)*				1.91	II	14700	*(65600)*	02	**4C14DA**	2559	(a)
			1.74	II	14100	*(62600)*				2.10	III	14700	*(65600)*	02	**4C16DA**	2559	(a)
			2.42	III	21100	*(93700)*				2.92	III	21400	*(95200)*	02	**4D16DA**	2559	(a)
			2.96	III	21100	*(93700)*				3.57	III	21400	*(95200)*	02	**4D17DA**	2559	(a)
0.493	30000	*(3390)*	1.37	I	13300	*(59300)*	0.595	24900	*(2810)*	1.66	II	14300	*(63500)*	02	**4C14DB**	2944	(a)
			2.11	III	20700	*(92100)*				2.54	III	21200	*(94100)*	02	**4D16DA**	2944	(a)
0.413	35800	*(4050)*	1.15	I	11900	*(53100)*	0.499	29700	*(3350)*	1.39	I	13400	*(59600)*	02	**4C14DA**	3511	(a)
			1.77	II	20100	*(89300)*				2.13	III	20700	*(92200)*	02	**4D16DA**	3511	(a)
			2.16	III	20100	*(89300)*				2.60	III	20700	*(92200)*	02	**4D17DA**	3511	(a)
			2.65	III	22000	*(97800)*				3.20	III	22300	*(99200)*	02	**4E17DA**	3511	(a)
0.332	44500	*(5030)*	0.93	-	8830	*(39300)*	0.401	36900	*(4170)*	1.12	I	11600	*(51700)*	02	**4C14DA**	4365	(a)
			1.73	II	18900	*(84000)*				2.09	III	19900	*(88700)*	02	**4D17DA**	4365	(a)
			2.13	III	21500	*(95900)*				2.57	III	21900	*(97600)*	02	**4E17DA**	4365	(a)
0.280	52800	*(5970)*	1.80	II	21100	*(94000)*	0.338	43800	*(4940)*	2.17	III	21600	*(96000)*	02	**4E17DA**	5177	(a)
0.201	73700	*(8330)*	0.86	-	11200	*(49700)*	0.242	61100	*(6900)*	1.04	I	15500	*(68800)*	02	**4D16DA**	7228	(a)
0.136	109000	*(12300)*	0.87	-	15100	*(67000)*	0.164	90100	*(10200)*	1.05	I	19200	*(85600)*	02	**4E17DA**	10658	(a)

Notes: [1] For Y4 Double Reductions (4XXXDX) refer to the above table; for Y4 single reduction refer to tables on pages 2.91-2.130.
[2] Variable Frequency Drive (VFD) notes (see page 2.8 for Constant Torque Speed Ranges):
(a) = Both AV and non-AV motors can be used for selection.

Standard Mounting Selection Tables

1/3 HP (0.25 kW)

Standard Mounting Positions:

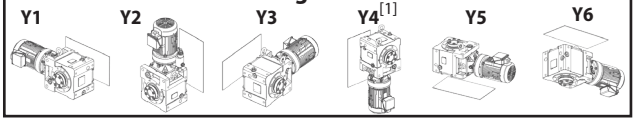

Dimension Pages:

Single Reduction	2.132-2.143
Single Reduction,Y2	2.144
Double Reduction	2.146-2.161
Double Reduction, Y2	2.162

Frequency	50 Hz	60 Hz
Input Speed	1450 RPM	1750 RPM
Number of Poles	4	

50Hz							60 Hz						Selection			
Output Speed (RPM)	Output Torque		Service Factor		Solid Shaft Overhung Load		Output Speed (RPM)	Output Torque		Service Factor		Solid Shaft Overhung Load		Base			VFD[2]
	in•lbs	(N•m)	SF	AGMA Class	lbs	(N)		in•lbs	(N•m)	SF	AGMA Class	lbs	(N)	Motor Power Code	Frame Size	Ratio	
8.12	2400	(271)	2.24	III	6050	(26900)	9.80	1990	(225)	2.24	III	6080	(27100)	03	**4A100**	179	(a)
7.02	2770	(313)	2.06	III	6020	(26800)	8.47	2300	(260)	2.06	III	6060	(27000)	03	**4A100**	207	(a)
			2.72	III	6020	(26800)				2.83	III	6060	(27000)	03	**4A105**	207	(a)
5.84	3340	(377)	1.74	II	5950	(26500)	7.04	2770	(313)	1.74	II	6020	(26800)	03	**4A100**	249	(a)
			2.02	III	5950	(26500)				2.24	III	6020	(26800)	03	**4A105**	249	(a)
			2.68	III	5950	(26500)				2.68	III	6020	(26800)	03	**4A110**	249	(*)
4.76	4090	(462)	1.73	II	5850	(26000)	5.75	3390	(383)	1.73	II	5950	(26500)	03	**4A100**	305	(a)
			2.01	III	5850	(26000)				2.26	III	5950	(26500)	03	**4A105**	305	(a)
			2.64	III	5850	(26000)				2.64	III	5950	(26500)	03	**4A110**	305	(*)
			2.79	III	5850	(26000)				2.79	III	5950	(26500)	03	**4A115**	305	(*)
3.98	4640	(524)	1.63	II	5720	(25400)	4.81	3850	(435)	1.63	II	5860	(26100)	03	**4A10DA**	364	(a)
			2.46	III	5720	(25400)				2.97	III	5860	(26100)	03	**4A12DB**	364	(a)
3.48	5600	(632)	1.14	I	5580	(24800)	4.20	4640	(524)	1.14	I	5760	(25600)	03	**4A105**	417	(a)
3.42	5400	(610)	1.63	II	5560	(24700)	4.13	4470	(506)	1.63	II	5750	(25600)	03	**4A10DA**	424	(a)
			2.11	III	5560	(24700)				2.55	III	5750	(25600)	03	**4A12DB**	424	(a)
2.90	6380	(721)	1.42	II	5300	(23600)	3.50	5290	(597)	1.63	II	5580	(24800)	03	**4A10DA**	501	(a)
			1.79	II	5300	(23600)				2.16	III	5580	(24800)	03	**4A12DB**	501	(a)
			2.97	III	9750	(43400)				3.59	III	9840	(43800)	03	**4B12DB**	501	(a)
2.51	7360	(832)	1.23	I	4990	(22200)	3.03	6100	(689)	1.48	II	5380	(23900)	03	**4A10DA**	578	(a)
			1.55	II	4990	(22200)				1.87	II	5380	(23900)	03	**4A12DB**	578	(a)
			2.58	III	9640	(42900)				3.11	III	9770	(43500)	03	**4B12DB**	578	(a)
2.12	8700	(983)	1.04	I	4440	(19800)	2.56	7210	(815)	1.25	I	5040	(22400)	03	**4A10DA**	683	(a)
			1.31	I	4440	(19800)				1.58	II	5040	(22400)	03	**4A12DB**	683	(a)
			1.63	II	9480	(42200)				1.63	II	9660	(43000)	03	**4B12DA**	683	(a)
			2.18	III	9480	(42200)				2.63	III	9660	(43000)	03	**4B12DB**	683	(a)
			2.61	III	9480	(42200)				3.15	III	9660	(43000)	03	**4B14DB**	683	(a)
1.79	10300	(1160)	0.88	-	3530	(15700)	2.16	8540	(965)	1.06	I	4520	(20100)	03	**4A10DA**	809	(a)
			1.11	I	3530	(15700)				1.34	I	4520	(20100)	03	**4A12DB**	809	(a)
			1.63	II	9240	(41100)				1.63	II	9500	(42300)	03	**4B12DA**	809	(a)
			1.84	II	9240	(41100)				2.22	III	9500	(42300)	03	**4B12DB**	809	(a)
			2.21	III	9240	(41100)				2.66	III	9500	(42300)	03	**4B14DB**	809	(a)
1.52	12200	(1380)	0.94	-	1530	(6830)	1.83	10100	(1140)	1.13	I	3670	(16300)	03	**4A12DB**	956	(a)
			1.56	II	8900	(39600)				1.88	II	9280	(41300)	03	**4B12DB**	956	(a)
			1.87	II	8900	(39600)				2.25	III	9280	(41300)	03	**4B14DB**	956	(a)
1.30	14200	(1610)	1.33	I	8440	(37600)	1.57	11800	(1330)	1.61	II	8980	(39900)	03	**4B12DB**	1117	(a)
			1.60	II	8440	(37600)				1.93	II	8980	(39900)	03	**4B14DB**	1117	(a)
			2.90	III	15600	(69200)				3.50	III	15700	(70000)	03	**4C14DB**	1117	(a)

Notes: [1] For Y4 Double Reductions (4XXXDX) refer to the above table; for Y4 single reduction refer to tables on pages 2.91-2.130.

[2] Variable Frequency Drive (VFD) notes (see page 2.8 for Constant Torque Speed Ranges):
(*) = AV motor required for selection (AV suffix required on model number, see page 2.4)
(a) = Both AV and non-AV motors can be used for selection.

Standard Mounting Selection Tables

1/3 HP (0.25 kW)

Standard Mounting Positions:

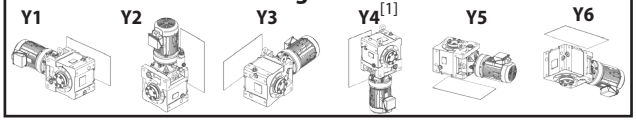

Dimension Pages:

Single Reduction	2.132-2.143
Single Reduction,Y2	2.144
Double Reduction	2.146-2.161
Double Reduction, Y2	2.162

Frequency	50 Hz	60 Hz
Input Speed	1450 RPM	1750 RPM
Number of Poles	4	

50Hz							60 Hz						Selection			
Output Speed (RPM)	Output Torque		Service Factor		Solid Shaft Overhung Load		Output Speed (RPM)	Output Torque		Service Factor		Solid Shaft Overhung Load		Base			VFD[2]
	in•lbs	*(N•m)*	SF	AGMA Class	lbs	*(N)*		in•lbs	*(N•m)*	SF	AGMA Class	lbs	*(N)*	Motor Power Code	Frame Size	Ratio	
1.10	16800	*(1900)*	1.13	I	7710	*(34300)*	1.33	13900	*(1580)*	1.36	I	8510	*(37900)*	03	**4B12DA**	1320	(a)
			1.35	I	7710	*(34300)*				1.63	II	8510	*(37900)*	03	**4B14DB**	1320	(a)
			2.45	III	15300	*(68100)*				2.96	III	15600	*(69300)*	03	**4C14DB**	1320	(a)
			2.70	III	15300	*(68100)*				3.26	III	15600	*(69300)*	03	**4C16DA**	1320	(a)
0.876	21100	*(2390)*	0.90	-	5980	*(26600)*	1.06	17500	*(1980)*	1.08	I	7490	*(33300)*	03	**4B12DA**	1656	(a)
			1.08	I	5980	*(26600)*				1.30	I	7490	*(33300)*	03	**4B14DB**	1656	(a)
			1.63	II	14800	*(65900)*				1.63	II	15200	*(67800)*	03	**4C14DA**	1656	(a)
			1.95	II	14800	*(65900)*				2.36	III	15200	*(67800)*	03	**4C14DB**	1656	(a)
			2.16	III	14800	*(65900)*				2.60	III	15200	*(67800)*	03	**4C16DA**	1656	(a)
			3.00	III	21400	*(95300)*				3.62	III	21600	*(96300)*	03	**4D16DA**	1656	(a)
0.741	24900	*(2820)*	0.91	-	3130	*(13900)*	0.894	20700	*(2340)*	1.10	I	6200	*(27600)*	03	**4B14DB**	1957	(a)
			1.65	II	14300	*(63400)*				2.00	III	14900	*(66200)*	03	**4C14DB**	1957	(a)
			1.82	II	14300	*(63400)*				2.20	III	14900	*(66200)*	03	**4C16DA**	1957	(a)
			2.54	III	21100	*(94100)*				3.06	III	21500	*(95400)*	03	**4D16DA**	1957	(a)
0.638	29000	*(3270)*	1.42	II	13500	*(60200)*	0.770	24000	*(2710)*	1.72	II	14400	*(64100)*	03	**4C14DB**	2272	(a)
			1.57	II	13500	*(60200)*				1.90	II	14400	*(64100)*	03	**4C16DA**	2272	(a)
			2.18	III	20800	*(92500)*				2.64	III	21200	*(94400)*	03	**4D16DA**	2272	(a)
			2.66	III	20800	*(92500)*				3.22	III	21200	*(94400)*	03	**4D17DA**	2272	(a)
0.567	32600	*(3690)*	1.26	I	12700	*(56700)*	0.684	27000	*(3050)*	1.53	II	13900	*(61800)*	03	**4C14DA**	2559	(a)
			1.39	I	12700	*(56700)*				1.68	II	13900	*(61800)*	03	**4C16DA**	2559	(a)
			1.94	II	20400	*(90900)*				2.34	III	21000	*(93300)*	03	**4D16DA**	2559	(a)
			2.37	III	20400	*(90900)*				2.86	III	21000	*(93300)*	03	**4D17DA**	2559	(a)
			2.91	III	22200	*(98500)*				3.51	III	22400	*(99800)*	03	**4E17DA**	2559	(a)
0.493	37500	*(4240)*	1.10	I	11400	*(50900)*	0.595	31100	*(3510)*	1.33	I	13100	*(58200)*	03	**4C14DB**	2944	(a)
			1.69	II	19900	*(88400)*				2.03	III	20600	*(91600)*	03	**4D16DA**	2944	(a)
			2.06	III	19900	*(88400)*				2.48	III	20600	*(91600)*	03	**4D17DA**	2944	(a)
			2.53	III	21900	*(97400)*				3.05	III	22200	*(98900)*	03	**4E17DA**	2944	(a)
			2.74	III	21900	*(97400)*				3.30	III	22200	*(98900)*	03	**4E18DA**	2944	(a)
0.413	44800	*(5060)*	0.92	-	8720	*(38800)*	0.499	37100	*(4190)*	1.11	I	11600	*(51500)*	03	**4C14DA**	3511	(a)
			1.41	II	18800	*(83800)*				1.71	II	19900	*(88600)*	03	**4D16DA**	3511	(a)
			1.72	II	18800	*(83800)*				2.08	III	19900	*(88600)*	03	**4D17DA**	3511	(a)
			2.12	III	21500	*(95800)*				2.56	III	21900	*(97500)*	03	**4E17DA**	3511	(a)
0.332	55700	*(6290)*	1.39	I	16800	*(74600)*	0.401	46100	*(5210)*	1.67	II	18600	*(82800)*	03	**4D17DA**	4365	(a)
			1.70	II	21000	*(93300)*				2.06	III	21500	*(95500)*	03	**4E17DA**	4365	(a)
			2.71	III	29800	*(132000)*				3.27	III	30200	*(134000)*	03	**4F18DA**	4365	(a)
			2.77	III	29800	*(132000)*				3.34	III	30200	*(134000)*	03	**4F19DA**	4365	(*)
0.280	66000	*(7460)*	1.44	II	20500	*(91000)*	0.338	54700	*(6180)*	1.73	II	21000	*(93600)*	03	**4E17DA**	5177	(a)

Notes: [1] For Y4 Double Reductions (4XXXDX) refer to the above table; for Y4 single reduction refer to tables on pages 2.91-2.130.

[2] Variable Frequency Drive (VFD) notes (see page 2.8 for Constant Torque Speed Ranges):
(*) = AV motor required for selection (AV suffix required on model number, see page 2.4)
(a) = Both AV and non-AV motors can be used for selection.

Standard Mounting Selection Tables

1/2 HP (0.4 kW)

Standard Mounting Positions:

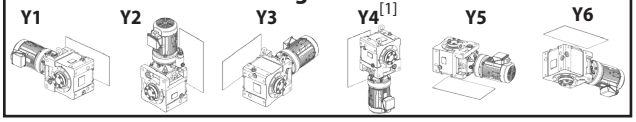

Dimension Pages:

Single Reduction	2.132-2.143
Single Reduction,Y2	2.144
Double Reduction	2.146-2.161
Double Reduction, Y2	2.162

Frequency	50 Hz	60 Hz
Input Speed	1450 RPM	1750 RPM
Number of Poles	4	

50Hz							60 Hz						Selection			
Output Speed (RPM)	Output Torque		Service Factor		Solid Shaft Overhung Load		Output Speed (RPM)	Output Torque		Service Factor		Solid Shaft Overhung Load		Base			VFD[2]
	in•lbs	*(N•m)*	SF	AGMA Class	lbs	*(N)*		in•lbs	*(N•m)*	SF	AGMA Class	lbs	*(N)*	Motor Power Code	Frame Size	Ratio	
12.9	2410	*(272)*	2.44	III	6050	*(26900)*	15.6	2000	*(225)*	2.44	III	6080	*(27100)*	05	**4A100**	112	(a)
			3.00	III	6050	*(26900)*				3.00	III	6080	*(27100)*	05	**4A105**	112	(a)
11.8	2630	*(298)*	2.44	III	6030	*(26800)*	14.3	2180	*(247)*	2.44	III	6070	*(27000)*	05	**4A100**	123	(a)
			3.00	III	6030	*(26800)*				3.00	III	6070	*(27000)*	05	**4A105**	123	(a)
9.63	3240	*(366)*	1.95	II	5970	*(26500)*	11.6	2680	*(303)*	1.95	II	6020	*(26800)*	05	**4A100**	151	(a)
			2.70	III	5970	*(26500)*				2.70	III	6020	*(26800)*	05	**4A105**	151	(a)
8.12	3840	*(434)*	1.40	II	5890	*(26200)*	9.80	3180	*(359)*	1.40	II	5970	*(26600)*	05	**4A100**	179	(a)
			1.94	II	5890	*(26200)*				1.94	II	5970	*(26600)*	05	**4A105**	179	(a)
			2.36	III	5890	*(26200)*				2.36	III	5970	*(26600)*	05	**4A110**	179	(a)
			2.78	III	5890	*(26200)*				2.78	III	5970	*(26600)*	05	**4A115**	179	(a)
			2.98	III	5890	*(26200)*				2.98	III	5970	*(26600)*	05	**4A120**	179	(a)
7.02	4440	*(502)*	1.29	I	5800	*(25800)*	8.47	3680	*(416)*	1.29	I	5910	*(26300)*	05	**4A100**	207	(a)
			1.70	II	5800	*(25800)*				1.77	II	5910	*(26300)*	05	**4A105**	207	(a)
			2.15	III	5800	*(25800)*				2.15	III	5910	*(26300)*	05	**4A110**	207	(a)
			2.53	III	5800	*(25800)*				2.53	III	5910	*(26300)*	05	**4A115**	207	(a)
			2.57	III	5800	*(25800)*				2.57	III	5910	*(26300)*	05	**4A120**	207	(a)
5.84	5340	*(604)*	1.09	I	5630	*(25000)*	7.04	4430	*(500)*	1.09	I	5800	*(25800)*	05	**4A100**	249	(a)
			1.26	I	5630	*(25000)*				1.40	II	5800	*(25800)*	05	**4A105**	249	(a)
			1.67	II	5630	*(25000)*				1.67	II	5800	*(25800)*	05	**4A110**	249	(a)
			1.90	II	5630	*(25000)*				1.90	II	5800	*(25800)*	05	**4A115**	249	(a)
			2.14	III	5630	*(25000)*				2.14	III	5800	*(25800)*	05	**4A120**	249	(a)
			2.39	III	9860	*(43900)*				2.39	III	9920	*(44100)*	05	**4B120**	249	(a)
			2.84	III	9860	*(43900)*				3.00	III	9920	*(44100)*	05	**4B125**	249	(a)
4.76	6550	*(740)*	1.08	I	5350	*(23800)*	5.75	5420	*(613)*	1.08	I	5610	*(25000)*	05	**4A100**	305	(a)
			1.26	I	5350	*(23800)*				1.41	II	5610	*(25000)*	05	**4A105**	305	(a)
			1.65	II	5350	*(23800)*				1.65	II	5610	*(25000)*	05	**4A110**	305	(a)
			1.74	II	5350	*(23800)*				1.74	II	5610	*(25000)*	05	**4A115**	305	(a)
			2.36	III	9760	*(43400)*				2.36	III	9850	*(43800)*	05	**4B120**	305	(a)
			2.57	III	9760	*(43400)*				2.83	III	9850	*(43800)*	05	**4B125**	305	(a)
3.98	7430	*(839)*	1.02	I	4970	*(22100)*	4.81	6150	*(695)*	1.02	I	5370	*(23900)*	05	**4A10DA**	364	C.F.
			1.54	II	4970	*(22100)*				1.86	II	5370	*(23900)*	05	**4A12DB**	364	(a)
			2.55	III	9640	*(42900)*				3.08	III	9770	*(43500)*	05	**4B12DB**	364	(a)
3.42	8640	*(976)*	1.02	I	4470	*(19900)*	4.13	7160	*(809)*	1.02	I	5060	*(22500)*	05	**4A10DA**	424	C.F.
			1.32	I	4470	*(19900)*				1.59	II	5060	*(22500)*	05	**4A12DB**	424	(a)
			2.17	III	9490	*(42200)*				2.62	III	9670	*(43000)*	05	**4B12DB**	424	(a)
			2.63	III	9490	*(42200)*				3.18	III	9670	*(43000)*	05	**4B14DB**	424	(a)

Notes: [1] For Y4 Double Reductions (4XXXDX) refer to the above table; for Y4 single reduction refer to tables on pages 2.91-2.130.

[2] Variable Frequency Drive (VFD) notes (see page 2.8 for Constant Torque Speed Ranges):
C.F. = Consult Factory with ambient temperature data for VFD operation.
(a) = Both AV and non-AV motors can be used for selection.

Standard Mounting Selection Tables

1/2 HP (0.4 kW)

Standard Mounting Positions:

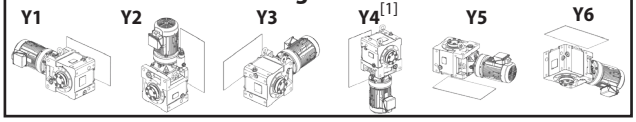

Dimension Pages:

Single Reduction	2.132-2.143
Single Reduction,Y2	2.144
Double Reduction	2.146-2.161
Double Reduction, Y2	2.162

Frequency	50 Hz	60 Hz
Input Speed	1450 RPM	1750 RPM
Number of Poles	4	

50Hz							60 Hz							Selection			
Output Speed (RPM)	Output Torque		Service Factor		Solid Shaft Overhung Load		Output Speed (RPM)	Output Torque		Service Factor		Solid Shaft Overhung Load		Base			VFD[2]
	in•lbs	(N•m)	SF	AGMA Class	lbs	(N)		in•lbs	(N•m)	SF	AGMA Class	lbs	(N)	Motor Power Code	Frame Size	Ratio	
2.90	10200	(1150)	0.88	-	3590	(16000)	3.50	8460	(956)	1.02	I	4550	(20300)	05	**4A10DA**	501	C.F.
			1.12	I	3590	(16000)				1.35	I	4550	(20300)	05	**4A12DB**	501	(a)
			1.86	II	9260	(41200)				2.24	III	9510	(42300)	05	**4B12DB**	501	(a)
			2.23	III	9260	(41200)				2.69	III	9510	(42300)	05	**4B14DB**	501	(a)
2.51	11800	(1330)	0.97	-	2160	(9600)	3.03	9760	(1100)	1.17	I	3880	(17300)	05	**4A12DB**	578	(a)
			1.61	II	8980	(39900)				1.94	II	9330	(41500)	05	**4B12DB**	578	(a)
			1.93	II	8980	(39900)				2.33	III	9330	(41500)	05	**4B14DB**	578	(a)
2.12	13900	(1570)	1.02	I	8520	(37900)	2.56	11500	(1300)	1.02	I	9030	(40100)	05	**4B12DA**	683	C.F.
			1.36	I	8520	(37900)				1.64	II	9030	(40100)	05	**4B12DB**	683	(a)
			1.63	II	8520	(37900)				1.97	II	9030	(40100)	05	**4B14DB**	683	(a)
			2.94	III	15600	(69300)				3.54	III	15800	(70100)	05	**4C14DB**	683	(a)
1.79	16500	(1860)	1.02	I	7820	(34800)	2.16	13700	(1540)	1.02	I	8580	(38200)	05	**4B12DA**	809	C.F.
			1.15	I	7820	(34800)				1.39	I	8580	(38200)	05	**4B12DB**	809	(a)
			1.38	I	7820	(34800)				1.66	II	8580	(38200)	05	**4B14DB**	809	(a)
			2.44	III	15300	(68300)				2.95	III	15600	(69400)	05	**4C14DB**	809	(a)
			2.76	III	15300	(68300)				3.33	III	15600	(69400)	05	**4C16DA**	809	(a)
1.52	19500	(2200)	0.97	-	6730	(29900)	1.83	16200	(1830)	1.17	I	7920	(35200)	05	**4B12DB**	956	(a)
			1.17	I	6730	(29900)				1.41	II	7920	(35200)	05	**4B14DB**	956	(a)
			2.07	III	15000	(66800)				2.49	III	15400	(68400)	05	**4C14DB**	956	(a)
			2.33	III	15000	(66800)				2.82	III	15400	(68400)	05	**4C16DA**	956	(a)
1.30	22800	(2570)	0.83	-	5000	(22200)	1.57	18900	(2130)	1.01	I	6990	(31100)	05	**4B12DB**	1117	(a)
			1.00	I	5000	(22200)				1.21	I	6990	(31100)	05	**4B14DB**	1117	(a)
			1.81	II	14600	(64900)				2.19	III	15100	(67100)	05	**4C14DB**	1117	(a)
			2.00	III	14600	(64900)				2.41	III	15100	(67100)	05	**4C16DA**	1117	(a)
			2.78	III	21300	(94800)				3.35	III	21600	(95900)	05	**4D16DA**	1117	(a)
1.10	26900	(3040)	1.02	I	13900	(61900)	1.33	22300	(2520)	1.02	I	14700	(65200)	05	**4C14DA**	1320	C.F.
			1.53	II	13900	(61900)				1.85	II	14700	(65200)	05	**4C14DB**	1320	(a)
			1.69	II	13900	(61900)				2.04	III	14700	(65200)	05	**4C16DA**	1320	(a)
			2.35	III	21000	(93400)				2.84	III	21300	(95000)	05	**4D16DA**	1320	(a)
			2.87	III	21000	(93400)				3.46	III	21300	(95000)	05	**4D17DA**	1320	(a)
0.876	33800	(3820)	1.02	I	12500	(55500)	1.06	28000	(3160)	1.02	I	13700	(61100)	05	**4C14DA**	1656	C.F.
			1.22	I	12500	(55500)				1.47	II	13700	(61100)	05	**4C14DB**	1656	(a)
			1.35	I	12500	(55500)				1.63	II	13700	(61100)	05	**4C16DA**	1656	(a)
			1.87	II	20300	(90400)				2.26	III	20900	(92900)	05	**4D16DA**	1656	(a)
			2.28	III	20300	(90400)				2.76	III	20900	(92900)	05	**4D17DA**	1656	(a)
			2.81	III	22100	(98300)				3.39	III	22400	(99600)	05	**4E17DA**	1656	(a)

Notes: [1] For Y4 Double Reductions (4XXXDX) refer to the above table; for Y4 single reduction refer to tables on pages 2.91-2.130.

[2] Variable Frequency Drive (VFD) notes (see page 2.8 for Constant Torque Speed Ranges):
C.F. = Consult Factory with ambient temperature data for VFD operation.
(a) = Both AV and non-AV motors can be used for selection.

Standard Mounting Selection Tables

1/2 HP (0.4 kW)

Standard Mounting Positions:

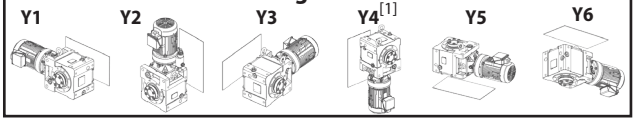

Dimension Pages:

Single Reduction	2.132-2.143
Single Reduction,Y2	2.144
Double Reduction	2.146-2.161
Double Reduction, Y2	2.162

Frequency	50 Hz	60 Hz
Input Speed	1450 RPM	1750 RPM
Number of Poles	4	

50Hz							60 Hz							Selection			
Output Speed (RPM)	Output Torque		Service Factor		Solid Shaft Overhung Load		Output Speed (RPM)	Output Torque		Service Factor		Solid Shaft Overhung Load		Base			VFD[2]
	in•lbs	(N•m)	SF	AGMA Class	lbs	(N)		in•lbs	(N•m)	SF	AGMA Class	lbs	(N)	Motor Power Code	Frame Size	Ratio	
0.741	39900	(4510)	1.03	I	10700	(47500)	0.894	33100	(3740)	1.25	I	12600	(56200)	05	**4C14DB**	1957	(a)
			1.14	I	10700	(47500)				1.38	I	12600	(56200)	05	**4C16DA**	1957	(a)
			1.58	II	19600	(87000)				1.91	II	20400	(90700)	05	**4D16DA**	1957	(a)
			1.93	II	19600	(87000)				2.33	III	20400	(90700)	05	**4D17DA**	1957	(a)
			2.38	III	21800	(96900)				2.87	III	22100	(98400)	05	**4E17DA**	1957	(a)
			2.57	III	21800	(96900)				3.10	III	22100	(98400)	05	**4E18DA**	1957	(-)
0.638	46300	(5240)	0.89	-	7920	(35200)	0.770	38400	(4340)	1.07	I	11200	(49700)	05	**4C14DB**	2272	(a)
			0.98	-	7920	(35200)				1.18	I	11200	(49700)	05	**4C16DA**	2272	(a)
			1.36	I	18600	(82600)				1.65	II	19800	(87900)	05	**4D16DA**	2272	(a)
			1.67	II	18600	(82600)				2.01	III	19800	(87900)	05	**4D17DA**	2272	(a)
			2.05	III	21500	(95400)				2.47	III	21900	(97200)	05	**4E17DA**	2272	(a)
			2.22	III	21500	(95400)				2.67	III	21900	(97200)	05	**4E18DA**	2272	(-)
0.567	52200	(5900)	0.87	-	3100	(13800)	0.684	43300	(4890)	1.05	I	9390	(41800)	05	**4C16DA**	2559	(a)
			1.21	I	17500	(77900)				1.46	II	19100	(84800)	05	**4D16DA**	2559	(a)
			1.48	II	17500	(77900)				1.78	II	19100	(84800)	05	**4D17DA**	2559	(a)
			1.82	II	21200	(94100)				2.19	III	21600	(96100)	05	**4E17DA**	2559	(a)
			1.97	II	21200	(94100)				2.37	III	21600	(96100)	05	**4E18DA**	2559	(a)
			2.88	III	29900	(133000)				3.48	III	30300	(135000)	05	**4F18DA**	2559	(a)
			2.95	III	29900	(133000)				3.56	III	30300	(135000)	05	**4F19DA**	2559	(a)
0.493	60100	(6790)	1.05	I	15700	(70000)	0.595	49800	(5620)	1.27	I	18000	(80000)	05	**4D16DA**	2944	(a)
			1.29	I	15700	(70000)				1.55	II	18000	(80000)	05	**4D17DA**	2944	(a)
			1.58	II	20800	(92400)				1.91	II	21300	(94700)	05	**4E17DA**	2944	(a)
			1.71	II	20800	(92400)				2.06	III	21300	(94700)	05	**4E18DA**	2944	(a)
			2.56	III	29600	(132000)				3.09	III	30000	(134000)	05	**4F19DA**	2944	(-)
0.413	71600	(8090)	0.88	-	12100	(53600)	0.499	59300	(6710)	1.07	I	15900	(70800)	05	**4D16DA**	3511	(a)
			1.08	I	12100	(53600)				1.30	I	15900	(70800)	05	**4D17DA**	3511	(a)
			1.32	I	20200	(89700)				1.60	II	20800	(92500)	05	**4E17DA**	3511	(a)
			2.10	III	29100	(129000)				2.54	III	29600	(132000)	05	**4F18DA**	3511	(a)
			2.15	III	29100	(129000)				2.60	III	29600	(132000)	05	**4F19DA**	3511	(a)
0.332	89000	(10100)	1.07	I	19300	(85800)	0.401	73800	(8340)	1.29	I	20100	(89300)	05	**4E17DA**	4365	(a)
			1.69	II	28300	(126000)				2.04	III	29000	(129000)	05	**4F18DA**	4365	(a)
			1.73	II	28300	(126000)				2.09	III	29000	(129000)	05	**4F19DA**	4365	(-)
0.280	106000	(11900)	0.90	-	16100	(71600)	0.338	87500	(9890)	1.08	I	19400	(86200)	05	**4E17DA**	5177	(a)

Notes: [1] For Y4 Double Reductions (4XXXDX) refer to the above table; for Y4 single reduction refer to tables on pages 2.91-2.130.

[2] Variable Frequency Drive (VFD) notes (see page 2.8 for Constant Torque Speed Ranges):
(-) = For Inverter Operation, starting condition may require ambient temperature of 5° C or higher.
(a) = Both AV and non-AV motors can be used for selection.

Standard Mounting Selection Tables

3/4 HP (0.55 kW)

Standard Mounting Positions:

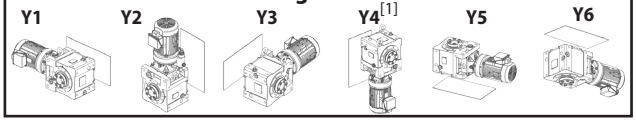

Dimension Pages:

Single Reduction	2.132-2.143
Single Reduction,Y2	2.144
Double Reduction	2.146-2.161
Double Reduction, Y2	2.162

Frequency	50 Hz	60 Hz
Input Speed	1450 RPM	1750 RPM
Number of Poles	4	

50Hz							60 Hz							Selection			
Output Speed (RPM)	Output Torque		Service Factor		Solid Shaft Overhung Load		Output Speed (RPM)	Output Torque		Service Factor		Solid Shaft Overhung Load		Base			VFD[2]
	in•lbs	*(N•m)*	SF	AGMA Class	lbs	*(N)*		in•lbs	*(N•m)*	SF	AGMA Class	lbs	*(N)*	Motor Power Code	Frame Size	Ratio	
18.1	2360	*(267)*	2.31	III	6050	*(26900)*	21.9	1960	*(221)*	2.31	III	6080	*(27100)*	08	**4A100**	80	(a)
16.6	2590	*(292)*	2.31	III	6030	*(26800)*	20.0	2140	*(242)*	2.31	III	6070	*(27000)*	08	**4A100**	88	(a)
14.3	3000	*(339)*	2.20	III	5990	*(26700)*	17.2	2490	*(281)*	2.20	III	6040	*(26900)*	08	**4A100**	102	(a)
			2.89	III	5990	*(26700)*				2.89	III	6040	*(26900)*	08	**4A105**	102	(a)
12.9	3310	*(374)*	1.77	II	5960	*(26500)*	15.6	2740	*(310)*	1.77	II	6020	*(26800)*	08	**4A100**	112	(a)
			2.18	III	5960	*(26500)*				2.18	III	6020	*(26800)*	08	**4A105**	112	(a)
			2.73	III	5960	*(26500)*				2.73	III	6020	*(26800)*	08	**4A110**	112	(a)
11.8	3620	*(409)*	1.77	II	5920	*(26300)*	14.3	3000	*(339)*	1.77	II	5990	*(26700)*	08	**4A100**	123	(a)
			2.18	III	5920	*(26300)*				2.18	III	5990	*(26700)*	08	**4A105**	123	(a)
			2.73	III	5920	*(26300)*				2.73	III	5990	*(26700)*	08	**4A110**	123	(a)
9.63	4450	*(503)*	1.42	II	5800	*(25800)*	11.6	3690	*(416)*	1.42	II	5910	*(26300)*	08	**4A100**	151	(a)
			1.96	II	5800	*(25800)*				1.96	II	5910	*(26300)*	08	**4A105**	151	(a)
			2.36	III	5800	*(25800)*				2.36	III	5910	*(26300)*	08	**4A110**	151	(a)
			2.57	III	5800	*(25800)*				2.57	III	5910	*(26300)*	08	**4A115**	151	(a)
8.12	5280	*(596)*	1.02	I	5640	*(25100)*	9.80	4370	*(494)*	1.02	I	5810	*(25800)*	08	**4A100**	179	(a)
			1.41	II	5640	*(25100)*				1.41	II	5810	*(25800)*	08	**4A105**	179	(a)
			1.72	II	5640	*(25100)*				1.72	II	5810	*(25800)*	08	**4A110**	179	(a)
			2.02	III	5640	*(25100)*				2.02	III	5810	*(25800)*	08	**4A115**	179	(a)
			2.16	III	5640	*(25100)*				2.16	III	5810	*(25800)*	08	**4A120**	179	(a)
			2.96	III	9860	*(43900)*				3.13	III	9920	*(44100)*	08	**4B120**	179	(a)
7.02	6100	*(690)*	1.24	I	5460	*(24300)*	8.47	5060	*(571)*	1.29	I	5690	*(25300)*	08	**4A105**	207	(a)
			1.56	II	5460	*(24300)*				1.56	II	5690	*(25300)*	08	**4A110**	207	(a)
			1.84	II	5460	*(24300)*				1.84	II	5690	*(25300)*	08	**4A115**	207	(a)
			1.87	II	5460	*(24300)*				1.87	II	5690	*(25300)*	08	**4A120**	207	(a)
			2.36	III	9800	*(43600)*				2.36	III	9880	*(43900)*	08	**4B120**	207	(a)
			2.95	III	9800	*(43600)*				2.95	III	9880	*(43900)*	08	**4B125**	207	(a)
5.84	7350	*(830)*	0.92	-	5120	*(22800)*	7.04	6090	*(688)*	1.02	I	5470	*(24300)*	08	**4A105**	249	(a)
			1.22	I	5120	*(22800)*				1.22	I	5470	*(24300)*	08	**4A110**	249	(a)
			1.38	I	5120	*(22800)*				1.38	I	5470	*(24300)*	08	**4A115**	249	(a)
			1.55	II	5120	*(22800)*				1.55	II	5470	*(24300)*	08	**4A120**	249	(a)
			1.74	II	9690	*(43100)*				1.74	II	9800	*(43600)*	08	**4B120**	249	(a)
			2.07	III	9690	*(43100)*				2.18	III	9800	*(43600)*	08	**4B125**	249	(a)
4.76	9000	*(1020)*	0.91	-	4520	*(20100)*	5.75	7460	*(843)*	1.03	I	5090	*(22600)*	08	**4A105**	305	(a)
			1.20	I	4520	*(20100)*				1.20	I	5090	*(22600)*	08	**4A110**	305	(a)
			1.27	I	4520	*(20100)*				1.27	I	5090	*(22600)*	08	**4A115**	305	(a)
			1.72	II	9500	*(42300)*				1.72	II	9680	*(43000)*	08	**4B120**	305	(a)
			1.87	II	9500	*(42300)*				2.05	III	9680	*(43000)*	08	**4B125**	305	(a)
			2.53	III	9500	*(42300)*				2.53	III	9680	*(43000)*	08	**4B140**	305	(a)

Notes: [1] For Y4 Double Reductions (4XXXDX) refer to the above table; for Y4 single reduction refer to tables on pages 2.91-2.130.
[2] Variable Frequency Drive (VFD) notes (see page 2.8 for Constant Torque Speed Ranges):
(a) = Both AV and non-AV motors can be used for selection.

Standard Mounting Selection Tables

3/4 HP (0.55 kW)

Standard Mounting Positions:

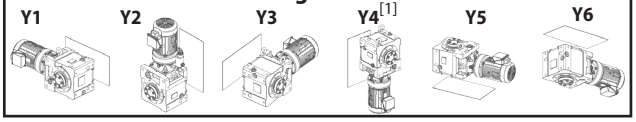

Dimension Pages:

Single Reduction	2.132-2.143
Single Reduction,Y2	2.144
Double Reduction	2.146-2.161
Double Reduction, Y2	2.162

Frequency	50 Hz	60 Hz
Input Speed	1450 RPM	1750 RPM
Number of Poles	4	

50Hz							60 Hz							Selection			
Output Speed (RPM)	Output Torque		Service Factor		Solid Shaft Overhung Load		Output Speed (RPM)	Output Torque		Service Factor		Solid Shaft Overhung Load		Base			VFD[2]
	in•lbs	*(N•m)*	SF	AGMA Class	lbs	*(N)*		in•lbs	*(N•m)*	SF	AGMA Class	lbs	*(N)*	Motor Power Code	Frame Size	Ratio	
3.98	10200	*(1150)*	1.12	I	3590	*(16000)*	4.81	8460	*(956)*	1.35	I	4550	*(20300)*	08	**4A12DB**	364	(a)
			1.86	II	9260	*(41200)*				2.24	III	9510	*(42300)*	08	**4B12DB**	364	(a)
			2.23	III	9260	*(41200)*				2.69	III	9510	*(42300)*	08	**4B14DB**	364	(a)
			2.75	III	15800	*(70500)*				2.75	III	15900	*(70900)*	08	**4C14DB**	364	(a)
3.42	11900	*(1340)*	0.96	-	2030	*(9010)*	4.13	9840	*(1110)*	1.16	I	3830	*(17000)*	08	**4A12DB**	424	(a)
			1.58	II	8960	*(39900)*				1.90	II	9310	*(41400)*	08	**4B12DB**	424	(a)
			1.91	II	8960	*(39900)*				2.31	III	9310	*(41400)*	08	**4B14DB**	424	(a)
			2.75	III	15700	*(70000)*				2.75	III	15900	*(70600)*	08	**4C14DB**	424	(a)
2.90	14000	*(1590)*	1.35	I	8490	*(37800)*	3.50	11600	*(1310)*	1.63	II	9010	*(40100)*	08	**4B12DB**	501	(a)
			1.62	II	8490	*(37800)*				1.96	II	9010	*(40100)*	08	**4B14DB**	501	(a)
			2.75	III	15600	*(69300)*				2.75	III	15800	*(70100)*	08	**4C14DB**	501	(a)
			2.94	III	15600	*(69300)*				3.55	III	15800	*(70100)*	08	**4C14DC**	501	(-)
2.51	16200	*(1830)*	1.17	I	7910	*(35200)*	3.03	13400	*(1520)*	1.41	II	8640	*(38400)*	08	**4B12DB**	578	(a)
			1.40	II	7910	*(35200)*				1.69	II	8640	*(38400)*	08	**4B14DB**	578	(a)
			2.52	III	15400	*(68400)*				2.75	III	15600	*(69500)*	08	**4C14DB**	578	(a)
			2.81	III	15400	*(68400)*				3.39	III	15600	*(69500)*	08	**4C16DC**	578	(-)
2.12	19100	*(2160)*	0.99	-	6880	*(30600)*	2.56	15900	*(1790)*	1.20	I	8010	*(35600)*	08	**4B12DB**	683	(a)
			1.19	I	6880	*(30600)*				1.43	II	8010	*(35600)*	08	**4B14DB**	683	(a)
			2.14	III	15100	*(67000)*				2.58	III	15400	*(68500)*	08	**4C14DB**	683	(a)
			2.38	III	15100	*(67000)*				2.75	III	15400	*(68500)*	08	**4C16DA**	683	(a)
1.79	22700	*(2560)*	0.84	-	5060	*(22500)*	2.16	18800	*(2120)*	1.01	I	7020	*(31200)*	08	**4B12DB**	809	(a)
			1.00	I	5060	*(22500)*				1.21	I	7020	*(31200)*	08	**4B14DB**	809	(a)
			1.78	II	14600	*(64900)*				2.14	III	15100	*(67200)*	08	**4C14DB**	809	(a)
			2.01	III	14600	*(64900)*				2.42	III	15100	*(67200)*	08	**4C16DA**	809	(a)
			2.79	III	21300	*(94800)*				3.37	III	21600	*(96000)*	08	**4D16DB**	809	(-)
1.52	26800	*(3030)*	1.50	II	13900	*(62000)*	1.83	22200	*(2510)*	1.81	II	14700	*(65200)*	08	**4C14DB**	956	(a)
			1.70	II	13900	*(62000)*				2.05	III	14700	*(65200)*	08	**4C16DA**	956	(a)
			2.36	III	21000	*(93400)*				2.75	III	21400	*(95000)*	08	**4D16DA**	956	(a)
			2.88	III	21000	*(93400)*				3.47	III	21400	*(95000)*	08	**4D17DC**	956	(a)
1.30	31300	*(3540)*	1.32	I	13000	*(58000)*	1.57	26000	*(2930)*	1.59	II	14100	*(62700)*	08	**4C14DB**	1117	(a)
			1.45	II	13000	*(58000)*				1.75	II	14100	*(62700)*	08	**4C16DA**	1117	(a)
			2.02	III	20600	*(91500)*				2.44	III	21100	*(93700)*	08	**4D16DA**	1117	(a)
			2.46	III	20600	*(91500)*				2.75	III	21100	*(93700)*	08	**4D17DA**	1117	(a)

Notes: [1] For Y4 Double Reductions (4XXXDX) refer to the above table; for Y4 single reduction refer to tables on pages 2.91-2.130.
[2] Variable Frequency Drive (VFD) notes (see page 2.8 for Constant Torque Speed Ranges):
(a) = Both AV and non-AV motors can be used for selection.

Standard Mounting Selection Tables

3/4 HP (0.55 kW)

Standard Mounting Positions:

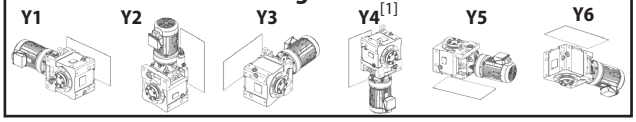

Dimension Pages:

Single Reduction	2.132-2.143
Single Reduction,Y2	2.144
Double Reduction	2.146-2.161
Double Reduction, Y2	2.162

Frequency	50 Hz	60 Hz
Input Speed	1450 RPM	1750 RPM
Number of Poles	4	

50Hz							60 Hz							Selection			
Output Speed (RPM)	Output Torque		Service Factor		Solid Shaft Overhung Load		Output Speed (RPM)	Output Torque		Service Factor		Solid Shaft Overhung Load		Base			VFD[2]
	in•lbs	(N•m)	SF	AGMA Class	lbs	(N)		in•lbs	(N•m)	SF	AGMA Class	lbs	(N)	Motor Power Code	Frame Size	Ratio	
1.10	37000	(4180)	1.11	I	11600	(51600)	1.33	30700	(3470)	1.35	I	13200	(58700)	08	**4C14DB**	1320	(a)
			1.23	I	11600	(51600)				1.48	II	13200	(58700)	08	**4C16DA**	1320	(a)
			1.71	II	19900	(88700)				2.06	III	20600	(91800)	08	**4D16DA**	1320	(a)
			2.08	III	19900	(88700)				2.52	III	20600	(91800)	08	**4D17DA**	1320	(a)
			2.56	III	21900	(97500)				2.75	III	22300	(99000)	08	**4E17DA**	1320	(a)
			2.77	III	21900	(97500)				3.35	III	22300	(99000)	08	**4E18DA**	1320	(a)
0.876	46400	(5250)	0.89	-	7870	(35000)	1.06	38500	(4350)	1.07	I	11100	(49600)	08	**4C14DB**	1656	(a)
			0.98	-	7870	(35000)				1.18	I	11100	(49600)	08	**4C16DA**	1656	(a)
			1.36	I	18600	(82600)				1.64	II	19700	(87800)	08	**4D16DA**	1656	(a)
			1.66	II	18600	(82600)				2.01	III	19700	(87800)	08	**4D17DA**	1656	(a)
			2.04	III	21500	(95400)				2.47	III	21900	(97200)	08	**4E17DA**	1656	(a)
			2.21	III	21500	(95400)				2.67	III	21900	(97200)	08	**4E18DA**	1656	(-)
0.741	54900	(6200)	1.15	I	16900	(75400)	0.894	45500	(5140)	1.39	I	18700	(83300)	08	**4D16DA**	1957	(a)
			1.41	II	16900	(75400)				1.70	II	18700	(83300)	08	**4D17DA**	1957	(a)
			1.73	II	21000	(93500)				2.09	III	21500	(95600)	08	**4E17DA**	1957	(a)
			1.87	II	21000	(93500)				2.26	III	21500	(95600)	08	**4E18DA**	1957	(a)
			2.74	III	29800	(133000)				3.31	III	30200	(134000)	08	**4F18DA**	1957	(a)
			2.81	III	29800	(133000)				3.39	III	30200	(134000)	08	**4F19DA**	1957	(a)
0.638	63700	(7200)	0.99	-	14700	(65500)	0.770	52800	(5970)	1.20	I	17400	(77300)	08	**4D16DA**	2272	(a)
			1.21	I	14700	(65500)				1.46	II	17400	(77300)	08	**4D17DA**	2272	(a)
			1.49	II	20600	(91500)				1.80	II	21100	(94000)	08	**4E17DA**	2272	(a)
			1.61	II	20600	(91500)				1.94	II	21100	(94000)	08	**4E18DA**	2272	(-)
			2.36	III	29400	(131000)				2.85	III	29900	(133000)	08	**4F18DA**	2272	(-)
			2.42	III	29400	(131000)				2.92	III	29900	(133000)	08	**4F19DA**	2272	(-)
0.567	71800	(8110)	0.88	-	12000	(53300)	0.684	59500	(6720)	1.06	I	15900	(70600)	08	**4D16DA**	2559	(a)
			1.08	I	12000	(53300)				1.30	I	15900	(70600)	08	**4D17DA**	2559	(a)
			1.32	I	20200	(89700)				1.60	II	20800	(92500)	08	**4E17DA**	2559	(a)
			1.43	II	20200	(89700)				1.73	II	20800	(92500)	08	**4E18DA**	2559	(a)
			2.10	III	29100	(129000)				2.53	III	29600	(132000)	08	**4F18DA**	2559	(a)
			2.15	III	29100	(129000)				2.59	III	29600	(132000)	08	**4F19DA**	2559	(a)
0.493	82600	(9330)	0.93	-	5670	(25200)	0.595	68400	(7730)	1.13	I	13200	(58900)	08	**4D17DA**	2944	(a)
			1.15	I	19600	(87300)				1.39	I	20300	(90500)	08	**4E17DA**	2944	(a)
			1.24	I	19600	(87300)				1.50	II	20300	(90500)	08	**4E18DA**	2944	(a)
			1.82	II	28600	(127000)				2.20	III	29200	(130000)	08	**4F18DA**	2944	(a)
			1.87	II	28600	(127000)				2.25	III	29200	(130000)	08	**4F19DA**	2944	(a)
0.413	98500	(11100)	0.96	-	18200	(80800)	0.499	81600	(9220)	1.16	I	19700	(87500)	08	**4E17DA**	3511	(a)
			1.53	II	27900	(124000)				1.85	II	28600	(127000)	08	**4F18DA**	3511	(a)
			1.56	II	27900	(124000)				1.89	II	28600	(127000)	08	**4F19DA**	3511	(a)

Notes: [1] For Y4 Double Reductions (4XXXDX) refer to the above table; for Y4 single reduction refer to tables on pages 2.91-2.130.
[2] Variable Frequency Drive (VFD) notes (see page 2.8 for Constant Torque Speed Ranges):
(a) = Both AV and non-AV motors can be used for selection.

Standard Mounting Selection Tables

3/4 HP (0.55 kW)

Standard Mounting Positions:

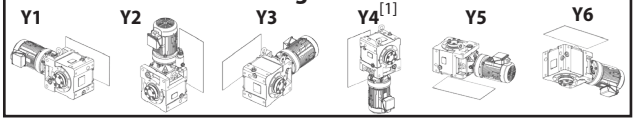

Dimension Pages:

Single Reduction	2.132-2.143
Single Reduction,Y2	2.144
Double Reduction	2.146-2.161
Double Reduction, Y2	2.162

Frequency	50 Hz	60 Hz
Input Speed	1450 RPM	1750 RPM
Number of Poles	4	

50Hz						60 Hz						Selection			
Output Speed (RPM)	Output Torque		Service Factor		Solid Shaft Overhung Load		Output Speed (RPM)	Output Torque		Service Factor		Solid Shaft Overhung Load		Base			VFD[2]
	in•lbs	*(N•m)*	SF	AGMA Class	lbs	*(N)*		in•lbs	*(N•m)*	SF	AGMA Class	lbs	*(N)*	Motor Power Code	Frame Size	Ratio	
0.332	122000	*(13800)*	1.23	I	26900	*(120000)*	0.401	101000	*(11500)*	1.48	II	27800	*(124000)*	08	**4F18DA**	4365	(a)
			1.26	I	26900	*(120000)*				1.52	II	27800	*(124000)*	08	**4F19DA**	4365	(a)

Notes: [1] For Y4 Double Reductions (4XXXDX) refer to the above table; for Y4 single reduction refer to tables on pages 2.91-2.130.
[2] Variable Frequency Drive (VFD) notes (see page 2.8 for Constant Torque Speed Ranges):
(a) = Both AV and non-AV motors can be used for selection.

Standard Mounting Selection Tables

1 HP (0.75 kW)

Standard Mounting Positions:

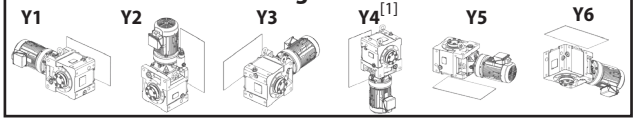

Dimension Pages:

Single Reduction	2.132-2.143
Single Reduction,Y2	2.144
Double Reduction	2.146-2.161
Double Reduction, Y2	2.162

Frequency	50 Hz	60 Hz
Input Speed	1450 RPM	1750 RPM
Number of Poles	4	

50Hz							60 Hz							Selection			
Output Speed (RPM)	Output Torque		Service Factor		Solid Shaft Overhung Load		Output Speed (RPM)	Output Torque		Service Factor		Solid Shaft Overhung Load		Base			VFD[2]
	in•lbs	*(N•m)*	SF	AGMA Class	lbs	*(N)*		in•lbs	*(N•m)*	SF	AGMA Class	lbs	*(N)*	Motor Power Code	Frame Size	Ratio	
24.4	2400	*(271)*	2.65	III	6050	*(26900)*	29.4	1990	*(225)*	2.65	III	6080	*(27100)*	1	**4A100**	60	
21.6	2710	*(306)*	2.54	III	6020	*(26800)*	26.0	2240	*(254)*	2.57	III	6060	*(27000)*	1	**4A100**	67	
19.7	2960	*(335)*	2.54	III	6000	*(26700)*	23.8	2450	*(277)*	2.57	III	6050	*(26900)*	1	**4A100**	74	
18.1	3220	*(364)*	1.69	II	5970	*(26500)*	21.9	2670	*(302)*	1.69	II	6030	*(26800)*	1	**4A100**	80	
			2.23	III	5970	*(26500)*				2.23	III	6030	*(26800)*	1	**4A105**	80	
			2.55	III	5970	*(26500)*				2.55	III	6030	*(26800)*	1	**4A110**	80	
			2.96	III	5970	*(26500)*				2.96	III	6030	*(26800)*	1	**4A115**	80	
16.6	3530	*(399)*	1.69	II	5930	*(26400)*	20.0	2920	*(330)*	1.69	II	6000	*(26700)*	1	**4A100**	88	
			2.23	III	5930	*(26400)*				2.23	III	6000	*(26700)*	1	**4A105**	88	
			2.55	III	5930	*(26400)*				2.55	III	6000	*(26700)*	1	**4A110**	88	
			2.96	III	5930	*(26400)*				2.96	III	6000	*(26700)*	1	**4A115**	88	
14.3	4090	*(462)*	1.61	II	5850	*(26000)*	17.2	3390	*(383)*	1.61	II	5950	*(26500)*	1	**4A100**	102	
			2.12	III	5850	*(26000)*				2.12	III	5950	*(26500)*	1	**4A105**	102	
			2.53	III	5850	*(26000)*				2.53	III	5950	*(26500)*	1	**4A110**	102	
			2.79	III	5850	*(26000)*				2.79	III	5950	*(26500)*	1	**4A115**	102	
12.9	4510	*(510)*	1.30	I	5780	*(25700)*	15.6	3740	*(423)*	1.30	I	5900	*(26300)*	1	**4A100**	112	
			1.60	II	5780	*(25700)*				1.60	II	5900	*(26300)*	1	**4A105**	112	
			2.00	III	5780	*(25700)*				2.00	III	5900	*(26300)*	1	**4A110**	112	
			2.41	III	5780	*(25700)*				2.41	III	5900	*(26300)*	1	**4A115**	112	
			2.53	III	5780	*(25700)*				2.53	III	5900	*(26300)*	1	**4A120**	112	
11.8	4940	*(558)*	1.30	I	5710	*(25400)*	14.3	4090	*(462)*	1.30	I	5850	*(26000)*	1	**4A100**	123	
			1.60	II	5710	*(25400)*				1.60	II	5850	*(26000)*	1	**4A105**	123	
			2.00	III	5710	*(25400)*				2.00	III	5850	*(26000)*	1	**4A110**	123	
			2.31	III	5710	*(25400)*				2.31	III	5850	*(26000)*	1	**4A115**	123	
9.63	6070	*(685)*	1.04	I	5470	*(24300)*	11.6	5030	*(568)*	1.04	I	5690	*(25300)*	1	**4A100**	151	
			1.44	II	5470	*(24300)*				1.44	II	5690	*(25300)*	1	**4A105**	151	
			1.88	II	5470	*(24300)*				1.88	II	5690	*(25300)*	1	**4A115**	151	
			2.55	III	9800	*(43600)*				2.55	III	9880	*(44000)*	1	**4B120**	151	
8.12	7200	*(813)*	1.03	I	5170	*(23000)*	9.80	5960	*(674)*	1.03	I	5490	*(24400)*	1	**4A105**	179	
			1.26	I	5170	*(23000)*				1.26	I	5490	*(24400)*	1	**4A110**	179	
			1.48	II	5170	*(23000)*				1.48	II	5490	*(24400)*	1	**4A115**	179	
			1.59	II	5170	*(23000)*				1.59	II	5490	*(24400)*	1	**4A120**	179	
			2.17	III	9700	*(43200)*				2.29	III	9810	*(43600)*	1	**4B120**	179	
			2.63	III	9700	*(43200)*				3.04	III	9810	*(43600)*	1	**4B125**	179	

Notes: [1] For Y4 Double Reductions (4XXXDX) refer to the above table; for Y4 single reduction refer to tables on pages 2.91-2.130..
[2] Variable Frequency Drive (VFD) notes (see page 2.8 for Constant Torque Speed Ranges):
All 1HP+ motors require EP suffix in model number and can be used with a VFD, unless noted.

Standard Mounting Selection Tables

1 HP (0.75 kW)

Standard Mounting Positions:

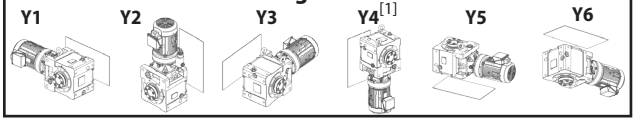

Dimension Pages:

Single Reduction	2.132-2.143
Single Reduction,Y2	2.144
Double Reduction	2.146-2.161
Double Reduction, Y2	2.162

Frequency	50 Hz	60 Hz
Input Speed	1450 RPM	1750 RPM
Number of Poles	4	

50Hz							60 Hz						Selection			
Output Speed (RPM)	Output Torque		Service Factor		Solid Shaft Overhung Load		Output Speed (RPM)	Output Torque		Service Factor		Solid Shaft Overhung Load		Base			VFD[2]
	in•lbs	*(N•m)*	SF	AGMA Class	lbs	*(N)*		in•lbs	*(N•m)*	SF	AGMA Class	lbs	*(N)*	Motor Power Code	Frame Size	Ratio	
7.02	8320	*(940)*	0.91	-	4790	*(21300)*	8.47	6900	*(779)*	0.94	-	5250	*(23400)*	1	**4A105**	207	
			1.15	I	4790	*(21300)*				1.15	I	5250	*(23400)*	1	**4A110**	207	
			1.35	I	4790	*(21300)*				1.35	I	5250	*(23400)*	1	**4A115**	207	
			1.73	II	9580	*(42600)*				1.73	II	9730	*(43300)*	1	**4B120**	207	
			2.16	III	9580	*(42600)*				2.16	III	9730	*(43300)*	1	**4B125**	207	
			2.73	III	9580	*(42600)*				2.73	III	9730	*(43300)*	1	**4B140**	207	
5.84	10000	*(1130)*	1.01	I	4030	*(17900)*	7.04	8300	*(938)*	1.01	I	4800	*(21300)*	1	**4A115**	249	
			1.14	I	4030	*(17900)*				1.14	I	4800	*(21300)*	1	**4A120**	249	
			1.28	I	9370	*(41700)*				1.28	I	9590	*(42600)*	1	**4B120**	249	
			1.52	II	9370	*(41700)*				1.60	II	9590	*(42600)*	1	**4B125**	249	
			2.27	III	9370	*(41700)*				2.27	III	9590	*(42600)*	1	**4B145**	249	
4.76	12300	*(1390)*	0.93	-	2330	*(10300)*	5.75	10200	*(1150)*	0.93	-	3950	*(17600)*	1	**4A115**	305	
			1.26	I	9000	*(40100)*				1.26	I	9340	*(41600)*	1	**4B120**	305	
			1.37	I	9000	*(40100)*				1.51	II	9340	*(41600)*	1	**4B125**	305	
			1.85	II	9000	*(40100)*				1.85	II	9340	*(41600)*	1	**4B145**	305	
			2.64	III	15700	*(70100)*				2.64	III	15900	*(70600)*	1	**4C140**	305	
3.98	13900	*(1570)*	1.36	I	8520	*(37900)*	4.81	11500	*(1300)*	1.64	II	9030	*(40100)*	1	**4B12DB**	364	
			1.63	II	8520	*(37900)*				1.97	II	9030	*(40100)*	1	**4B14DB**	364	
			2.02	III	15600	*(69300)*				2.02	III	15800	*(70100)*	1	**4C14DB**	364	
			2.96	III	15600	*(69300)*				3.58	III	15800	*(70100)*	1	**4C14DC**	364	
3.42	16200	*(1830)*	1.16	I	7910	*(35200)*	4.13	13400	*(1520)*	1.40	II	8640	*(38400)*	1	**4B12DB**	424	
			1.40	II	7910	*(35200)*				1.69	II	8640	*(38400)*	1	**4B14DB**	424	
			2.02	III	15400	*(68400)*				2.02	III	15600	*(69500)*	1	**4C14DB**	424	
			2.40	III	15400	*(68400)*				2.90	III	15600	*(69500)*	1	**4C14DC**	424	
			2.81	III	15400	*(68400)*				3.39	III	15600	*(69500)*	1	**4C16DB**	424	
2.90	19100	*(2160)*	0.99	-	6880	*(30600)*	3.50	15900	*(1790)*	1.20	I	8010	*(35600)*	1	**4B12DB**	501	
			1.19	I	6880	*(30600)*				1.43	II	8010	*(35600)*	1	**4B14DB**	501	
			2.02	III	15100	*(67000)*				2.02	III	15400	*(68500)*	1	**4C14DB**	501	
			2.38	III	15100	*(67000)*				2.87	III	15400	*(68500)*	1	**4C16DB**	501	
2.51	22100	*(2500)*	0.86	-	5430	*(24200)*	3.03	18300	*(2070)*	1.04	I	7200	*(32000)*	1	**4B12DB**	578	
			1.03	I	5430	*(24200)*				1.24	I	7200	*(32000)*	1	**4B14DB**	578	
			1.85	II	14700	*(65300)*				2.02	III	15200	*(67400)*	1	**4C14DB**	578	
			2.06	III	14700	*(65300)*				2.49	III	15200	*(67400)*	1	**4C16DB**	578	
			2.86	III	21400	*(95000)*				3.46	III	21600	*(96100)*	1	**4D16DB**	578	

Notes: [1] For Y4 Double Reductions (4XXXDX) refer to the above table; for Y4 single reduction refer to tables on pages 2.91-2.130.
[2] Variable Frequency Drive (VFD) notes (see page 2.8 for Constant Torque Speed Ranges):
All 1HP+ motors require EP suffix in model number and can be used with a VFD, unless noted.

Standard Mounting Selection Tables

1 HP (0.75 kW)

Standard Mounting Positions:

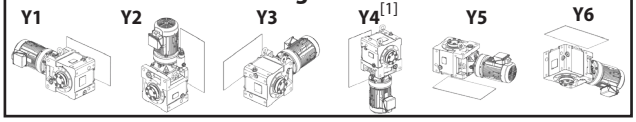

Dimension Pages:

Single Reduction	2.132-2.143
Single Reduction,Y2	2.144
Double Reduction	2.146-2.161
Double Reduction, Y2	2.162

Frequency	50 Hz	60 Hz
Input Speed	1450 RPM	1750 RPM
Number of Poles	4	

50Hz							60 Hz							Selection			
Output Speed (RPM)	Output Torque		Service Factor		Solid Shaft Overhung Load		Output Speed (RPM)	Output Torque		Service Factor		Solid Shaft Overhung Load		Base			VFD[2]
	in•lbs	*(N•m)*	SF	AGMA Class	lbs	*(N)*		in•lbs	*(N•m)*	SF	AGMA Class	lbs	*(N)*	Motor Power Code	Frame Size	Ratio	
2.12	26100	*(2950)*	0.87	-	1070	*(4750)*	2.56	21600	*(2440)*	1.05	I	5690	*(25300)*	1	**4B14DB**	683	
			1.57	II	14100	*(62600)*				1.89	II	14700	*(65600)*	1	**4C14DB**	683	
			1.74	II	14100	*(62600)*				2.02	III	14700	*(65600)*	1	**4C16DA**	683	
			2.02	III	21100	*(93700)*				2.02	III	21400	*(95200)*	1	**4D16DA**	683	
			2.42	III	21100	*(93700)*				2.92	III	21400	*(95200)*	1	**4D16DB**	683	
			2.96	III	21100	*(93700)*				3.57	III	21400	*(95200)*	1	**4D17DB**	683	
1.79	30900	*(3490)*	1.30	I	13100	*(58400)*	2.16	25600	*(2900)*	1.57	II	14100	*(62900)*	1	**4C14DB**	809	
			2.02	III	20600	*(91700)*				2.02	III	21100	*(93800)*	1	**4D16DA**	809	
			2.50	III	20600	*(91700)*				3.01	III	21100	*(93800)*	1	**4D17DB**	809	
1.52	36600	*(4130)*	1.10	I	11700	*(52200)*	1.83	30300	*(3420)*	1.33	I	13300	*(59000)*	1	**4C14DB**	956	
			1.24	I	11700	*(52200)*				1.50	II	13300	*(59000)*	1	**4C16DA**	956	
			1.73	II	20000	*(88900)*				2.02	III	20700	*(92000)*	1	**4D16DA**	956	
			2.02	III	22000	*(97700)*				2.02	III	22300	*(99100)*	1	**4E17DA**	956	
			2.60	III	22000	*(97700)*				3.13	III	22300	*(99100)*	1	**4E17DB**	956	
			2.81	III	22000	*(97700)*				3.39	III	22300	*(99100)*	1	**4E18DA**	956	
1.30	42700	*(4830)*	0.97	-	9620	*(42800)*	1.57	35400	*(4000)*	1.17	I	12100	*(53600)*	1	**4C14DB**	1117	
			1.07	I	9620	*(42800)*				1.29	I	12100	*(53600)*	1	**4C16DA**	1117	
			1.48	II	19200	*(85200)*				1.79	II	20100	*(89500)*	1	**4D16DA**	1117	
			1.81	II	19200	*(85200)*				2.02	III	20100	*(89500)*	1	**4D17DA**	1117	
			2.02	III	21600	*(96300)*				2.02	III	22000	*(97900)*	1	**4E17DA**	1117	
			2.22	III	21600	*(96300)*				2.68	III	22000	*(97900)*	1	**4E17DB**	1117	
			2.40	III	21600	*(96300)*				2.90	III	22000	*(97900)*	1	**4E18DA**	1117	
1.10	50500	*(5700)*	0.82	-	5090	*(22600)*	1.33	41800	*(4730)*	0.99	-	9970	*(44400)*	1	**4C14DB**	1320	
			1.25	I	17800	*(79400)*				1.51	II	19300	*(85800)*	1	**4D16DA**	1320	
			1.53	II	17800	*(79400)*				1.85	II	19300	*(85800)*	1	**4D17DA**	1320	
			1.88	II	21200	*(94500)*				2.02	III	21700	*(96500)*	1	**4E17DA**	1320	
			2.03	III	21200	*(94500)*				2.45	III	21700	*(96500)*	1	**4E18DA**	1320	
			2.98	III	30000	*(133000)*				3.60	III	30400	*(135000)*	1	**4F18DA**	1320	
0.876	63300	*(7160)*	1.00	I	14800	*(66000)*	1.06	52500	*(5930)*	1.21	I	17500	*(77600)*	1	**4D16DA**	1656	
			1.22	I	14800	*(66000)*				1.47	II	17500	*(77600)*	1	**4D17DA**	1656	
			1.50	II	20600	*(91600)*				1.81	II	21100	*(94100)*	1	**4E17DA**	1656	
			1.62	II	20600	*(91600)*				1.96	II	21100	*(94100)*	1	**4E18DA**	1656	
			2.38	III	29400	*(131000)*				2.87	III	29900	*(133000)*	1	**4F18DA**	1656	
			2.43	III	29400	*(131000)*				2.93	III	29900	*(133000)*	1	**4F19DA**	1656	

Notes: [1] For Y4 Double Reductions (4XXXDX) refer to the above table; for Y4 single reduction refer to tables on pages 2.91-2.130..
[2] Variable Frequency Drive (VFD) notes (see page 2.8 for Constant Torque Speed Ranges):
All 1HP+ motors require EP suffix in model number and can be used with a VFD, unless noted.

Standard Mounting Selection Tables

1 HP (0.75 kW)

Standard Mounting Positions:

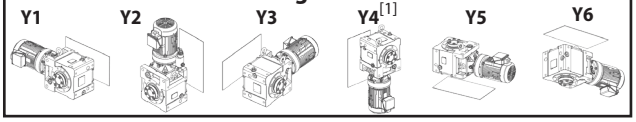

Dimension Pages:

Single Reduction	2.132-2.143
Single Reduction,Y2	2.144
Double Reduction	2.146-2.161
Double Reduction, Y2	2.162

Frequency	50 Hz	60 Hz
Input Speed	1450 RPM	1750 RPM
Number of Poles	4	

50Hz						60 Hz						Selection			
Output Speed (RPM)	Output Torque		Service Factor		Solid Shaft Overhung Load		Output Speed (RPM)	Output Torque		Service Factor		Solid Shaft Overhung Load		Base			VFD[2]
	in•lbs	(N•m)	SF	AGMA Class	lbs	(N)		in•lbs	(N•m)	SF	AGMA Class	lbs	(N)	Motor Power Code	Frame Size	Ratio	
0.741	74800	(8460)	0.85	-	10700	(47400)	0.894	62000	(7010)	1.02	I	15200	(67700)	1	**4D16DA**	1957	
			1.03	I	10700	(47400)				1.24	I	15200	(67700)	1	**4D17DA**	1957	
			1.27	I	20000	(89000)				1.53	II	20700	(91900)	1	**4E17DA**	1957	
			1.37	I	20000	(89000)				1.66	II	20700	(91900)	1	**4E18DA**	1957	
			2.01	III	28900	(129000)				2.43	III	29500	(131000)	1	**4F18DA**	1957	
			2.06	III	28900	(129000)				2.48	III	29500	(131000)	1	**4F19DA**	1957	
0.638	86900	(9820)	1.09	I	19400	(86300)	0.770	72000	(8130)	1.32	I	20200	(89700)	1	**4E17DA**	2272	
			1.18	I	19400	(86300)				1.43	II	20200	(89700)	1	**4E18DA**	2272	
			1.73	II	28400	(126000)				2.09	III	29100	(129000)	1	**4F18DA**	2272	
			1.77	II	28400	(126000)				2.14	III	29100	(129000)	1	**4F19DA**	2272	
0.567	97900	(11100)	0.97	-	18300	(81500)	0.684	81100	(9160)	1.17	I	19700	(87600)	1	**4E17DA**	2559	
			1.05	I	18300	(81500)				1.27	I	19700	(87600)	1	**4E18DA**	2559	
			1.54	II	27900	(124000)				1.86	II	28700	(127000)	1	**4F18DA**	2559	
			1.57	II	27900	(124000)				1.90	II	28700	(127000)	1	**4F19DA**	2559	
0.493	113000	(12700)	0.84	-	13600	(60500)	0.595	93300	(10500)	1.02	I	19100	(84900)	1	**4E17DA**	2944	
			0.91	-	13600	(60500)				1.10	I	19100	(84900)	1	**4E18DA**	2944	
			1.34	I	27300	(121000)				1.61	II	28100	(125000)	1	**4F18DA**	2944	
			1.37	I	27300	(121000)				1.65	II	28100	(125000)	1	**4F19DA**	2944	
0.413	134000	(15200)	1.12	I	26400	(117000)	0.499	111000	(12600)	1.35	I	27400	(122000)	1	**4F18DA**	3511	
			1.15	I	26400	(117000)				1.38	I	27400	(122000)	1	**4F19DA**	3511	
0.332	167000	(18900)	0.90	-	25000	(111000)	0.401	138000	(15600)	1.09	I	26200	(116000)	1	**4F18DA**	4365	
			0.92	-	25000	(111000)				1.11	I	26200	(116000)	1	**4F19DA**	4365	

Sold & Serviced By:
ELECTROMATE
Toll Free Phone (877) SERV098
www.electromate.com
sales@electromate.com

Notes: [1] For Y4 Double Reductions (4XXXDX) refer to the above table; for Y4 single reduction refer to tables on pages 2.91-2.130.
[2] Variable Frequency Drive (VFD) notes (see page 2.8 for Constant Torque Speed Ranges):
All 1HP+ motors require EP suffix in model number and can be used with a VFD, unless noted.

Standard Mounting Selection Tables

1.5 HP (1.1 kW)

Standard Mounting Positions:

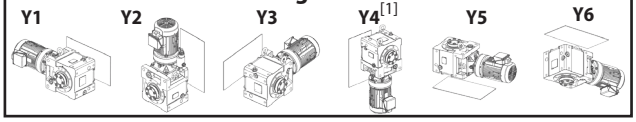

Dimension Pages:

Single Reduction	2.132-2.143
Single Reduction,Y2	2.144
Double Reduction	2.146-2.161
Double Reduction, Y2	2.162

Frequency	50 Hz	60 Hz
Input Speed	1450 RPM	1750 RPM
Number of Poles	4	

50Hz							60 Hz							Selection			
Output Speed (RPM)	Output Torque		Service Factor		Solid Shaft Overhung Load		Output Speed (RPM)	Output Torque		Service Factor		Solid Shaft Overhung Load		Base			VFD[2]
	in•lbs	*(N•m)*	SF	AGMA Class	lbs	*(N)*		in•lbs	*(N•m)*	SF	AGMA Class	lbs	*(N)*	Motor Power Code	Frame Size	Ratio	
138	621	*(70)*	2.13	III	4010	*(17800)*	167	514	*(58)*	2.13	III	3800	*(16900)*	1H	**4A100**	11	
			2.89	III	4010	*(17800)*				2.89	III	3800	*(16900)*	1H	**4A105**	11	
113	757	*(86)*	2.13	III	4240	*(18900)*	137	627	*(71)*	2.13	III	4020	*(17900)*	1H	**4A100**	13	
			2.89	III	4240	*(18900)*				2.89	III	4020	*(17900)*	1H	**4A105**	13	
104	828	*(94)*	2.13	III	4350	*(19400)*	125	686	*(78)*	2.13	III	4130	*(18400)*	1H	**4A100**	14	
			2.89	III	4350	*(19400)*				2.89	III	4130	*(18400)*	1H	**4A105**	14	
90.6	946	*(107)*	2.13	III	4520	*(20100)*	109	784	*(89)*	2.13	III	4280	*(19100)*	1H	**4A100**	16	
			2.89	III	4520	*(20100)*				2.89	III	4280	*(19100)*	1H	**4A105**	16	
82.9	1030	*(117)*	2.13	III	4630	*(20600)*	100.0	857	*(97)*	2.13	III	4390	*(19500)*	1H	**4A100**	18	
			2.89	III	4630	*(20600)*				2.89	III	4390	*(19500)*	1H	**4A105**	18	
69.0	1240	*(140)*	2.14	III	4870	*(21700)*	83.3	1030	*(116)*	2.14	III	4620	*(20600)*	1H	**4A100**	21	
			2.89	III	4870	*(21700)*				2.89	III	4620	*(20600)*	1H	**4A105**	21	
51.8	1660	*(187)*	2.14	III	5270	*(23400)*	62.5	1370	*(155)*	2.14	III	5010	*(22300)*	1H	**4A100**	28	
			2.89	III	5270	*(23400)*				2.89	III	5010	*(22300)*	1H	**4A105**	28	
41.2	2080	*(235)*	2.14	III	5600	*(24900)*	49.7	1720	*(195)*	2.14	III	5330	*(23700)*	1H	**4A100**	35	
			2.89	III	5600	*(24900)*				2.89	III	5330	*(23700)*	1H	**4A105**	35	
37.7	2280	*(257)*	2.14	III	5740	*(25500)*	45.5	1890	*(213)*	2.14	III	5460	*(24300)*	1H	**4A100**	39	
			2.89	III	5740	*(25500)*				2.89	III	5460	*(24300)*	1H	**4A105**	39	
31.9	2690	*(304)*	2.14	III	5990	*(26600)*	38.5	2230	*(252)*	2.14	III	5700	*(25400)*	1H	**4A100**	46	
			2.89	III	5990	*(26600)*				2.89	III	5700	*(25400)*	1H	**4A105**	46	
27.6	3100	*(351)*	2.14	III	5980	*(26600)*	33.3	2570	*(291)*	2.14	III	5920	*(26300)*	1H	**4A100**	53	
			2.89	III	5980	*(26600)*				2.89	III	5920	*(26300)*	1H	**4A105**	53	
24.4	3520	*(397)*	1.81	II	5930	*(26400)*	29.4	2910	*(329)*	1.81	II	6000	*(26700)*	1H	**4A100**	60	
			2.24	III	5930	*(26400)*				2.24	III	6000	*(26700)*	1H	**4A105**	60	
			2.89	III	5930	*(26400)*				2.89	III	6000	*(26700)*	1H	**4A110**	60	
21.6	3970	*(449)*	1.73	II	5870	*(26100)*	26.0	3290	*(372)*	1.75	II	5960	*(26500)*	1H	**4A100**	67	
			2.08	III	5870	*(26100)*				2.13	III	5960	*(26500)*	1H	**4A105**	67	
			2.47	III	5870	*(26100)*				2.47	III	5960	*(26500)*	1H	**4A110**	67	
			2.83	III	5870	*(26100)*				2.83	III	5960	*(26500)*	1H	**4A115**	67	
			2.87	III	5870	*(26100)*				2.87	III	5960	*(26500)*	1H	**4A120**	67	
19.7	4350	*(491)*	1.73	II	5810	*(25900)*	23.8	3600	*(407)*	1.75	II	5920	*(26300)*	1H	**4A100**	74	
			2.08	III	5810	*(25900)*				2.13	III	5920	*(26300)*	1H	**4A105**	74	
			2.47	III	5810	*(25900)*				2.47	III	5920	*(26300)*	1H	**4A110**	74	
			2.63	III	5810	*(25900)*				2.63	III	5920	*(26300)*	1H	**4A120**	74	

Notes: [1] For Y4 Double Reductions (4XXXDX) refer to the above table; for Y4 single reduction refer to tables on pages 2.91-2.130..
[2] Variable Frequency Drive (VFD) notes (see page 2.8 for Constant Torque Speed Ranges):
All 1HP+ motors require EP suffix in model number and can be used with a VFD, unless noted.

Standard Mounting Selection Tables

1.5 HP (1.1 kW)

Standard Mounting Positions:

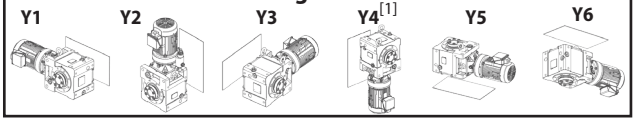

Dimension Pages:

Single Reduction	2.132-2.143
Single Reduction,Y2	2.144
Double Reduction	2.146-2.161
Double Reduction, Y2	2.162

Frequency	50 Hz	60 Hz
Input Speed	1450 RPM	1750 RPM
Number of Poles	4	

50Hz							60 Hz						Selection			
Output Speed (RPM)	Output Torque		Service Factor		Solid Shaft Overhung Load		Output Speed (RPM)	Output Torque		Service Factor		Solid Shaft Overhung Load		Base			VFD[2]
	in•lbs	*(N•m)*	SF	AGMA Class	lbs	*(N)*		in•lbs	*(N•m)*	SF	AGMA Class	lbs	*(N)*	Motor Power Code	Frame Size	Ratio	
18.1	4730	*(534)*	1.15	I	5750	*(25600)*	21.9	3920	*(443)*	1.15	I	5880	*(26100)*	1H	**4A100**	80	
			1.52	II	5750	*(25600)*				1.52	II	5880	*(26100)*	1H	**4A105**	80	
			1.74	II	5750	*(25600)*				1.74	II	5880	*(26100)*	1H	**4A110**	80	
			2.02	III	5750	*(25600)*				2.02	III	5880	*(26100)*	1H	**4A115**	80	
			2.41	III	5750	*(25600)*				2.41	III	5880	*(26100)*	1H	**4A120**	80	
			2.81	III	9650	*(42900)*				2.81	III	9180	*(40800)*	1H	**4B120**	80	
16.6	5170	*(584)*	1.15	I	5660	*(25200)*	20.0	4290	*(484)*	1.15	I	5820	*(25900)*	1H	**4A100**	88	
			1.52	II	5660	*(25200)*				1.52	II	5820	*(25900)*	1H	**4A105**	88	
			1.74	II	5660	*(25200)*				1.74	II	5820	*(25900)*	1H	**4A110**	88	
			2.02	III	5660	*(25200)*				2.02	III	5820	*(25900)*	1H	**4A115**	88	
			2.21	III	5660	*(25200)*				2.21	III	5820	*(25900)*	1H	**4A120**	88	
			2.81	III	9870	*(43900)*				2.81	III	9400	*(41800)*	1H	**4B120**	88	
14.3	6000	*(678)*	1.10	I	5490	*(24400)*	17.2	4970	*(562)*	1.10	I	5700	*(25400)*	1H	**4A100**	102	
			1.45	II	5490	*(24400)*				1.45	II	5700	*(25400)*	1H	**4A105**	102	
			1.73	II	5490	*(24400)*				1.73	II	5700	*(25400)*	1H	**4A110**	102	
			1.90	II	5490	*(24400)*				1.90	II	5700	*(25400)*	1H	**4A115**	102	
			2.61	III	9810	*(43600)*				2.72	III	9770	*(43500)*	1H	**4B120**	102	
12.9	6620	*(748)*	0.89	-	5330	*(23700)*	15.6	5490	*(620)*	0.89	-	5600	*(24900)*	1H	**4A100**	112	
			1.09	I	5330	*(23700)*				1.09	I	5600	*(24900)*	1H	**4A105**	112	
			1.36	I	5330	*(23700)*				1.36	I	5600	*(24900)*	1H	**4A110**	112	
			1.65	II	5330	*(23700)*				1.65	II	5600	*(24900)*	1H	**4A115**	112	
			1.72	II	5330	*(23700)*				1.72	II	5600	*(24900)*	1H	**4A120**	112	
			2.16	III	9760	*(43400)*				2.26	III	9850	*(43800)*	1H	**4B120**	112	
			2.61	III	9760	*(43400)*				2.89	III	9850	*(43800)*	1H	**4B125**	112	
11.8	7240	*(818)*	0.89	-	5150	*(22900)*	14.3	6000	*(678)*	0.89	-	5490	*(24400)*	1H	**4A100**	123	
			1.09	I	5150	*(22900)*				1.09	I	5490	*(24400)*	1H	**4A105**	123	
			1.36	I	5150	*(22900)*				1.36	I	5490	*(24400)*	1H	**4A110**	123	
			1.58	II	5150	*(22900)*				1.58	II	5490	*(24400)*	1H	**4A115**	123	
			2.16	III	9700	*(43100)*				2.26	III	9810	*(43600)*	1H	**4B120**	123	
			2.61	III	9700	*(43100)*				2.89	III	9810	*(43600)*	1H	**4B125**	123	
9.63	8900	*(1010)*	0.98	-	4560	*(20300)*	11.6	7370	*(833)*	0.98	-	5110	*(22700)*	1H	**4A105**	151	
			1.18	I	4560	*(20300)*				1.18	I	5110	*(22700)*	1H	**4A110**	151	
			1.28	I	4560	*(20300)*				1.28	I	5110	*(22700)*	1H	**4A115**	151	
			1.74	II	9510	*(42300)*				1.74	II	9680	*(43100)*	1H	**4B120**	151	
			2.13	III	9510	*(42300)*				2.16	III	9680	*(43100)*	1H	**4B125**	151	
			2.56	III	9510	*(42300)*				2.56	III	9680	*(43100)*	1H	**4B140**	151	

Notes: [1] For Y4 Double Reductions (4XXXDX) refer to the above table; for Y4 single reduction refer to tables on pages 2.91-2.130.
[2] Variable Frequency Drive (VFD) notes (see page 2.8 for Constant Torque Speed Ranges):
All 1HP+ motors require EP suffix in model number and can be used with a VFD, unless noted.

Standard Mounting Selection Tables

1.5 HP (1.1 kW)

Standard Mounting Positions:

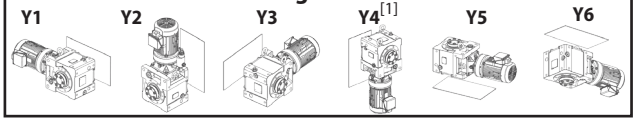

Dimension Pages:

Single Reduction	2.132-2.143
Single Reduction,Y2	2.144
Double Reduction	2.146-2.161
Double Reduction, Y2	2.162

Frequency	50 Hz	60 Hz
Input Speed	1450 RPM	1750 RPM
Number of Poles	4	

50Hz							60 Hz							Selection			
Output Speed (RPM)	Output Torque		Service Factor		Solid Shaft Overhung Load		Output Speed (RPM)	Output Torque		Service Factor		Solid Shaft Overhung Load		Base			VFD[2]
	in•lbs	(N•m)	SF	AGMA Class	lbs	(N)		in•lbs	(N•m)	SF	AGMA Class	lbs	(N)	Motor Power Code	Frame Size	Ratio	
8.12	10600	(1190)	1.01	I	3720	(16600)	9.80	8740	(988)	1.01	I	4620	(20600)	1H	**4A115**	179	
			1.08	I	3720	(16600)				1.08	I	4620	(20600)	1H	**4A120**	179	
			1.48	II	9290	(41300)				1.56	II	9530	(42400)	1H	**4B120**	179	
			1.79	II	9290	(41300)				2.07	III	9530	(42400)	1H	**4B125**	179	
			2.16	III	9290	(41300)				2.16	III	9530	(42400)	1H	**4B140**	179	
7.02	12200	(1380)	0.92	-	2400	(10700)	8.47	10100	(1140)	0.92	-	3980	(17700)	1H	**4A115**	207	
			0.94	-	2400	(10700)				0.94	-	3980	(17700)	1H	**4A125**	207	
			1.18	I	9020	(40100)				1.18	I	9350	(41600)	1H	**4B120**	207	
			1.47	II	9020	(40100)				1.47	II	9350	(41600)	1H	**4B125**	207	
			1.86	II	9020	(40100)				1.86	II	9350	(41600)	1H	**4B145**	207	
			2.69	III	15800	(70100)				2.69	III	15900	(70600)	1H	**4C140**	207	
			2.89	III	15800	(70100)				3.32	III	15900	(70600)	1H	**4C145**	207	
5.84	14700	(1660)	1.03	I	8510	(37900)	7.04	12200	(1380)	1.09	I	9020	(40100)	1H	**4B125**	249	
			1.55	II	8510	(37900)				1.55	II	9020	(40100)	1H	**4B145**	249	
			2.21	III	15600	(69300)				2.21	III	15800	(70100)	1H	**4C140**	249	
			2.38	III	15600	(69300)				2.75	III	15800	(70100)	1H	**4C145**	249	
4.76	18000	(2030)	0.93	-	7630	(33900)	5.75	14900	(1690)	1.03	I	8460	(37600)	1H	**4B125**	305	
			1.26	I	7630	(33900)				1.26	I	8460	(37600)	1H	**4B145**	305	
			1.80	II	15300	(68000)				1.80	II	15600	(69200)	1H	**4C140**	305	
			1.96	II	15300	(68000)				2.25	III	15600	(69200)	1H	**4C145**	305	
			2.46	III	15300	(68000)				2.53	III	15600	(69200)	1H	**4C160**	305	
3.98	20400	(2310)	0.93	-	6320	(28100)	4.81	16900	(1910)	1.12	I	7680	(34200)	1H	**4B12DB**	364	
			1.11	I	6320	(28100)				1.34	I	7680	(34200)	1H	**4B14DB**	364	
			1.38	I	14900	(66300)				1.38	I	15300	(68100)	1H	**4C14DB**	364	
			2.02	III	14900	(66300)				2.44	III	15300	(68100)	1H	**4C14DC**	364	
			2.23	III	14900	(66300)				2.69	III	15300	(68100)	1H	**4C16DB**	364	
3.42	23800	(2680)	0.96	-	4280	(19000)	4.13	19700	(2220)	1.16	I	6650	(29600)	1H	**4B14DB**	424	
			1.38	I	14400	(64200)				1.38	I	15000	(66700)	1H	**4C14DB**	424	
			1.64	II	14400	(64200)				1.98	II	15000	(66700)	1H	**4C14DC**	424	
			1.91	II	14400	(64200)				2.31	III	15000	(66700)	1H	**4C16DB**	424	
			2.66	III	21200	(94500)				2.89	III	21500	(95700)	1H	**4D16DB**	424	
			2.89	III	21200	(94500)				2.89	III	21500	(95700)	1H	**4D17DB**	424	
2.90	28100	(3170)	1.38	I	13700	(61000)	3.50	23300	(2630)	1.38	I	14500	(64600)	1H	**4C14DB**	501	
			1.62	II	13700	(61000)				1.96	II	14500	(64600)	1H	**4C16DB**	501	
			2.25	III	20900	(92900)				2.72	III	21300	(94600)	1H	**4D16DB**	501	
			2.89	III	22400	(99600)				2.89	III	22600	(101000)	1H	**4E17DB**	501	

Notes: [1] For Y4 Double Reductions (4XXXDX) refer to the above table; for Y4 single reduction refer to tables on pages 2.91-2.130..

[2] Variable Frequency Drive (VFD) notes (see page 2.8 for Constant Torque Speed Ranges):
All 1HP+ motors require EP suffix in model number and can be used with a VFD, unless noted.

Standard Mounting Selection Tables

1.5 HP (1.1 kW)

Standard Mounting Positions:

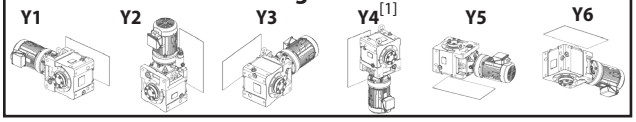

Dimension Pages:

Single Reduction	2.132-2.143
Single Reduction,Y2	2.144
Double Reduction	2.146-2.161
Double Reduction, Y2	2.162

Frequency	50 Hz	60 Hz
Input Speed	1450 RPM	1750 RPM
Number of Poles	4	

50Hz							60 Hz							Selection			
Output Speed (RPM)	Output Torque		Service Factor		Solid Shaft Overhung Load		Output Speed (RPM)	Output Torque		Service Factor		Solid Shaft Overhung Load		Base			VFD[2]
	in•lbs	(N•m)	SF	AGMA Class	lbs	(N)		in•lbs	(N•m)	SF	AGMA Class	lbs	(N)	Motor Power Code	Frame Size	Ratio	
2.51	32400	(3660)	1.26	I	12800	(56900)	3.03	26800	(3030)	1.38	I	13900	(62000)	1H	**4C14DB**	578	
			1.38	I	12800	(56900)				1.38	I	13900	(62000)	1H	**4C16DA**	578	
			1.95	II	20500	(91000)				2.36	III	21000	(93400)	1H	**4D16DB**	578	
			2.38	III	20500	(91000)				2.87	III	21000	(93400)	1H	**4D17DB**	578	
			2.89	III	22200	(98600)				2.89	III	22400	(99800)	1H	**4E17DB**	578	
2.12	38300	(4330)	1.07	I	11200	(49800)	2.56	31700	(3580)	1.29	I	13000	(57600)	1H	**4C14DB**	683	
			1.19	I	11200	(49800)				1.38	I	13000	(57600)	1H	**4C16DA**	683	
			1.38	I	19800	(87900)				1.38	I	20500	(91300)	1H	**4D16DA**	683	
			1.65	II	19800	(87900)				1.99	II	20500	(91300)	1H	**4D16DB**	683	
			2.02	III	19800	(87900)				2.43	III	20500	(91300)	1H	**4D17DB**	683	
			2.48	III	21900	(97300)				2.89	III	22200	(98700)	1H	**4E17DB**	683	
			2.68	III	21900	(97300)				3.24	III	22200	(98700)	1H	**4E18DB**	683	
1.79	45400	(5130)	0.89	-	8430	(37500)	2.16	37600	(4250)	1.07	I	11400	(50800)	1H	**4C14DB**	809	
			1.00	I	8430	(37500)				1.21	I	11400	(50800)	1H	**4C16DA**	809	
			1.38	I	18700	(83400)				1.38	I	19900	(88300)	1H	**4D16DA**	809	
			1.70	II	18700	(83400)				2.05	III	19900	(88300)	1H	**4D17DB**	809	
			2.09	III	21500	(95700)				2.52	III	21900	(97400)	1H	**4E17DB**	809	
			2.26	III	21500	(95700)				2.73	III	21900	(97400)	1H	**4E18DA**	809	
			2.89	III	30200	(134000)				2.89	III	30500	(136000)	1H	**4F18DA**	809	
1.52	53600	(6060)	1.18	I	17200	(76600)	1.83	44400	(5020)	1.38	I	18900	(84000)	1H	**4D16DA**	956	
			1.38	I	17200	(76600)				1.38	I	18900	(84000)	1H	**4D17DA**	956	
			1.44	II	17200	(76600)				1.74	II	18900	(84000)	1H	**4D17DB**	956	
			1.77	II	21100	(93800)				2.14	III	21600	(95900)	1H	**4E17DB**	956	
			1.92	II	21100	(93800)				2.31	III	21600	(95900)	1H	**4E18DA**	956	
			2.81	III	29900	(133000)				2.89	III	30200	(135000)	1H	**4F18DA**	956	
			2.81	III	29900	(133000)				3.39	III	30200	(135000)	1H	**4F18DB**	956	
			2.87	III	29900	(133000)				3.47	III	30200	(135000)	1H	**4F19DA**	956	
1.30	62600	(7080)	1.01	I	15000	(66900)	1.57	51900	(5860)	1.22	I	17600	(78100)	1H	**4D16DA**	1117	
			1.23	I	15000	(66900)				1.38	I	17600	(78100)	1H	**4D17DA**	1117	
			1.38	I	20600	(91800)				1.38	I	21200	(94200)	1H	**4E17DA**	1117	
			1.51	II	20600	(91800)				1.83	II	21200	(94200)	1H	**4E17DB**	1117	
			1.64	II	20600	(91800)				1.98	II	21200	(94200)	1H	**4E18DA**	1117	
			2.40	III	29500	(131000)				2.89	III	29900	(133000)	1H	**4F18DA**	1117	
			2.40	III	29500	(131000)				2.90	III	29900	(133000)	1H	**4F18DB**	1117	
			2.46	III	29500	(131000)				2.97	III	29900	(133000)	1H	**4F19DA**	1117	

Notes: [1] For Y4 Double Reductions (4XXXDX) refer to the above table; for Y4 single reduction refer to tables on pages 2.91-2.130.
[2] Variable Frequency Drive (VFD) notes (see page 2.8 for Constant Torque Speed Ranges):
All 1HP+ motors require EP suffix in model number and can be used with a VFD, unless noted.

Standard Mounting Selection Tables

1.5 HP (1.1 kW)

Standard Mounting Positions:

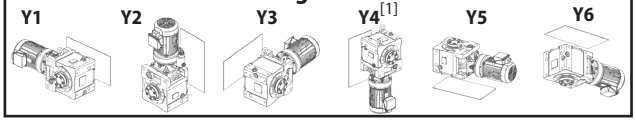

Dimension Pages:

Single Reduction	2.132-2.143
Single Reduction,Y2	2.144
Double Reduction	2.146-2.161
Double Reduction, Y2	2.162

Frequency	50 Hz	60 Hz
Input Speed	1450 RPM	1750 RPM
Number of Poles	4	

50Hz						60 Hz						Selection			
Output Speed (RPM)	Output Torque		Service Factor		Solid Shaft Overhung Load		Output Speed (RPM)	Output Torque		Service Factor		Solid Shaft Overhung Load		Base			VFD[2]
	in•lbs	(N•m)	SF	AGMA Class	lbs	(N)		in•lbs	(N•m)	SF	AGMA Class	lbs	(N)	Motor Power Code	Frame Size	Ratio	
1.10	74000	(8360)	0.85	-	11000	(49100)	1.33	61300	(6930)	1.03	I	15400	(68500)	1H	**4D16DA**	1320	
			1.04	I	11000	(49100)				1.26	I	15400	(68500)	1H	**4D17DA**	1320	
			1.28	I	20100	(89200)				1.38	I	20700	(92100)	1H	**4E17DA**	1320	
			1.39	I	20100	(89200)				1.67	II	20700	(92100)	1H	**4E18DA**	1320	
			2.03	III	29000	(129000)				2.45	III	29500	(131000)	1H	**4F18DA**	1320	
			2.08	III	29000	(129000)				2.51	III	29500	(131000)	1H	**4F19DA**	1320	
0.876	92900	(10500)	1.02	I	19100	(85000)	1.06	77000	(8700)	1.23	I	19900	(88500)	1H	**4E17DA**	1656	
			1.11	I	19100	(85000)				1.33	I	19900	(88500)	1H	**4E18DA**	1656	
			1.62	II	28200	(125000)				1.96	II	28800	(128000)	1H	**4F18DA**	1656	
			1.66	II	28200	(125000)				2.00	III	28800	(128000)	1H	**4F19DA**	1656	
0.741	110000	(12400)	0.86	-	14700	(65300)	0.894	91000	(10300)	1.04	I	19200	(85400)	1H	**4E17DA**	1957	
			0.94	-	14700	(65300)				1.13	I	19200	(85400)	1H	**4E18DA**	1957	
			1.37	I	27400	(122000)				1.66	II	28200	(126000)	1H	**4F18DA**	1957	
			1.40	II	27400	(122000)				1.69	II	28200	(126000)	1H	**4F19DA**	1957	
0.638	127000	(14400)	0.81	-	3570	(15900)	0.770	106000	(11900)	0.97	-	16100	(71600)	1H	**4E18DA**	2272	
			1.18	I	26700	(119000)				1.43	II	27600	(123000)	1H	**4F18DA**	2272	
			1.21	I	26700	(119000)				1.46	II	27600	(123000)	1H	**4F19DA**	2272	
0.567	144000	(16200)	1.05	I	26000	(115000)	0.684	119000	(13400)	1.27	I	27000	(120000)	1H	**4F18DA**	2559	
			1.07	I	26000	(115000)				1.29	I	27000	(120000)	1H	**4F19DA**	2559	
0.493	165000	(18700)	0.91	-	25000	(111000)	0.595	137000	(15500)	1.10	I	26300	(117000)	1H	**4F18DA**	2944	
			0.93	-	25000	(111000)				1.13	I	26300	(117000)	1H	**4F19DA**	2944	

Sold & Serviced By:
ELECTROMATE
Toll Free Phone (877) SERV098
www.electromate.com
sales@electromate.com

Notes: [1] For Y4 Double Reductions (4XXXDX) refer to the above table; for Y4 single reduction refer to tables on pages 2.91-2.130..
[2] Variable Frequency Drive (VFD) notes (see page 2.8 for Constant Torque Speed Ranges):
All 1HP+ motors require EP suffix in model number and can be used with a VFD, unless noted.

Standard Mounting Selection Tables

2 HP (1.5 kW)

Standard Mounting Positions:

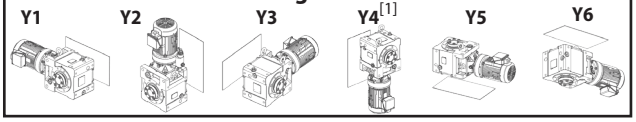

Dimension Pages:

Single Reduction	2.132-2.143
Single Reduction,Y2	2.144
Double Reduction	2.146-2.161
Double Reduction, Y2	2.162

Frequency	50 Hz	60 Hz
Input Speed	1450 RPM	1750 RPM
Number of Poles	4	

50Hz							60 Hz							Selection			
Output Speed (RPM)	Output Torque		Service Factor		Solid Shaft Overhung Load		Output Speed (RPM)	Output Torque		Service Factor		Solid Shaft Overhung Load		Base			VFD[2]
	in•lbs	*(N•m)*	SF	AGMA Class	lbs	*(N)*		in•lbs	*(N•m)*	SF	AGMA Class	lbs	*(N)*	Motor Power Code	Frame Size	Ratio	
138	847	*(96)*	1.56	II	3980	*(17700)*	167	701	*(79)*	1.56	II	3770	*(16800)*	2	**4A100**	11	
			2.12	III	3980	*(17700)*				2.12	III	3770	*(16800)*	2	**4A105**	11	
113	1030	*(117)*	1.56	II	4200	*(18700)*	137	855	*(97)*	1.56	II	3990	*(17800)*	2	**4A100**	13	
			2.12	III	4200	*(18700)*				2.12	III	3990	*(17800)*	2	**4A105**	13	
104	1130	*(128)*	1.56	II	4310	*(19200)*	125	935	*(106)*	1.56	II	4090	*(18200)*	2	**4A100**	14	
			2.12	III	4310	*(19200)*				2.12	III	4090	*(18200)*	2	**4A105**	14	
90.6	1290	*(146)*	1.56	II	4470	*(19900)*	109	1070	*(121)*	1.56	II	4250	*(18900)*	2	**4A100**	16	
			2.12	III	4470	*(19900)*				2.12	III	4250	*(18900)*	2	**4A105**	16	
82.9	1410	*(159)*	1.56	II	4580	*(20400)*	100.0	1170	*(132)*	1.56	II	4350	*(19400)*	2	**4A100**	18	
			2.12	III	4580	*(20400)*				2.12	III	4350	*(19400)*	2	**4A105**	18	
69.0	1690	*(191)*	1.57	II	4810	*(21400)*	83.3	1400	*(158)*	1.57	II	4570	*(20300)*	2	**4A100**	21	
			2.12	III	4810	*(21400)*				2.12	III	4570	*(20300)*	2	**4A105**	21	
			2.61	III	4810	*(21400)*				2.61	III	4570	*(20300)*	2	**4A115**	21	
51.8	2260	*(255)*	1.57	II	5190	*(23100)*	62.5	1870	*(211)*	1.57	II	4940	*(22000)*	2	**4A100**	28	
			2.12	III	5190	*(23100)*				2.12	III	4940	*(22000)*	2	**4A105**	28	
			2.61	III	5190	*(23100)*				2.61	III	4940	*(22000)*	2	**4A115**	28	
41.2	2840	*(321)*	1.57	II	5500	*(24500)*	49.7	2350	*(266)*	1.57	II	5240	*(23300)*	2	**4A100**	35	
			2.12	III	5500	*(24500)*				2.12	III	5240	*(23300)*	2	**4A105**	35	
			2.61	III	5500	*(24500)*				2.61	III	5240	*(23300)*	2	**4A115**	35	
37.7	3100	*(351)*	1.57	II	5620	*(25000)*	45.5	2570	*(291)*	1.57	II	5360	*(23900)*	2	**4A100**	39	
			2.12	III	5620	*(25000)*				2.12	III	5360	*(23900)*	2	**4A105**	39	
			2.61	III	5620	*(25000)*				2.61	III	5360	*(23900)*	2	**4A115**	39	
31.9	3670	*(414)*	1.57	II	5860	*(26000)*	38.5	3040	*(343)*	1.57	II	5590	*(24900)*	2	**4A100**	46	
			2.12	III	5860	*(26000)*				2.12	III	5590	*(24900)*	2	**4A105**	46	
			2.60	III	5860	*(26000)*				2.60	III	5590	*(24900)*	2	**4A115**	46	
27.6	4230	*(478)*	1.57	II	5830	*(25900)*	33.3	3510	*(396)*	1.57	II	5790	*(25800)*	2	**4A100**	53	
			2.12	III	5830	*(25900)*				2.12	III	5790	*(25800)*	2	**4A105**	53	
			2.60	III	5830	*(25900)*				2.60	III	5790	*(25800)*	2	**4A115**	53	
			2.70	III	5830	*(25900)*				2.70	III	5790	*(25800)*	2	**4A120**	53	
24.4	4800	*(542)*	1.33	I	5740	*(25500)*	29.4	3970	*(449)*	1.33	I	5870	*(26100)*	2	**4A100**	60	
			1.64	II	5740	*(25500)*				1.64	II	5870	*(26100)*	2	**4A105**	60	
			2.38	III	5740	*(25500)*				2.38	III	5870	*(26100)*	2	**4A115**	60	
21.6	5420	*(612)*	1.27	I	5610	*(25000)*	26.0	4490	*(507)*	1.29	I	5790	*(25700)*	2	**4A100**	67	
			1.52	II	5610	*(25000)*				1.56	II	5790	*(25700)*	2	**4A105**	67	
			2.07	III	5610	*(25000)*				2.07	III	5790	*(25700)*	2	**4A115**	67	
			2.11	III	5610	*(25000)*				2.11	III	5790	*(25700)*	2	**4A120**	67	
			2.64	III	9050	*(40300)*				2.64	III	8630	*(38400)*	2	**4B120**	67	

Notes: [1] For Y4 Double Reductions (4XXXDX) refer to the above table; for Y4 single reduction refer to tables on pages 2.91-2.130.
[2] Variable Frequency Drive (VFD) notes (see page 2.8 for Constant Torque Speed Ranges):
All 1HP+ motors require EP suffix in model number and can be used with a VFD, unless noted.

Standard Mounting Selection Tables

2 HP (1.5 kW)

Standard Mounting Positions:

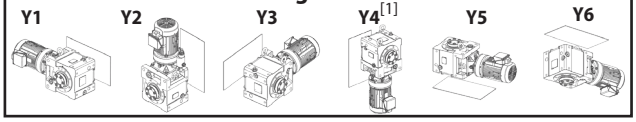

Dimension Pages:

Single Reduction	2.132-2.143
Single Reduction,Y2	2.144
Double Reduction	2.146-2.161
Double Reduction, Y2	2.162

Frequency	50 Hz	60 Hz
Input Speed	1450 RPM	1750 RPM
Number of Poles	4	

50Hz							60 Hz							Selection			
Output Speed (RPM)	Output Torque		Service Factor		Solid Shaft Overhung Load		Output Speed (RPM)	Output Torque		Service Factor		Solid Shaft Overhung Load		Base			VFD[2]
	in•lbs	(N•m)	SF	AGMA Class	lbs	(N)		in•lbs	(N•m)	SF	AGMA Class	lbs	(N)	Motor Power Code	Frame Size	Ratio	
19.7	5930	(669)	1.27	I	5500	(24500)	23.8	4910	(555)	1.29	I	5710	(25400)	2	**4A100**	74	
			1.52	II	5500	(24500)				1.56	II	5710	(25400)	2	**4A105**	74	
			1.93	II	5500	(24500)				1.93	II	5710	(25400)	2	**4A115**	74	
			2.64	III	9260	(41200)				2.64	III	8830	(39300)	2	**4B120**	74	
18.1	6450	(729)	1.11	I	5370	(23900)	21.9	5340	(604)	1.11	I	5630	(25000)	2	**4A105**	80	
			1.48	II	5370	(23900)				1.48	II	5630	(25000)	2	**4A115**	80	
			1.77	II	5370	(23900)				1.77	II	5630	(25000)	2	**4A120**	80	
			2.06	III	9460	(42100)				2.06	III	9020	(40100)	2	**4B120**	80	
			2.64	III	9460	(42100)				2.64	III	9020	(40100)	2	**4B125**	80	
16.6	7050	(797)	1.11	I	5210	(23200)	20.0	5840	(660)	1.11	I	5520	(24600)	2	**4A105**	88	
			1.48	II	5210	(23200)				1.48	II	5520	(24600)	2	**4A115**	88	
			1.62	II	5210	(23200)				1.62	II	5520	(24600)	2	**4A120**	88	
			2.06	III	9670	(43000)				2.06	III	9230	(41100)	2	**4B120**	88	
			2.64	III	9670	(43000)				2.64	III	9230	(41100)	2	**4B125**	88	
14.3	8180	(925)	1.06	I	4840	(21500)	17.2	6780	(766)	1.06	I	5290	(23500)	2	**4A105**	102	
			1.40	II	4840	(21500)				1.40	II	5290	(23500)	2	**4A115**	102	
			1.91	II	9600	(42700)				1.99	II	9580	(42600)	2	**4B120**	102	
			2.31	III	9600	(42700)				2.51	III	9580	(42600)	2	**4B125**	102	
			2.78	III	9600	(42700)				2.78	III	9580	(42600)	2	**4B140**	102	
12.9	9030	(1020)	1.00	I	4500	(20000)	15.6	7480	(845)	1.00	I	5080	(22600)	2	**4A110**	112	
			1.26	I	4500	(20000)				1.26	I	5080	(22600)	2	**4A120**	112	
			1.58	II	9500	(42200)				1.66	II	9670	(43000)	2	**4B120**	112	
			1.92	II	9500	(42200)				2.12	III	9670	(43000)	2	**4B125**	112	
			2.52	III	9500	(42200)				2.52	III	9670	(43000)	2	**4B140**	112	
11.8	9880	(1120)	0.80	-	4100	(18300)	14.3	8180	(925)	0.80	-	4840	(21500)	2	**4A105**	123	
			1.00	I	4100	(18300)				1.00	I	4840	(21500)	2	**4A110**	123	
			1.16	I	4100	(18300)				1.16	I	4840	(21500)	2	**4A115**	123	
			1.58	II	9390	(41800)				1.66	II	9600	(42700)	2	**4B120**	123	
			1.92	II	9390	(41800)				2.12	III	9600	(42700)	2	**4B125**	123	
			2.30	III	9390	(41800)				2.30	III	9600	(42700)	2	**4B140**	123	
9.63	12100	(1370)	0.94	-	2480	(11000)	11.6	10100	(1140)	0.94	-	4010	(17800)	2	**4A115**	151	
			1.27	I	9030	(40200)				1.27	I	9360	(41600)	2	**4B120**	151	
			1.56	II	9030	(40200)				1.59	II	9360	(41600)	2	**4B125**	151	
			1.87	II	9030	(40200)				1.87	II	9360	(41600)	2	**4B140**	151	
			2.63	III	15700	(69900)				2.63	III	15000	(66700)	2	**4C140**	151	

Notes: [1] For Y4 Double Reductions (4XXXDX) refer to the above table; for Y4 single reduction refer to tables on pages 2.91-2.130..
[2] Variable Frequency Drive (VFD) notes (see page 2.8 for Constant Torque Speed Ranges):
All 1HP+ motors require EP suffix in model number and can be used with a VFD, unless noted.

Standard Mounting Selection Tables

2 HP (1.5 kW)

Standard Mounting Positions:

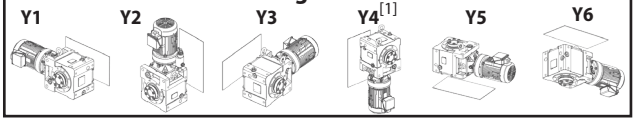

Dimension Pages:

Single Reduction	2.132-2.143
Single Reduction,Y2	2.144
Double Reduction	2.146-2.161
Double Reduction, Y2	2.162

Frequency	50 Hz	60 Hz
Input Speed	1450 RPM	1750 RPM
Number of Poles	4	

50Hz							60 Hz						Selection			
Output Speed (RPM)	Output Torque		Service Factor		Solid Shaft Overhung Load		Output Speed (RPM)	Output Torque		Service Factor		Solid Shaft Overhung Load		Base			VFD[2]
	in•lbs	*(N•m)*	SF	AGMA Class	lbs	*(N)*		in•lbs	*(N•m)*	SF	AGMA Class	lbs	*(N)*	Motor Power Code	Frame Size	Ratio	
8.12	14400	*(1630)*	1.09	I	8580	*(38200)*	9.80	11900	*(1350)*	1.15	I	9070	*(40300)*	2	**4B120**	179	
			1.32	I	8580	*(38200)*				1.52	II	9070	*(40300)*	2	**4B125**	179	
			1.58	II	8580	*(38200)*				1.58	II	9070	*(40300)*	2	**4B140**	179	
			2.29	III	15600	*(69400)*				2.29	III	15700	*(69600)*	2	**4C140**	179	
			2.47	III	15600	*(69400)*				2.81	III	15700	*(69600)*	2	**4C145**	179	
7.02	16600	*(1880)*	1.08	I	8030	*(35700)*	8.47	13800	*(1560)*	1.08	I	8710	*(38700)*	2	**4B125**	207	
			1.37	I	8030	*(35700)*				1.37	I	8710	*(38700)*	2	**4B140**	207	
			1.97	II	15400	*(68600)*				1.97	II	15600	*(69600)*	2	**4C140**	207	
			2.12	III	15400	*(68600)*				2.43	III	15600	*(69600)*	2	**4C145**	207	
			2.66	III	15400	*(68600)*				2.73	III	15600	*(69600)*	2	**4C160**	207	
			2.95	III	21700	*(96700)*				2.95	III	21900	*(97200)*	2	**4D160**	207	
5.84	20000	*(2260)*	1.14	I	6930	*(30800)*	7.04	16600	*(1880)*	1.14	I	8040	*(35800)*	2	**4B140**	249	
			1.62	II	15100	*(67100)*				1.62	II	15400	*(68600)*	2	**4C140**	249	
			1.75	II	15100	*(67100)*				2.02	III	15400	*(68600)*	2	**4C145**	249	
			2.21	III	15100	*(67100)*				2.27	III	15400	*(68600)*	2	**4C160**	249	
			2.31	III	21600	*(95900)*				2.31	III	21700	*(96700)*	2	**4D160**	249	
4.76	24500	*(2770)*	0.93	-	4640	*(20600)*	5.75	20300	*(2300)*	0.93	-	6810	*(30300)*	2	**4B140**	305	
			1.44	II	14500	*(64500)*				1.65	II	15000	*(66900)*	2	**4C145**	305	
			1.81	II	14500	*(64500)*				1.85	II	15000	*(66900)*	2	**4C160**	305	
			2.15	III	21300	*(94600)*				2.31	III	21500	*(95800)*	2	**4D160**	305	
			2.51	III	21300	*(94600)*				2.60	III	21500	*(95800)*	2	**4D165**	305	
3.98	27800	*(3150)*	1.01	I	13800	*(61200)*	4.81	23100	*(2610)*	1.01	I	14500	*(64700)*	2	**4C14DB**	364	
			1.48	II	13800	*(61200)*				1.79	II	14500	*(64700)*	2	**4C14DC**	364	
			1.63	II	13800	*(61200)*				1.97	II	14500	*(64700)*	2	**4C16DB**	364	
			2.12	III	20900	*(93000)*				2.12	III	21300	*(94700)*	2	**4D16DB**	364	
			2.27	III	20900	*(93000)*				2.74	III	21300	*(94700)*	2	**4D16DC**	364	
			2.77	III	20900	*(93000)*				3.34	III	21300	*(94700)*	2	**4D17DC**	364	
3.42	32400	*(3660)*	1.01	I	12800	*(56900)*	4.13	26800	*(3030)*	1.01	I	13900	*(62000)*	2	**4C14DB**	424	
			1.40	II	12800	*(56900)*				1.69	II	13900	*(62000)*	2	**4C16DB**	424	
			1.95	II	20500	*(91000)*				2.12	III	21000	*(93400)*	2	**4D16DB**	424	
			2.12	III	20500	*(91000)*				2.12	III	21000	*(93400)*	2	**4D17DB**	424	
			2.93	III	22200	*(98600)*				3.53	III	22400	*(99800)*	2	**4E17DC**	424	
2.90	38300	*(4330)*	1.01	I	11200	*(49800)*	3.50	31700	*(3580)*	1.01	I	13000	*(57600)*	2	**4C14DB**	501	
			1.19	I	11200	*(49800)*				1.43	II	13000	*(57600)*	2	**4C16DB**	501	
			1.65	II	19800	*(87900)*				1.99	II	20500	*(91300)*	2	**4D16DB**	501	
			2.02	III	19800	*(87900)*				2.12	III	20500	*(91300)*	2	**4D17DB**	501	
			2.48	III	21900	*(97300)*				2.99	III	22200	*(98700)*	2	**4E17DC**	501	
			2.68	III	21900	*(97300)*				3.24	III	22200	*(98700)*	2	**4E18DB**	501	

Notes: [1] For Y4 Double Reductions (4XXXDX) refer to the above table; for Y4 single reduction refer to tables on pages 2.91-2.130.
[2] Variable Frequency Drive (VFD) notes (see page 2.8 for Constant Torque Speed Ranges):
All 1HP+ motors require EP suffix in model number and can be used with a VFD, unless noted.

Standard Mounting Selection Tables

2 HP (1.5 kW)

Standard Mounting Positions:

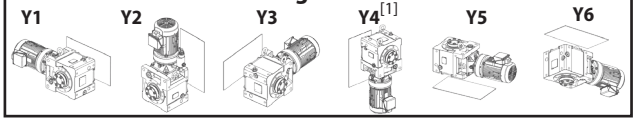

Dimension Pages:

Single Reduction	2.132-2.143
Single Reduction,Y2	2.144
Double Reduction	2.146-2.161
Double Reduction, Y2	2.162

Frequency	50 Hz	60 Hz
Input Speed	1450 RPM	1750 RPM
Number of Poles	4	

50Hz							60 Hz							Selection			
Output Speed (RPM)	Output Torque		Service Factor		Solid Shaft Overhung Load		Output Speed (RPM)	Output Torque		Service Factor		Solid Shaft Overhung Load		Base			VFD[2]
	in•lbs	(N•m)	SF	AGMA Class	lbs	(N)		in•lbs	(N•m)	SF	AGMA Class	lbs	(N)	Motor Power Code	Frame Size	Ratio	
2.51	44200	(4990)	0.93	-	8990	(40000)	3.03	36600	(4140)	1.01	I	11700	(52100)	2	**4C14DB**	578	
			1.01	I	8990	(40000)				1.01	I	11700	(52100)	2	**4C16DA**	578	
			1.43	II	18900	(84200)				1.73	II	20000	(88900)	2	**4D16DB**	578	
			1.75	II	18900	(84200)				2.11	III	20000	(88900)	2	**4D17DB**	578	
			2.15	III	21600	(95900)				2.59	III	22000	(97600)	2	**4E17DC**	578	
			2.32	III	21600	(95900)				2.80	III	22000	(97600)	2	**4E18DB**	578	
2.12	52200	(5900)	0.87	-	3070	(13700)	2.56	43300	(4890)	1.01	I	9390	(41800)	2	**4C16DA**	683	
			1.01	I	17500	(77900)				1.01	I	19100	(84800)	2	**4D16DA**	683	
			1.48	II	17500	(77900)				1.78	II	19100	(84800)	2	**4D17DB**	683	
			1.82	II	21200	(94100)				2.12	III	21600	(96100)	2	**4E17DB**	683	
			1.97	II	21200	(94100)				2.37	III	21600	(96100)	2	**4E18DB**	683	
			2.84	III	29900	(133000)				3.43	III	30300	(135000)	2	**4F18DB**	683	
			2.95	III	29900	(133000)				3.56	III	30300	(135000)	2	**4F19DA**	683	
1.79	61900	(6990)	1.01	I	15300	(67800)	2.16	51300	(5790)	1.01	I	17700	(78700)	2	**4D16DA**	809	
			1.25	I	15300	(67800)				1.51	II	17700	(78700)	2	**4D17DB**	809	
			1.53	II	20700	(91900)				1.85	II	21200	(94300)	2	**4E17DB**	809	
			1.66	II	20700	(91900)				2.00	III	21200	(94300)	2	**4E18DA**	809	
			2.12	III	29500	(131000)				2.12	III	30000	(133000)	2	**4F18DA**	809	
			2.43	III	29500	(131000)				2.94	III	30000	(133000)	2	**4F18DB**	809	
			2.49	III	29500	(131000)				3.00	III	30000	(133000)	2	**4F19DA**	809	
1.52	73100	(8260)	0.87	-	11400	(50900)	1.83	60600	(6840)	1.01	I	15600	(69400)	2	**4D16DA**	956	
			1.01	I	11400	(50900)				1.01	I	15600	(69400)	2	**4D17DA**	956	
			1.30	I	20100	(89400)				1.57	II	20700	(92200)	2	**4E17DB**	956	
			1.40	II	20100	(89400)				1.69	II	20700	(92200)	2	**4E18DA**	956	
			2.06	III	29000	(129000)				2.12	III	29500	(131000)	2	**4F18DA**	956	
			2.06	III	29000	(129000)				2.49	III	29500	(131000)	2	**4F18DB**	956	
			2.11	III	29000	(129000)				2.54	III	29500	(131000)	2	**4F19DA**	956	
1.30	85400	(9650)	0.90	-	272	(1210)	1.57	70800	(8000)	1.01	I	12400	(55100)	2	**4D17DA**	1117	
			1.01	I	19500	(86600)				1.01	I	20200	(89900)	2	**4E17DA**	1117	
			1.11	I	19500	(86600)				1.34	I	20200	(89900)	2	**4E17DB**	1117	
			1.20	I	19500	(86600)				1.45	II	20200	(89900)	2	**4E18DA**	1117	
			1.76	II	28500	(127000)				2.12	III	29100	(129000)	2	**4F18DA**	1117	
			1.76	II	28500	(127000)				2.13	III	29100	(129000)	2	**4F18DB**	1117	
			1.80	II	28500	(127000)				2.18	III	29100	(129000)	2	**4F19DA**	1117	
1.10	101000	(11400)	0.94	-	17500	(77800)	1.33	83600	(9450)	1.01	I	19600	(87000)	2	**4E17DA**	1320	
			1.02	I	17500	(77800)				1.23	I	19600	(87000)	2	**4E18DA**	1320	
			1.49	II	27800	(124000)				1.80	II	28600	(127000)	2	**4F18DA**	1320	
			1.53	II	27800	(124000)				1.84	II	28600	(127000)	2	**4F19DA**	1320	

Notes: [1] For Y4 Double Reductions (4XXXDX) refer to the above table; for Y4 single reduction refer to tables on pages 2.91-2.130..
[2] Variable Frequency Drive (VFD) notes (see page 2.8 for Constant Torque Speed Ranges):
All 1HP+ motors require EP suffix in model number and can be used with a VFD, unless noted.

Standard Mounting Selection Tables

2 HP (1.5 kW)

Standard Mounting Positions:

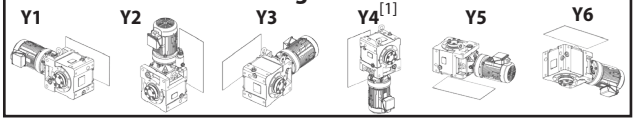

Dimension Pages:

Single Reduction	2.132-2.143
Single Reduction,Y2	2.144
Double Reduction	2.146-2.161
Double Reduction, Y2	2.162

Frequency	50 Hz	60 Hz
Input Speed	1450 RPM	1750 RPM
Number of Poles	4	

50Hz						60 Hz						Selection			
Output Speed (RPM)	Output Torque		Service Factor		Solid Shaft Overhung Load		Output Speed (RPM)	Output Torque		Service Factor		Solid Shaft Overhung Load		Base			VFD[2]
	in•lbs	*(N•m)*	SF	AGMA Class	lbs	*(N)*		in•lbs	*(N•m)*	SF	AGMA Class	lbs	*(N)*	Motor Power Code	Frame Size	Ratio	
0.876	127000	*(14300)*	0.81	-	4740	*(21100)*	1.06	105000	*(11900)*	0.98	-	16300	*(72500)*	2	**4E18DA**	1656	
			1.19	I	26700	*(119000)*				1.43	II	27600	*(123000)*	2	**4F18DA**	1656	
			1.22	I	26700	*(119000)*				1.47	II	27600	*(123000)*	2	**4F19DA**	1656	
0.741	150000	*(16900)*	1.01	I	25700	*(114000)*	0.894	124000	*(14000)*	1.21	I	26800	*(119000)*	2	**4F18DA**	1957	
			1.03	I	25700	*(114000)*				1.24	I	26800	*(119000)*	2	**4F19DA**	1957	
0.638	174000	*(19600)*	0.87	-	24500	*(109000)*	0.770	144000	*(16300)*	1.05	I	25900	*(115000)*	2	**4F18DA**	2272	
			0.89	-	24500	*(109000)*				1.07	I	25900	*(115000)*	2	**4F19DA**	2272	

Sold & Serviced By:
ELECTROMATE
Toll Free Phone (877) SERVO98
www.electromate.com
sales@electromate.com

Notes: [1] For Y4 Double Reductions (4XXXDX) refer to the above table; for Y4 single reduction refer to tables on pages 2.91-2.130.
[2] Variable Frequency Drive (VFD) notes (see page 2.8 for Constant Torque Speed Ranges):
All 1HP+ motors require EP suffix in model number and can be used with a VFD, unless noted.

Standard Mounting Selection Tables

3 HP (2.2 kW)

Standard Mounting Positions:

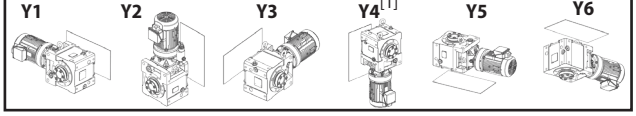

Dimension Pages:

Single Reduction	2.132-2.143
Single Reduction,Y2	2.144
Double Reduction	2.146-2.161
Double Reduction, Y2	2.162

Frequency	50 Hz	60 Hz
Input Speed	1450 RPM	1750 RPM
Number of Poles	4	

50Hz							60 Hz							Selection			
Output Speed (RPM)	Output Torque		Service Factor		Solid Shaft Overhung Load		Output Speed (RPM)	Output Torque		Service Factor		Solid Shaft Overhung Load		Base			VFD[2]
	in•lbs	*(N•m)*	SF	AGMA Class	lbs	*(N)*		in•lbs	*(N•m)*	SF	AGMA Class	lbs	*(N)*	Motor Power Code	Frame Size	Ratio	
138	1240	*(140)*	1.07	I	3930	*(17500)*	167	1030	*(116)*	1.07	I	3730	*(16600)*	3	**4A100**	11	
			1.45	II	3930	*(17500)*				1.45	II	3730	*(16600)*	3	**4A105**	11	
			4.36	III	3930	*(17500)*				4.36	III	3730	*(16600)*	3	**4A120**	11	
113	1510	*(171)*	1.07	I	4140	*(18400)*	137	1250	*(142)*	1.07	I	3940	*(17500)*	3	**4A100**	13	
			1.45	II	4140	*(18400)*				1.45	II	3940	*(17500)*	3	**4A105**	13	
			4.36	III	4140	*(18400)*				4.36	III	3940	*(17500)*	3	**4A120**	13	
104	1660	*(187)*	1.07	I	4240	*(18900)*	125	1370	*(155)*	1.07	I	4030	*(17900)*	3	**4A100**	14	
			1.45	II	4240	*(18900)*				1.45	II	4030	*(17900)*	3	**4A105**	14	
			4.36	III	4240	*(18900)*				4.36	III	4030	*(17900)*	3	**4A120**	14	
90.6	1890	*(214)*	1.07	I	4390	*(19500)*	109	1570	*(177)*	1.07	I	4180	*(18600)*	3	**4A100**	16	
			1.45	II	4390	*(19500)*				1.45	II	4180	*(18600)*	3	**4A105**	16	
			4.36	III	4360	*(19400)*				4.36	III	4150	*(18500)*	3	**4A120**	16	
82.9	2070	*(234)*	1.07	I	4490	*(20000)*	100.0	1710	*(194)*	1.07	I	4280	*(19000)*	3	**4A100**	18	
			1.45	II	4490	*(20000)*				1.45	II	4280	*(19000)*	3	**4A105**	18	
			4.36	III	4470	*(19900)*				4.36	III	4250	*(18900)*	3	**4A120**	18	
69.0	2480	*(281)*	1.07	I	4700	*(20900)*	83.3	2060	*(232)*	1.07	I	4480	*(19900)*	3	**4A100**	21	
			1.45	II	4700	*(20900)*				1.45	II	4480	*(19900)*	3	**4A105**	21	
			1.61	II	4700	*(20900)*				1.61	II	4480	*(19900)*	3	**4A110**	21	
			1.78	II	4700	*(20900)*				1.78	II	4480	*(19900)*	3	**4A115**	21	
			2.97	III	4700	*(20900)*				2.97	III	4480	*(19900)*	3	**4A120**	21	
64.7	2650	*(299)*	2.97	III	4780	*(21200)*	78.1	2190	*(248)*	2.97	III	4560	*(20300)*	3	**4A120**	22	
59.2	2900	*(327)*	2.97	III	4880	*(21700)*	71.4	2400	*(271)*	2.97	III	4660	*(20700)*	3	**4A120**	25	
51.8	3310	*(374)*	1.07	I	5040	*(22400)*	62.5	2740	*(310)*	1.07	I	4820	*(21400)*	3	**4A100**	28	
			1.45	II	5040	*(22400)*				1.45	II	4820	*(21400)*	3	**4A105**	28	
			1.61	II	5040	*(22400)*				1.61	II	4820	*(21400)*	3	**4A110**	28	
			1.78	II	5040	*(22400)*				1.78	II	4820	*(21400)*	3	**4A115**	28	
			2.97	III	5040	*(22400)*				2.97	III	4820	*(21400)*	3	**4A120**	28	
41.2	4160	*(470)*	1.07	I	5320	*(23600)*	49.7	3450	*(390)*	1.07	I	5090	*(22600)*	3	**4A100**	35	
			1.45	II	5320	*(23600)*				1.45	II	5090	*(22600)*	3	**4A105**	35	
			1.61	II	5320	*(23600)*				1.61	II	5090	*(22600)*	3	**4A110**	35	
			1.78	II	5320	*(23600)*				1.78	II	5090	*(22600)*	3	**4A115**	35	
			2.30	III	5320	*(23600)*				2.30	III	5090	*(22600)*	3	**4A120**	35	
			2.69	III	5320	*(23600)*				2.69	III	5090	*(22600)*	3	**4A125**	35	
			2.74	III	5320	*(23600)*				2.74	III	5090	*(22600)*	3	**4A140**	35	

Notes: [1] For Y4 Double Reductions (4XXXDX) refer to the above table; for Y4 single reduction refer to tables on pages 2.91-2.130..
[2] Variable Frequency Drive (VFD) notes (see page 2.8 for Constant Torque Speed Ranges):
All 1HP+ motors require EP suffix in model number and can be used with a VFD, unless noted.

Standard Mounting Selection Tables

3 HP (2.2 kW)

Standard Mounting Positions:

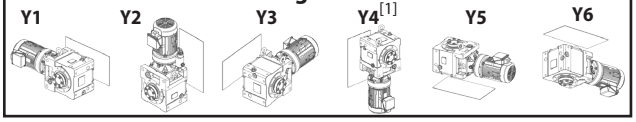

Dimension Pages:

Single Reduction	2.132-2.143
Single Reduction,Y2	2.144
Double Reduction	2.146-2.161
Double Reduction, Y2	2.162

Frequency	50 Hz	60 Hz
Input Speed	1450 RPM	1750 RPM
Number of Poles	4	

50Hz							60 Hz							Selection			
Output Speed (RPM)	Output Torque		Service Factor		Solid Shaft Overhung Load		Output Speed (RPM)	Output Torque		Service Factor		Solid Shaft Overhung Load		Base			VFD[2]
	in•lbs	*(N•m)*	SF	AGMA Class	lbs	*(N)*		in•lbs	*(N•m)*	SF	AGMA Class	lbs	*(N)*	Motor Power Code	Frame Size	Ratio	
37.7	4550	*(514)*	1.07	I	5420	*(24100)*	45.5	3770	*(426)*	1.07	I	5200	*(23100)*	3	**4A100**	39	
			1.45	II	5420	*(24100)*				1.45	II	5200	*(23100)*	3	**4A105**	39	
			1.61	II	5420	*(24100)*				1.61	II	5200	*(23100)*	3	**4A110**	39	
			1.78	II	5420	*(24100)*				1.78	II	5200	*(23100)*	3	**4A115**	39	
			2.30	III	5420	*(24100)*				2.30	III	5200	*(23100)*	3	**4A120**	39	
			2.51	III	5420	*(24100)*				2.51	III	5200	*(23100)*	3	**4A125**	39	
			2.69	III	7660	*(34100)*				2.69	III	7300	*(32500)*	3	**4B125**	39	
31.9	5380	*(608)*	1.07	I	5620	*(25000)*	38.5	4460	*(504)*	1.07	I	5400	*(24000)*	3	**4A100**	46	
			1.45	II	5620	*(25000)*				1.45	II	5400	*(24000)*	3	**4A105**	46	
			1.61	II	5620	*(25000)*				1.61	II	5400	*(24000)*	3	**4A110**	46	
			1.77	II	5620	*(25000)*				1.77	II	5400	*(24000)*	3	**4A115**	46	
			2.12	III	5620	*(25000)*				2.12	III	5400	*(24000)*	3	**4A120**	46	
			2.30	III	7990	*(35600)*				2.30	III	7620	*(33900)*	3	**4B120**	46	
			2.69	III	7990	*(35600)*				2.69	III	7620	*(33900)*	3	**4B125**	46	
27.6	6210	*(701)*	1.07	I	5440	*(24200)*	33.3	5140	*(581)*	1.07	I	5570	*(24800)*	3	**4A100**	53	
			1.45	II	5440	*(24200)*				1.45	II	5570	*(24800)*	3	**4A105**	53	
			1.61	II	5440	*(24200)*				1.61	II	5570	*(24800)*	3	**4A110**	53	
			1.77	II	5440	*(24200)*				1.77	II	5570	*(24800)*	3	**4A115**	53	
			1.84	II	5440	*(24200)*				1.84	II	5570	*(24800)*	3	**4A120**	53	
			2.30	III	8280	*(36800)*				2.30	III	7900	*(35200)*	3	**4B120**	53	
			2.69	III	8280	*(36800)*				2.69	III	7900	*(35200)*	3	**4B125**	53	
24.4	7040	*(795)*	1.12	I	5210	*(23200)*	29.4	5830	*(659)*	1.12	I	5530	*(24600)*	3	**4A105**	60	
			1.45	II	5210	*(23200)*				1.45	II	5530	*(24600)*	3	**4A110**	60	
			1.62	II	5210	*(23200)*				1.62	II	5530	*(24600)*	3	**4A115**	60	
			2.22	III	8530	*(38000)*				2.30	III	8150	*(36300)*	3	**4B120**	60	
			2.57	III	8530	*(38000)*				2.57	III	8150	*(36300)*	3	**4B125**	60	
21.6	7950	*(898)*	1.04	I	4920	*(21900)*	26.0	6580	*(744)*	1.06	I	5340	*(23800)*	3	**4A105**	67	
			1.24	I	4920	*(21900)*				1.24	I	5340	*(23800)*	3	**4A110**	67	
			1.44	II	4920	*(21900)*				1.44	II	5340	*(23800)*	3	**4A120**	67	
			1.80	II	8780	*(39100)*				1.80	II	8400	*(37400)*	3	**4B120**	67	
			2.18	III	8780	*(39100)*				2.22	III	8400	*(37400)*	3	**4B125**	67	
			2.86	III	8780	*(39100)*				2.86	III	8400	*(37400)*	3	**4B140**	67	
19.7	8690	*(982)*	1.04	I	4650	*(20700)*	23.8	7200	*(814)*	1.06	I	5170	*(23000)*	3	**4A105**	74	
			1.31	I	4650	*(20700)*				1.31	I	5170	*(23000)*	3	**4A115**	74	
			2.18	III	8960	*(39900)*				2.22	III	8580	*(38200)*	3	**4B125**	74	
			2.62	III	8960	*(39900)*				2.62	III	8580	*(38200)*	3	**4B140**	74	

Notes: [1] For Y4 Double Reductions (4XXXDX) refer to the above table; for Y4 single reduction refer to tables on pages 2.91-2.130.
[2] Variable Frequency Drive (VFD) notes (see page 2.8 for Constant Torque Speed Ranges):
All 1HP+ motors require EP suffix in model number and can be used with a VFD, unless noted.

Standard Mounting Selection Tables

3 HP (2.2 kW)

Standard Mounting Positions:

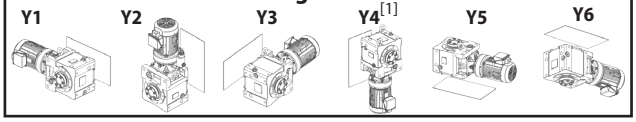

Dimension Pages:

Single Reduction	2.132-2.143
Single Reduction,Y2	2.144
Double Reduction	2.146-2.161
Double Reduction, Y2	2.162

Frequency	50 Hz	60 Hz
Input Speed	1450 RPM	1750 RPM
Number of Poles	4	

50Hz							60 Hz						Selection			
Output Speed (RPM)	Output Torque		Service Factor		Solid Shaft Overhung Load		Output Speed (RPM)	Output Torque		Service Factor		Solid Shaft Overhung Load		Base			VFD[2]
	in•lbs	(N•m)	SF	AGMA Class	lbs	(N)		in•lbs	(N•m)	SF	AGMA Class	lbs	(N)	Motor Power Code	Frame Size	Ratio	
18.1	9460	(1070)	0.87	-	4310	(19200)	21.9	7840	(886)	0.87	-	4960	(22100)	3	**4A110**	80	
			1.01	I	4310	(19200)				1.01	I	4960	(22100)	3	**4A115**	80	
			1.21	I	4310	(19200)				1.21	I	4960	(22100)	3	**4A120**	80	
			1.40	II	9140	(40600)				1.40	II	8750	(38900)	3	**4B120**	80	
			1.80	II	9140	(40600)				1.80	II	8750	(38900)	3	**4B125**	80	
			2.40	III	9140	(40600)				2.40	III	8750	(38900)	3	**4B140**	80	
16.6	10300	(1170)	0.87	-	3850	(17100)	20.0	8570	(969)	0.87	-	4690	(20900)	3	**4A110**	88	
			1.01	I	3850	(17100)				1.01	I	4690	(20900)	3	**4A115**	88	
			1.10	I	3850	(17100)				1.10	I	4690	(20900)	3	**4A120**	88	
			1.40	II	9320	(41400)				1.40	II	8940	(39800)	3	**4B120**	88	
			1.80	II	9320	(41400)				1.80	II	8940	(39800)	3	**4B125**	88	
			2.20	III	9320	(41400)				2.20	III	8940	(39800)	3	**4B140**	88	
14.3	12000	(1360)	0.95	-	2610	(11600)	17.2	9940	(1120)	0.95	-	4070	(18100)	3	**4A115**	102	
			1.30	I	9050	(40300)				1.36	I	9240	(41100)	3	**4B120**	102	
			1.58	II	9050	(40300)				1.71	II	9240	(41100)	3	**4B125**	102	
			1.90	II	9050	(40300)				1.90	II	9240	(41100)	3	**4B140**	102	
			2.70	III	13900	(61600)				2.70	III	13200	(58800)	3	**4C140**	102	
12.9	13200	(1500)	1.08	I	8820	(39200)	15.6	11000	(1240)	1.13	I	9220	(41000)	3	**4B120**	112	
			1.31	I	8820	(39200)				1.45	II	9220	(41000)	3	**4B125**	112	
			1.72	II	8820	(39200)				1.72	II	9220	(41000)	3	**4B140**	112	
			2.84	III	14200	(63100)				3.42	III	13600	(60300)	3	**4C145**	112	
11.8	14500	(1640)	1.08	I	8560	(38100)	14.3	12000	(1360)	1.13	I	9050	(40300)	3	**4B120**	123	
			1.31	I	8560	(38100)				1.45	II	9050	(40300)	3	**4B125**	123	
			1.57	II	8560	(38100)				1.57	II	9050	(40300)	3	**4B140**	123	
			2.37	III	14500	(64500)				2.37	III	13900	(61600)	3	**4C140**	123	
			2.84	III	14500	(64500)				3.14	III	13900	(61600)	3	**4C145**	123	
9.63	17800	(2010)	1.06	I	7690	(34200)	11.6	14700	(1670)	1.08	I	8500	(37800)	3	**4B125**	151	
			1.28	I	7690	(34200)				1.28	I	8500	(37800)	3	**4B140**	151	
			1.79	II	15200	(67600)				1.79	II	14600	(64700)	3	**4C140**	151	
			2.12	III	15200	(67600)				2.45	III	14600	(64700)	3	**4C145**	151	
			2.49	III	15200	(67600)				2.56	III	14600	(64700)	3	**4C160**	151	
			2.93	III	21700	(96400)				3.39	III	21800	(97000)	3	**4D160**	151	
8.12	21100	(2380)	0.90	-	6500	(28900)	9.80	17500	(1980)	1.04	I	7790	(34600)	3	**4B125**	179	
			1.08	I	6500	(28900)				1.08	I	7790	(34600)	3	**4B140**	179	
			1.56	II	15000	(66500)				1.56	II	15100	(67300)	3	**4C140**	179	
			1.68	II	15000	(66500)				1.92	II	15100	(67300)	3	**4C145**	179	
			2.10	III	15000	(66500)				2.16	III	15100	(67300)	3	**4C160**	179	
			2.99	III	21500	(95600)				3.42	III	21700	(96500)	3	**4D165**	179	

Notes: [1] For Y4 Double Reductions (4XXXDX) refer to the above table; for Y4 single reduction refer to tables on pages 2.91-2.130..
[2] Variable Frequency Drive (VFD) notes (see page 2.8 for Constant Torque Speed Ranges):
All 1HP+ motors require EP suffix in model number and can be used with a VFD, unless noted.

Standard Mounting Selection Tables

3 HP (2.2 kW)

Standard Mounting Positions:

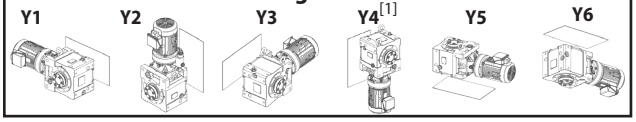

Dimension Pages:

Single Reduction	2.132-2.143
Single Reduction,Y2	2.144
Double Reduction	2.146-2.161
Double Reduction, Y2	2.162

Frequency	50 Hz	60 Hz
Input Speed	1450 RPM	1750 RPM
Number of Poles	4	

50Hz							60 Hz						Selection			
Output Speed (RPM)	Output Torque		Service Factor		Solid Shaft Overhung Load		Output Speed (RPM)	Output Torque		Service Factor		Solid Shaft Overhung Load		Base			VFD[2]
	in•lbs	*(N•m)*	SF	AGMA Class	lbs	*(N)*		in•lbs	*(N•m)*	SF	AGMA Class	lbs	*(N)*	Motor Power Code	Frame Size	Ratio	
7.02	24400	*(2760)*	0.93	-	4730	*(21000)*	8.47	20200	*(2290)*	0.93	-	6850	*(30500)*	3	**4B140**	207	
			1.35	I	14500	*(64600)*				1.35	I	15100	*(67000)*	3	**4C140**	207	
			1.45	II	14500	*(64600)*				1.66	II	15100	*(67000)*	3	**4C145**	207	
			1.82	II	14500	*(64600)*				1.86	II	15100	*(67000)*	3	**4C160**	207	
			2.01	III	21300	*(94700)*				2.01	III	21500	*(95900)*	3	**4D160**	207	
			2.59	III	21300	*(94700)*				2.61	III	21500	*(95900)*	3	**4D165**	207	
5.84	29400	*(3320)*	1.10	I	13700	*(61100)*	7.04	24300	*(2750)*	1.10	I	14500	*(64700)*	3	**4C140**	249	
			1.19	I	13700	*(61100)*				1.38	I	14500	*(64700)*	3	**4C145**	249	
			1.51	II	13700	*(61100)*				1.55	II	14500	*(64700)*	3	**4C160**	249	
			2.15	III	20900	*(93000)*				2.57	III	21300	*(94700)*	3	**4D165**	249	
4.76	36000	*(4070)*	0.90	-	12400	*(55000)*	5.75	29800	*(3370)*	0.90	-	13700	*(60800)*	3	**4C140**	305	
			0.98	-	12400	*(55000)*				1.13	I	13700	*(60800)*	3	**4C145**	305	
			1.23	I	12400	*(55000)*				1.26	I	13700	*(60800)*	3	**4C160**	305	
			1.47	II	20300	*(90200)*				1.58	II	20900	*(92800)*	3	**4D160**	305	
			1.71	II	20300	*(90200)*				1.77	II	20900	*(92800)*	3	**4D165**	305	
3.98	40800	*(4610)*	1.01	I	10300	*(46000)*	4.81	33800	*(3820)*	1.22	I	12500	*(55400)*	3	**4C14DC**	364	
			1.11	I	10300	*(46000)*				1.34	I	12500	*(55400)*	3	**4C16DB**	364	
			1.89	II	19400	*(86400)*				2.28	III	20300	*(90300)*	3	**4D17DC**	364	
			2.32	III	21700	*(96700)*				2.80	III	22100	*(98300)*	3	**4E17DC**	364	
			2.51	III	21700	*(96700)*				3.03	III	22100	*(98300)*	3	**4E18DB**	364	
3.42	47500	*(5370)*	0.82	-	7250	*(32200)*	4.13	39400	*(4450)*	0.99	-	10900	*(48300)*	3	**4C14DC**	424	
			0.96	-	7250	*(32200)*				1.16	I	10900	*(48300)*	3	**4C16DB**	424	
			1.33	I	18400	*(81700)*				1.45	II	19600	*(87300)*	3	**4D16DB**	424	
			1.62	II	18400	*(81700)*				1.96	II	19600	*(87300)*	3	**4D17DC**	424	
			2.00	III	21400	*(95200)*				2.41	III	21800	*(97000)*	3	**4E17DC**	424	
			2.16	III	21400	*(95200)*				2.61	III	21800	*(97000)*	3	**4E18DB**	424	
2.90	56200	*(6350)*	1.13	I	16700	*(74100)*	3.50	46500	*(5260)*	1.36	I	18500	*(82500)*	3	**4D16DB**	501	
			1.37	I	16700	*(74100)*				1.45	II	18500	*(82500)*	3	**4D17DB**	501	
			1.45	II	21000	*(93200)*				1.45	II	21400	*(95400)*	3	**4E17DB**	501	
			1.69	II	21000	*(93200)*				2.04	III	21400	*(95400)*	3	**4E17DC**	501	
			1.83	II	21000	*(93200)*				2.21	III	21400	*(95400)*	3	**4E18DB**	501	
			2.63	III	29700	*(132000)*				3.17	III	30200	*(134000)*	3	**4F18DB**	501	
			2.74	III	29700	*(132000)*				3.31	III	30200	*(134000)*	3	**4F19DB**	501	

Notes: [1] For Y4 Double Reductions (4XXXDX) refer to the above table; for Y4 single reduction refer to tables on pages 2.91-2.130.
[2] Variable Frequency Drive (VFD) notes (see page 2.8 for Constant Torque Speed Ranges):
All 1HP+ motors require EP suffix in model number and can be used with a VFD, unless noted.

Standard Mounting Selection Tables

3 HP (2.2 kW)

Standard Mounting Positions:

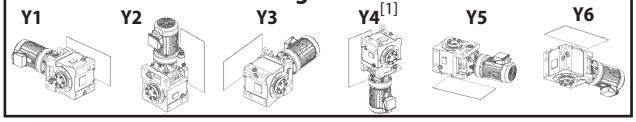

Dimension Pages:

Single Reduction	2.132-2.143
Single Reduction,Y2	2.144
Double Reduction	2.146-2.161
Double Reduction, Y2	2.162

Frequency	50 Hz	60 Hz
Input Speed	1450 RPM	1750 RPM
Number of Poles	4	

50Hz						60 Hz						Selection			
Output Speed (RPM)	Output Torque		Service Factor		Solid Shaft Overhung Load		Output Speed (RPM)	Output Torque		Service Factor		Solid Shaft Overhung Load		Base			VFD[2]
	in•lbs	(N•m)	SF	AGMA Class	lbs	(N)		in•lbs	(N•m)	SF	AGMA Class	lbs	(N)	Motor Power Code	Frame Size	Ratio	
2.51	64800	(7320)	0.98	-	14400	(64100)	3.03	53700	(6070)	1.18	I	17200	(76500)	3	**4D16DB**	578	
			1.19	I	14400	(64100)				1.44	II	17200	(76500)	3	**4D17DB**	578	
			1.45	II	20500	(91300)				1.45	II	21100	(93800)	3	**4E17DB**	578	
			1.58	II	20500	(91300)				1.91	II	21100	(93800)	3	**4E18DB**	578	
			2.29	III	29400	(131000)				2.76	III	29800	(133000)	3	**4F18DB**	578	
			2.38	III	29400	(131000)				2.87	III	29800	(133000)	3	**4F19DB**	578	
2.12	76600	(8650)	0.83	-	9800	(43600)	2.56	63500	(7170)	1.00	I	14800	(65900)	3	**4D16DB**	683	
			1.01	I	9800	(43600)				1.22	I	14800	(65900)	3	**4D17DB**	683	
			1.24	I	19900	(88600)				1.45	II	20600	(91600)	3	**4E17DB**	683	
			1.34	I	19900	(88600)				1.62	II	20600	(91600)	3	**4E18DB**	683	
			1.94	II	28900	(128000)				2.34	III	29400	(131000)	3	**4F18DB**	683	
			2.01	III	28900	(128000)				2.43	III	29400	(131000)	3	**4F19DB**	683	
1.79	90700	(10300)	1.05	I	19200	(85400)	2.16	75200	(8490)	1.26	I	20000	(88900)	3	**4E17DB**	809	
			1.13	I	19200	(85400)				1.37	I	20000	(88900)	3	**4E18DA**	809	
			1.45	II	28200	(126000)				1.45	II	28900	(129000)	3	**4F18DA**	809	
			1.66	II	28200	(126000)				2.00	III	28900	(129000)	3	**4F18DB**	809	
			1.70	II	28200	(126000)				2.05	III	28900	(129000)	3	**4F19DA**	809	
1.52	107000	(12100)	0.88	-	15600	(69300)	1.83	88800	(10000)	1.07	I	19300	(85900)	3	**4E17DB**	956	
			0.96	-	15600	(69300)				1.16	I	19300	(85900)	3	**4E18DA**	956	
			1.40	II	27500	(122000)				1.45	II	28300	(126000)	3	**4F18DA**	956	
			1.40	II	27500	(122000)				1.70	II	28300	(126000)	3	**4F18DB**	956	
			1.44	II	27500	(122000)				1.73	II	28300	(126000)	3	**4F19DA**	956	
1.30	125000	(14200)	0.82	-	6260	(27800)	1.57	104000	(11700)	0.99	-	16700	(74100)	3	**4E18DA**	1117	
			1.20	I	26800	(119000)				1.45	II	27700	(123000)	3	**4F18DA**	1117	
			1.20	I	26800	(119000)				1.45	II	27700	(123000)	3	**4F18DB**	1117	
			1.23	I	26800	(119000)				1.48	II	27700	(123000)	3	**4F19DA**	1117	
1.10	148000	(16700)	1.02	I	25800	(115000)	1.33	123000	(13900)	1.23	I	26900	(120000)	3	**4F18DA**	1320	
			1.04	I	25800	(115000)				1.26	I	26900	(120000)	3	**4F19DA**	1320	
0.876	186000	(21000)	0.81	-	20300	(90200)	1.06	154000	(17400)	0.98	-	25500	(113000)	3	**4F18DA**	1656	
			0.83	-	20300	(90200)				1.00	I	25500	(113000)	3	**4F19DA**	1656	

Sold & Serviced By:
ELECTROMATE
Toll Free Phone (877) SERVO98
www.electromate.com
sales@electromate.com

Notes: [1] For Y4 Double Reductions (4XXXDX) refer to the above table; for Y4 single reduction refer to tables on pages 2.91-2.130..
[2] Variable Frequency Drive (VFD) notes (see page 2.8 for Constant Torque Speed Ranges):
All 1HP+ motors require EP suffix in model number and can be used with a VFD, unless noted.

Standard Mounting Selection Tables

5 HP (3.7 kW)

Standard Mounting Positions:

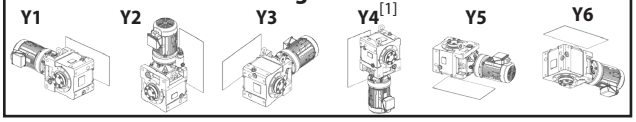

Dimension Pages:

Single Reduction	2.132-2.143
Single Reduction,Y2	2.144
Double Reduction	2.146-2.161
Double Reduction, Y2	2.162

Frequency	50 Hz	60 Hz
Input Speed	1450 RPM	1750 RPM
Number of Poles	4	

50Hz							60 Hz							Selection			
Output Speed (RPM)	Output Torque		Service Factor		Solid Shaft Overhung Load		Output Speed (RPM)	Output Torque		Service Factor		Solid Shaft Overhung Load		Base			VFD[2]
	in•lbs	(N•m)	SF	AGMA Class	lbs	(N)		in•lbs	(N•m)	SF	AGMA Class	lbs	(N)	Motor Power Code	Frame Size	Ratio	
138	2090	(236)	2.59	III	3810	(16900)	167	1730	(195)	2.59	III	3630	(16200)	5	**4A120**	11	
			2.98	III	3810	(16900)				2.98	III	3630	(16200)	5	**4A125**	11	
113	2550	(288)	2.59	III	4000	(17800)	137	2110	(238)	2.59	III	3820	(17000)	5	**4A120**	13	
			2.98	III	4000	(17800)				2.98	III	3820	(17000)	5	**4A125**	13	
104	2780	(315)	2.59	III	4080	(18200)	125	2310	(261)	2.59	III	3900	(17400)	5	**4A120**	14	
			2.98	III	4080	(18200)				2.98	III	3900	(17400)	5	**4A125**	14	
90.6	3180	(359)	2.59	III	4190	(18600)	109	2640	(298)	2.59	III	4010	(17800)	5	**4A120**	16	
			2.98	III	4190	(18600)				2.98	III	4010	(17800)	5	**4A125**	16	
82.9	3480	(393)	2.59	III	4280	(19000)	100.0	2880	(326)	2.59	III	4100	(18200)	5	**4A120**	18	
			2.98	III	4280	(19000)				2.98	III	4100	(18200)	5	**4A125**	18	
69.0	4180	(472)	1.06	I	4470	(19900)	83.3	3460	(391)	1.06	I	4290	(19100)	5	**4A115**	21	
			1.77	II	4470	(19900)				1.77	II	4290	(19100)	5	**4A120**	21	
			2.03	III	4470	(19900)				2.03	III	4290	(19100)	5	**4A125**	21	
			2.73	III	4470	(19900)				2.73	III	4290	(19100)	5	**4A140**	21	
64.7	4450	(503)	1.77	II	4530	(20100)	78.1	3690	(417)	1.77	II	4350	(19400)	5	**4A120**	22	
			2.03	III	4530	(20100)				2.03	III	4350	(19400)	5	**4A125**	22	
			2.56	III	4530	(20100)				2.56	III	4350	(19400)	5	**4A140**	22	
59.2	4870	(550)	1.77	II	4610	(20500)	71.4	4040	(456)	1.77	II	4440	(19700)	5	**4A120**	25	
			2.03	III	4610	(20500)				2.03	III	4440	(19700)	5	**4A125**	25	
			2.34	III	4610	(20500)				2.34	III	4440	(19700)	5	**4A140**	25	
51.8	5570	(629)	1.06	I	4730	(21100)	62.5	4610	(521)	1.06	I	4560	(20300)	5	**4A115**	28	
			1.77	II	4730	(21100)				1.77	II	4560	(20300)	5	**4A120**	28	
			2.03	III	4730	(21100)				2.03	III	4560	(20300)	5	**4A125**	28	
41.2	7000	(791)	1.06	I	4930	(21900)	49.7	5800	(655)	1.06	I	4770	(21200)	5	**4A115**	35	
			1.37	I	4930	(21900)				1.37	I	4770	(21200)	5	**4A120**	35	
			1.60	II	4930	(21900)				1.60	II	4770	(21200)	5	**4A125**	35	
			1.63	II	4930	(21900)				1.63	II	4770	(21200)	5	**4A140**	35	
			3.25	III	7180	(32000)				3.25	III	6880	(30600)	5	**4B140**	35	
37.7	7660	(865)	1.06	I	5000	(22200)	45.5	6340	(717)	1.06	I	4850	(21600)	5	**4A115**	39	
			1.37	I	5000	(22200)				1.37	I	4850	(21600)	5	**4A120**	39	
			1.49	II	5000	(22200)				1.49	II	4850	(21600)	5	**4A125**	39	
			1.60	II	7330	(32600)				1.60	II	7020	(31200)	5	**4B125**	39	
			2.97	III	7330	(32600)				2.97	III	7020	(31200)	5	**4B140**	39	
31.9	9050	(1020)	1.05	I	4500	(20000)	38.5	7500	(847)	1.05	I	4980	(22200)	5	**4A115**	46	
			1.26	I	4500	(20000)				1.26	I	4980	(22200)	5	**4A120**	46	
			1.37	I	7600	(33800)				1.37	I	7300	(32500)	5	**4B120**	46	
			1.60	II	7600	(33800)				1.60	II	7300	(32500)	5	**4B125**	46	
			2.51	III	7600	(33800)				2.51	III	7300	(32500)	5	**4B140**	46	

Notes: [1] For Y4 Double Reductions (4XXXDX) refer to the above table; for Y4 single reduction refer to tables on pages 2.91-2.130.
[2] Variable Frequency Drive (VFD) notes (see page 2.8 for Constant Torque Speed Ranges):
All 1HP+ motors require EP suffix in model number and can be used with a VFD, unless noted.

Standard Mounting Selection Tables

5 HP (3.7 kW)

Standard Mounting Positions:

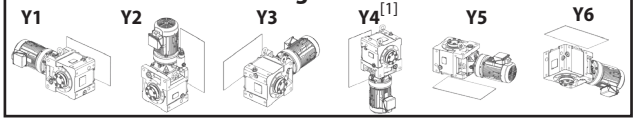

Dimension Pages:

Single Reduction	2.132-2.143
Single Reduction,Y2	2.144
Double Reduction	2.146-2.161
Double Reduction, Y2	2.162

Frequency	50 Hz	60 Hz
Input Speed	1450 RPM	1750 RPM
Number of Poles	4	

50Hz							60 Hz							Selection			
Output Speed (RPM)	Output Torque		Service Factor		Solid Shaft Overhung Load		Output Speed (RPM)	Output Torque		Service Factor		Solid Shaft Overhung Load		Base			VFD[2]
	in•lbs	(N•m)	SF	AGMA Class	lbs	(N)		in•lbs	(N•m)	SF	AGMA Class	lbs	(N)	Motor Power Code	Frame Size	Ratio	
27.6	10400	(1180)	1.05	I	3790	(16900)	33.3	8650	(977)	1.05	I	4660	(20700)	5	**4A115**	53	
			1.09	I	3790	(16900)				1.09	I	4660	(20700)	5	**4A120**	53	
			1.37	I	7820	(34800)				1.37	I	7530	(33500)	5	**4B120**	53	
			1.60	II	7820	(34800)				1.60	II	7530	(33500)	5	**4B125**	53	
			2.18	III	7820	(34800)				2.18	III	7530	(33500)	5	**4B140**	53	
24.4	11800	(1340)	0.96	-	2780	(12300)	29.4	9800	(1110)	0.96	-	4140	(18400)	5	**4A115**	60	
			1.32	I	8020	(35700)				1.37	I	7730	(34400)	5	**4B120**	60	
			1.53	II	8020	(35700)				1.53	II	7730	(34400)	5	**4B125**	60	
			1.92	II	8020	(35700)				1.92	II	7730	(34400)	5	**4B140**	60	
			2.73	III	11700	(51800)				2.73	III	11100	(49600)	5	**4C140**	60	
21.6	13400	(1510)	1.07	I	8200	(36500)	26.0	11100	(1250)	1.07	I	7910	(35200)	5	**4B120**	67	
			1.30	I	8200	(36500)				1.32	I	7910	(35200)	5	**4B125**	67	
			1.70	II	8200	(36500)				1.70	II	7910	(35200)	5	**4B140**	67	
			2.34	III	12000	(53300)				2.34	III	11500	(51000)	5	**4C140**	67	
			2.56	III	12000	(53300)				2.96	III	11500	(51000)	5	**4C145**	67	
19.7	14600	(1650)	1.07	I	8320	(37000)	23.8	12100	(1370)	1.07	I	8050	(35800)	5	**4B120**	74	
			1.30	I	8320	(37000)				1.32	I	8050	(35800)	5	**4B125**	74	
			1.56	II	8320	(37000)				1.56	II	8050	(35800)	5	**4B140**	74	
			2.34	III	12200	(54400)				2.34	III	11700	(52100)	5	**4C140**	74	
			2.56	III	12200	(54400)				2.96	III	11700	(52100)	5	**4C145**	74	
18.1	15900	(1800)	1.07	I	8220	(36600)	21.9	13200	(1490)	1.07	I	8180	(36400)	5	**4B125**	80	
			1.43	II	8220	(36600)				1.43	II	8180	(36400)	5	**4B140**	80	
			1.86	II	12500	(55400)				1.86	II	11900	(53100)	5	**4C140**	80	
			2.14	III	12500	(55400)				2.14	III	11900	(53100)	5	**4C145**	80	
			2.66	III	12500	(55400)				2.66	III	11900	(53100)	5	**4C160**	80	
			2.86	III	12500	(55400)				2.86	III	11900	(53100)	5	**4C165**	80	
16.6	17400	(1970)	1.07	I	7810	(34700)	20.0	14400	(1630)	1.07	I	8310	(36900)	5	**4B125**	88	
			1.31	I	7810	(34700)				1.31	I	8310	(36900)	5	**4B140**	88	
			1.86	II	12700	(56500)				1.86	II	12200	(54200)	5	**4C140**	88	
			2.14	III	12700	(56500)				2.14	III	12200	(54200)	5	**4C145**	88	
			2.55	III	12700	(56500)				2.61	III	12200	(54200)	5	**4C160**	88	
			2.66	III	19300	(85800)				2.66	III	18400	(81900)	5	**4D160**	88	
14.3	20200	(2280)	0.94	-	6870	(30600)	17.2	16700	(1890)	1.02	I	8000	(35600)	5	**4B125**	102	
			1.13	I	6870	(30600)				1.13	I	8000	(35600)	5	**4B140**	102	
			1.61	II	13100	(58200)				1.61	II	12600	(56000)	5	**4C140**	102	
			2.04	III	13100	(58200)				2.04	III	12600	(56000)	5	**4C145**	102	
			2.20	III	13100	(58200)				2.25	III	12600	(56000)	5	**4C160**	102	
			2.58	III	20000	(89000)				2.84	III	19100	(85000)	5	**4D160**	102	

Notes: [1] For Y4 Double Reductions (4XXXDX) refer to the above table; for Y4 single reduction refer to tables on pages 2.91-2.130..
[2] Variable Frequency Drive (VFD) notes (see page 2.8 for Constant Torque Speed Ranges):
All 1HP+ motors require EP suffix in model number and can be used with a VFD, unless noted.

Standard Mounting Selection Tables

5 HP (3.7 kW)

Standard Mounting Positions:

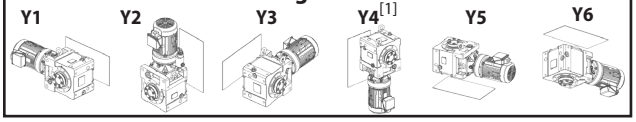

Dimension Pages:

Single Reduction	2.132-2.143
Single Reduction,Y2	2.144
Double Reduction	2.146-2.161
Double Reduction, Y2	2.162

Frequency	50 Hz	60 Hz
Input Speed	1450 RPM	1750 RPM
Number of Poles	4	

50Hz							60 Hz							Selection			
Output Speed (RPM)	Output Torque		Service Factor		Solid Shaft Overhung Load		Output Speed (RPM)	Output Torque		Service Factor		Solid Shaft Overhung Load		Base			VFD[2]
	in•lbs	(N•m)	SF	AGMA Class	lbs	(N)		in•lbs	(N•m)	SF	AGMA Class	lbs	(N)	Motor Power Code	Frame Size	Ratio	
12.9	22300	(2520)	1.02	I	5960	(26500)	15.6	18500	(2090)	1.02	I	7490	(33300)	5	**4B140**	112	
			1.41	II	13300	(59300)				1.41	II	12800	(57100)	5	**4C140**	112	
			1.69	II	13300	(59300)				2.04	III	12800	(57100)	5	**4C145**	112	
			2.04	III	13300	(59300)				2.04	III	12800	(57100)	5	**4C160**	112	
			2.17	III	20500	(91200)				2.61	III	19600	(87100)	5	**4D160**	112	
			2.59	III	20500	(91200)				3.08	III	19600	(87100)	5	**4D165**	112	
11.8	24400	(2750)	0.93	-	4760	(21200)	14.3	20200	(2280)	0.93	-	6870	(30600)	5	**4B140**	123	
			1.41	II	13600	(60300)				1.41	II	13100	(58200)	5	**4C140**	123	
			1.69	II	13600	(60300)				1.87	II	13100	(58200)	5	**4C145**	123	
			1.82	II	13600	(60300)				1.87	II	13100	(58200)	5	**4C160**	123	
			2.17	III	20900	(93100)				2.61	III	20000	(89000)	5	**4D160**	123	
			2.59	III	20900	(93100)				3.08	III	20000	(89000)	5	**4D165**	123	
9.63	29900	(3380)	1.06	I	13600	(60700)	11.6	24800	(2800)	1.06	I	13600	(60500)	5	**4C140**	151	
			1.26	I	13600	(60700)				1.46	II	13600	(60500)	5	**4C145**	151	
			1.48	II	13600	(60700)				1.52	II	13600	(60500)	5	**4C160**	151	
			1.74	II	20900	(92800)				2.01	III	21000	(93500)	5	**4D160**	151	
			2.11	III	20900	(92800)				2.14	III	21000	(93500)	5	**4D165**	151	
			2.45	III	20900	(92800)				2.58	III	21000	(93500)	5	**4D170**	151	
			2.58	III	20900	(92800)				2.58	III	21000	(93500)	5	**4D175**	151	
			2.58	III	20900	(92800)				3.11	III	21000	(93500)	5	**4D180**	151	(-)
8.12	35500	(4010)	1.00	I	12500	(55600)	9.80	29400	(3320)	1.14	I	13700	(61100)	5	**4C145**	179	
			1.25	I	12500	(55600)				1.28	I	13700	(61100)	5	**4C160**	179	
			1.49	II	20300	(90400)				1.55	II	20900	(93000)	5	**4D160**	179	
			1.78	II	20300	(90400)				2.04	III	20900	(93000)	5	**4D165**	179	
			2.07	III	20300	(90400)				2.17	III	20900	(93000)	5	**4D170**	179	
			2.17	III	20300	(90400)				2.17	III	20900	(93000)	5	**4D175**	179	
			2.17	III	20300	(90400)				2.62	III	20900	(93000)	5	**4D180**	179	(-)
			2.67	III	22000	(97900)				2.89	III	22300	(99300)	5	**4E175**	179	
			2.89	III	22000	(97900)				3.24	III	22300	(99300)	5	**4E180**	179	(-)
			2.89	III	22000	(97900)				3.49	III	22300	(99300)	5	**4E185**	179	(-)

Sold & Serviced By:
ELECTROMATE
Toll Free Phone (877) SERVO98
www.electromate.com
sales@electromate.com

Notes: [1] For Y4 Double Reductions (4XXXDX) refer to the above table; for Y4 single reduction refer to tables on pages 2.91-2.130.
[2] Variable Frequency Drive (VFD) notes (see page 2.8 for Constant Torque Speed Ranges):
All 1HP+ motors require EP suffix in model number and can be used with a VFD, unless noted.
(-) = For Inverter Operation, starting condition may require ambient temperature of 5° C or higher.

Standard Mounting Selection Tables

5 HP (3.7 kW)

Standard Mounting Positions:

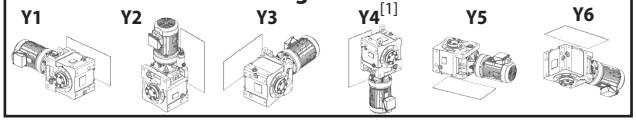

Dimension Pages:

Single Reduction	2.132-2.143
Single Reduction,Y2	2.144
Double Reduction	2.146-2.161
Double Reduction, Y2	2.162

Frequency	50 Hz	60 Hz
Input Speed	1450 RPM	1750 RPM
Number of Poles	4	

50Hz							60 Hz							Selection			
Output Speed (RPM)	Output Torque		Service Factor		Solid Shaft Overhung Load		Output Speed (RPM)	Output Torque		Service Factor		Solid Shaft Overhung Load		Base			VFD[2]
	in•lbs	(N•m)	SF	AGMA Class	lbs	(N)		in•lbs	(N•m)	SF	AGMA Class	lbs	(N)	Motor Power Code	Frame Size	Ratio	
7.02	41100	(4640)	0.86	-	11000	(48900)	8.47	34000	(3840)	0.99	-	12800	(57100)	5	**4C145**	207	
			1.08	I	11000	(48900)				1.11	I	12800	(57100)	5	**4C160**	207	
			1.19	I	19700	(87500)				1.19	I	20500	(91100)	5	**4D160**	207	
			1.54	II	19700	(87500)				1.55	II	20500	(91100)	5	**4D165**	207	
			1.79	II	19700	(87500)				1.88	II	20500	(91100)	5	**4D170**	207	
			1.88	II	19700	(87500)				1.88	II	20500	(91100)	5	**4D175**	207	
			1.88	II	19700	(87500)				2.27	III	20500	(91100)	5	**4D180**	207	(-)
			2.24	III	21700	(96600)				2.24	III	22100	(98200)	5	**4E175**	207	
			2.50	III	21700	(96600)				2.64	III	22100	(98200)	5	**4E180**	207	(-)
			2.50	III	21700	(96600)				3.02	III	22100	(98200)	5	**4E185**	207	(-)
			2.64	III	30400	(135000)				2.64	III	30700	(137000)	5	**4F180**	207	(-)
5.84	49400	(5580)	0.90	-	7610	(33900)	7.04	40900	(4630)	0.92	-	11000	(49000)	5	**4C160**	249	
			1.28	I	18500	(82200)				1.53	II	19700	(87600)	5	**4D165**	249	
			1.49	II	18500	(82200)				1.56	II	19700	(87600)	5	**4D170**	249	
			1.56	II	18500	(82200)				1.56	II	19700	(87600)	5	**4D175**	249	
			1.56	II	18500	(82200)				1.88	II	19700	(87600)	5	**4D180**	249	(-)
			1.89	II	21300	(94800)				1.93	II	21700	(96700)	5	**4E175**	249	
			2.08	III	21300	(94800)				2.38	III	21700	(96700)	5	**4E180**	249	(-)
			2.08	III	21300	(94800)				2.51	III	21700	(96700)	5	**4E185**	249	(-)
			2.38	III	30000	(134000)				2.38	III	30400	(135000)	5	**4F180**	249	(-)
			2.65	III	30000	(134000)				2.65	III	30400	(135000)	5	**4F185**	249	(-)
4.76	60600	(6840)	0.87	-	16400	(72800)	5.75	50200	(5670)	0.94	-	18400	(81700)	5	**4D160**	305	
			1.02	I	16400	(72800)				1.05	I	18400	(81700)	5	**4D165**	305	
			1.27	I	16400	(72800)				1.27	I	18400	(81700)	5	**4D175**	305	
			1.27	I	16400	(72800)				1.54	II	18400	(81700)	5	**4D180**	305	(-)
			1.52	II	20700	(92200)				1.52	II	21300	(94600)	5	**4E175**	305	
			1.70	II	20700	(92200)				1.93	II	21300	(94600)	5	**4E180**	305	(-)
			1.70	II	20700	(92200)				2.05	III	21300	(94600)	5	**4E185**	305	(-)
			1.93	II	29600	(131000)				1.93	II	30000	(133000)	5	**4F180**	305	(-)
			2.32	III	29600	(131000)				2.32	III	30000	(133000)	5	**4F185**	305	(-)
			2.63	III	29600	(131000)				3.18	III	30000	(133000)	5	**4F190**	305	(-)
3.98	68700	(7760)	0.92	-	13100	(58500)	4.81	56900	(6430)	1.11	I	16500	(73400)	5	**4D16DC**	364	
			1.12	I	13100	(58500)				1.36	I	16500	(73400)	5	**4D17DC**	364	
			1.38	I	20300	(90400)				1.67	II	20900	(93100)	5	**4E17DC**	364	
			1.49	II	20300	(90400)				1.80	II	20900	(93100)	5	**4E18DB**	364	
			2.15	III	29200	(130000)				2.59	III	29700	(132000)	5	**4F18DB**	364	
			2.24	III	29200	(130000)				2.71	III	29700	(132000)	5	**4F19DB**	364	

Notes: [1] For Y4 Double Reductions (4XXXDX) refer to the above table; for Y4 single reduction refer to tables on pages 2.91-2.130..

[2] Variable Frequency Drive (VFD) notes (see page 2.8 for Constant Torque Speed Ranges):
All 1HP+ motors require EP suffix in model number and can be used with a VFD, unless noted.
(-) = For Inverter Operation, starting condition may require ambient temperature of 5° C or higher.

Standard Mounting Selection Tables

5 HP (3.7 kW)

Standard Mounting Positions:

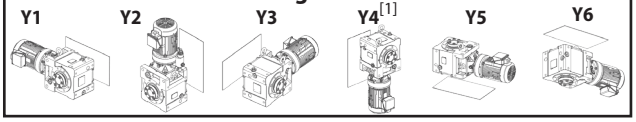

Dimension Pages:

Single Reduction	2.132-2.143
Single Reduction,Y2	2.144
Double Reduction	2.146-2.161
Double Reduction, Y2	2.162

Frequency	50 Hz	60 Hz
Input Speed	1450 RPM	1750 RPM
Number of Poles	4	

50Hz						60 Hz						Selection			
Output Speed (RPM)	Output Torque		Service Factor		Solid Shaft Overhung Load		Output Speed (RPM)	Output Torque		Service Factor		Solid Shaft Overhung Load		Base			VFD[2]
	in•lbs	(N•m)	SF	AGMA Class	lbs	(N)		in•lbs	(N•m)	SF	AGMA Class	lbs	(N)	Motor Power Code	Frame Size	Ratio	
3.42	79900	(9030)	0.97	-	7810	(34700)	4.13	66200	(7480)	1.17	I	14000	(62100)	5	**4D17DC**	424	
			1.19	I	19800	(87900)				1.43	II	20400	(91000)	5	**4E17DC**	424	
			1.28	I	19800	(87900)				1.55	II	20400	(91000)	5	**4E18DB**	424	
			1.81	II	28700	(128000)				2.19	III	29300	(130000)	5	**4F18DB**	424	
			1.93	II	28700	(128000)				2.33	III	29300	(130000)	5	**4F19DB**	424	
2.90	94500	(10700)	1.00	I	19000	(84600)	3.50	78300	(8840)	1.21	I	19800	(88200)	5	**4E17DC**	501	
			1.09	I	19000	(84600)				1.31	I	19800	(88200)	5	**4E18DB**	501	
			1.56	II	28100	(125000)				1.89	II	28800	(128000)	5	**4F18DB**	501	
			1.63	II	28100	(125000)				1.97	II	28800	(128000)	5	**4F19DB**	501	
2.51	109000	(12300)	0.87	-	15000	(66600)	3.03	90300	(10200)	1.05	I	19200	(85500)	5	**4E17DC**	578	
			0.94	-	15000	(66600)				1.14	I	19200	(85500)	5	**4E18DB**	578	
			1.36	I	27500	(122000)				1.64	II	28300	(126000)	5	**4F18DB**	578	
			1.41	II	27500	(122000)				1.71	II	28300	(126000)	5	**4F19DB**	578	
2.12	129000	(14600)	1.15	I	26600	(118000)	2.56	107000	(12100)	1.39	I	27600	(123000)	5	**4F18DB**	683	
			1.20	I	26600	(118000)				1.44	II	27600	(123000)	5	**4F19DA**	683	
1.79	153000	(17200)	0.99	-	25600	(114000)	2.16	126000	(14300)	1.19	I	26700	(119000)	5	**4F18DB**	809	
			1.01	I	25600	(114000)				1.22	I	26700	(119000)	5	**4F19DA**	809	
1.52	180000	(20400)	0.84	-	22300	(99400)	1.83	149000	(16900)	1.01	I	25700	(114000)	5	**4F18DB**	956	
			0.85	-	22300	(99400)				1.03	I	25700	(114000)	5	**4F19DA**	956	

Sold & Serviced By:
ELECTROMATE
Toll Free Phone (877) SERVO98
www.electromate.com
sales@electromate.com

Notes: [1] For Y4 Double Reductions (4XXXDX) refer to the above table; for Y4 single reduction refer to tables on pages 2.91-2.130.
[2] Variable Frequency Drive (VFD) notes (see page 2.8 for Constant Torque Speed Ranges):
All 1HP+ motors require EP suffix in model number and can be used with a VFD, unless noted.

Standard Mounting Selection Tables

7.5 HP (5.5 kW)

Standard Mounting Positions:

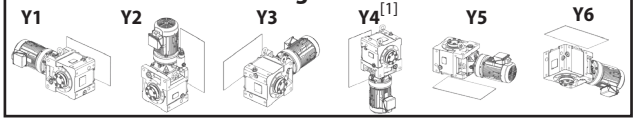

Dimension Pages:

Single Reduction	2.132-2.143
Single Reduction,Y2	2.144
Double Reduction	2.146-2.161
Double Reduction, Y2	2.162

Frequency	50 Hz	60 Hz
Input Speed	1450 RPM	1750 RPM
Number of Poles	4	

50Hz							60 Hz						Selection			
Output Speed (RPM)	Output Torque		Service Factor		Solid Shaft Overhung Load		Output Speed (RPM)	Output Torque		Service Factor		Solid Shaft Overhung Load		Base			VFD[2]
	in•lbs	(N•m)	SF	AGMA Class	lbs	(N)		in•lbs	(N•m)	SF	AGMA Class	lbs	(N)	Motor Power Code	Frame Size	Ratio	
138	3100	(351)	1.75	II	3670	(16300)	167	2570	(291)	1.75	II	3520	(15600)	8	**4A120**	11	
			2.00	III	3670	(16300)				2.00	III	3520	(15600)	8	**4A125**	11	
			3.33	III	3700	(16500)				3.68	III	3550	(15800)	8	**4A145**	11	
113	3780	(428)	1.75	II	3830	(17000)	137	3140	(354)	1.75	II	3680	(16400)	8	**4A120**	13	
			2.00	III	3830	(17000)				2.00	III	3680	(16400)	8	**4A125**	13	
104	4140	(468)	1.75	II	3900	(17300)	125	3430	(387)	1.75	II	3750	(16700)	8	**4A120**	14	
			2.00	III	3900	(17300)				2.00	III	3750	(16700)	8	**4A125**	14	
			2.76	III	3910	(17400)				2.76	III	3760	(16700)	8	**4A140**	14	
90.6	4730	(534)	1.75	II	3980	(17700)	109	3920	(443)	1.75	II	3840	(17100)	8	**4A120**	16	
			2.00	III	3980	(17700)				2.00	III	3840	(17100)	8	**4A125**	16	
			2.41	III	4000	(17800)				2.41	III	3850	(17100)	8	**4A140**	16	
82.9	5170	(584)	1.75	II	4050	(18000)	100.0	4290	(484)	1.75	II	3910	(17400)	8	**4A120**	18	
			2.00	III	4050	(18000)				2.00	III	3910	(17400)	8	**4A125**	18	
			2.21	III	4060	(18100)				2.21	III	3920	(17500)	8	**4A140**	18	
69.0	6210	(701)	1.19	I	4190	(18600)	83.3	5140	(581)	1.19	I	4060	(18100)	8	**4A120**	21	
			1.37	I	4190	(18600)				1.37	I	4060	(18100)	8	**4A125**	21	
			1.84	II	4190	(18600)				1.84	II	4060	(18100)	8	**4A140**	21	
			2.36	III	6130	(27300)				2.36	III	5870	(26100)	8	**4B140**	21	
			2.75	III	6130	(27300)				2.75	III	5870	(26100)	8	**4B145**	21	
64.7	6620	(748)	1.19	I	4230	(18800)	78.1	5490	(620)	1.19	I	4110	(18300)	8	**4A120**	22	
			1.37	I	4230	(18800)				1.37	I	4110	(18300)	8	**4A125**	22	
			1.72	II	4230	(18800)				1.72	II	4110	(18300)	8	**4A140**	22	
			2.36	III	6220	(27700)				2.36	III	5960	(26500)	8	**4B140**	22	
			2.75	III	6220	(27700)				2.75	III	5960	(26500)	8	**4B145**	22	
59.2	7240	(818)	1.19	I	4290	(19100)	71.4	6000	(678)	1.19	I	4170	(18500)	8	**4A120**	25	
			1.37	I	4290	(19100)				1.37	I	4170	(18500)	8	**4A125**	25	
			1.58	II	4290	(19100)				1.58	II	4170	(18500)	8	**4A140**	25	
			2.36	III	6340	(28200)				2.36	III	6080	(27100)	8	**4B140**	25	
			2.75	III	6340	(28200)				2.75	III	6080	(27100)	8	**4B145**	25	
51.8	8280	(935)	1.19	I	4360	(19400)	62.5	6860	(775)	1.19	I	4250	(18900)	8	**4A120**	28	
			1.37	I	4360	(19400)				1.37	I	4250	(18900)	8	**4A125**	28	
			2.36	III	6520	(29000)				2.36	III	6270	(27900)	8	**4B140**	28	
			2.75	III	6520	(29000)				2.75	III	6270	(27900)	8	**4B145**	28	
41.2	10400	(1180)	1.08	I	3810	(17000)	49.7	8620	(974)	1.08	I	4380	(19500)	8	**4A125**	35	
			1.10	I	3810	(17000)				1.10	I	4380	(19500)	8	**4A140**	35	
			2.19	III	6820	(30300)				2.19	III	6570	(29200)	8	**4B140**	35	
			2.36	III	9930	(44200)				2.36	III	9500	(42200)	8	**4C140**	35	
			2.75	III	9930	(44200)				2.75	III	9500	(42200)	8	**4C145**	35	

Notes: [1] For Y4 Double Reductions (4XXXDX) refer to the above table; for Y4 single reduction refer to tables on pages 2.91-2.130..
[2] Variable Frequency Drive (VFD) notes (see page 2.8 for Constant Torque Speed Ranges):
All 1HP+ motors require EP suffix in model number and can be used with a VFD, unless noted.

Standard Mounting Selection Tables

7.5 HP (5.5 kW)

Standard Mounting Positions:

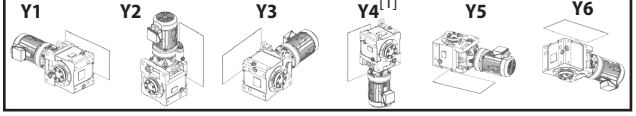

Dimension Pages:

Single Reduction	2.132-2.143
Single Reduction,Y2	2.144
Double Reduction	2.146-2.161
Double Reduction, Y2	2.162

Frequency	50 Hz	60 Hz
Input Speed	1450 RPM	1750 RPM
Number of Poles	4	

50Hz							60 Hz							Selection			
Output Speed (RPM)	Output Torque		Service Factor		Solid Shaft Overhung Load		Output Speed (RPM)	Output Torque		Service Factor		Solid Shaft Overhung Load		Base			VFD[2]
	in•lbs	(N•m)	SF	AGMA Class	lbs	(N)		in•lbs	(N•m)	SF	AGMA Class	lbs	(N)	Motor Power Code	Frame Size	Ratio	
37.7	11400	(1290)	1.00	I	3160	(14000)	45.5	9430	(1070)	1.00	I	4320	(19200)	8	**4A125**	39	
			1.08	I	6930	(30800)				1.08	I	6690	(29800)	8	**4B125**	39	
			2.00	III	6930	(30800)				2.00	III	6690	(29800)	8	**4B140**	39	
			2.36	III	10100	(45100)				2.36	III	9700	(43200)	8	**4C140**	39	
			2.75	III	10100	(45100)				2.75	III	9700	(43200)	8	**4C145**	39	
31.9	13400	(1520)	1.08	I	7120	(31700)	38.5	11100	(1260)	1.08	I	6900	(30700)	8	**4B125**	46	
			1.69	II	7120	(31700)				1.69	II	6900	(30700)	8	**4B140**	46	
			2.36	III	10500	(46800)				2.36	III	10100	(44900)	8	**4C140**	46	
			2.75	III	10500	(46800)				2.75	III	10100	(44900)	8	**4C145**	46	
27.6	15500	(1750)	1.08	I	7280	(32400)	33.3	12900	(1450)	1.08	I	7070	(31500)	8	**4B125**	53	
			1.47	II	7280	(32400)				1.47	II	7070	(31500)	8	**4B140**	53	
			2.18	III	10800	(48200)				2.18	III	10400	(46300)	8	**4C140**	53	
			2.63	III	10800	(48200)				2.65	III	10400	(46300)	8	**4C145**	53	
			2.86	III	10800	(48200)				2.93	III	10400	(46300)	8	**4C160**	53	
24.4	17600	(1990)	1.03	I	7400	(32900)	29.4	14600	(1650)	1.03	I	7210	(32100)	8	**4B125**	60	
			1.29	I	7400	(32900)				1.29	I	7210	(32100)	8	**4B140**	60	
			1.84	II	11100	(49400)				1.84	II	10700	(47600)	8	**4C140**	60	
			2.18	III	11100	(49400)				2.18	III	10700	(47600)	8	**4C145**	60	
			2.38	III	11100	(49400)				2.38	III	10700	(47600)	8	**4C160**	60	
			2.52	III	11100	(49400)				2.59	III	10700	(47600)	8	**4C165**	60	
21.6	19900	(2240)	1.15	I	6990	(31100)	26.0	16500	(1860)	1.15	I	7330	(32600)	8	**4B140**	67	
			1.57	II	11400	(50600)				1.57	II	11000	(48800)	8	**4C140**	67	
			1.72	II	11400	(50600)				1.99	II	11000	(48800)	8	**4C145**	67	
			2.29	III	11400	(50600)				2.29	III	11000	(48800)	8	**4C160**	67	
			2.35	III	17500	(77900)				2.35	III	16700	(74500)	8	**4D160**	67	
			2.91	III	17500	(77900)				2.93	III	16700	(74500)	8	**4D165**	67	
19.7	21700	(2450)	0.87	-	6220	(27700)	23.8	18000	(2030)	0.89	-	7420	(33000)	8	**4B125**	74	
			1.05	I	6220	(27700)				1.05	I	7420	(33000)	8	**4B140**	74	
			1.57	II	11600	(51400)				1.57	II	11200	(49600)	8	**4C140**	74	
			1.72	II	11600	(51400)				1.99	II	11200	(49600)	8	**4C145**	74	
			2.04	III	11600	(51400)				2.09	III	11200	(49600)	8	**4C160**	74	
			2.35	III	17900	(79600)				2.35	III	17100	(76100)	8	**4D160**	74	
			2.91	III	17900	(79600)				2.93	III	17100	(76100)	8	**4D165**	74	

Notes: [1] For Y4 Double Reductions (4XXXDX) refer to the above table; for Y4 single reduction refer to tables on pages 2.91-2.130.
[2] Variable Frequency Drive (VFD) notes (see page 2.8 for Constant Torque Speed Ranges):
All 1HP+ motors require EP suffix in model number and can be used with a VFD, unless noted.

Standard Mounting Selection Tables

7.5 HP (5.5 kW)

Standard Mounting Positions:

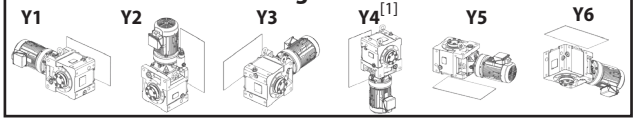

Dimension Pages:

Single Reduction	2.132-2.143
Single Reduction,Y2	2.144
Double Reduction	2.146-2.161
Double Reduction, Y2	2.162

Frequency	50 Hz	60 Hz
Input Speed	1450 RPM	1750 RPM
Number of Poles	4	

50Hz							60 Hz							Selection			
Output Speed (RPM)	Output Torque		Service Factor		Solid Shaft Overhung Load		Output Speed (RPM)	Output Torque		Service Factor		Solid Shaft Overhung Load		Base			VFD[2]
	in•lbs	(N•m)	SF	AGMA Class	lbs	(N)		in•lbs	(N•m)	SF	AGMA Class	lbs	(N)	Motor Power Code	Frame Size	Ratio	
18.1	23600	(2670)	1.25	I	11700	(52100)	21.9	19600	(2210)	1.25	I	11300	(50400)	8	**4C140**	80	
			1.44	II	11700	(52100)				1.44	II	11300	(50400)	8	**4C145**	80	
			1.79	II	11700	(52100)				1.79	II	11300	(50400)	8	**4C160**	80	
			1.92	II	11700	(52100)				1.92	II	11300	(50400)	8	**4C165**	80	
			2.44	III	18200	(81200)				2.75	III	17500	(77700)	8	**4D165**	80	
			2.83	III	18200	(81200)				2.87	III	17500	(77700)	8	**4D170**	80	
16.6	25900	(2920)	0.88	-	3570	(15900)	20.0	21400	(2420)	0.88	-	6350	(28300)	8	**4B140**	88	
			1.25	I	11900	(52900)				1.25	I	11500	(51300)	8	**4C140**	88	
			1.44	II	11900	(52900)				1.44	II	11500	(51300)	8	**4C145**	88	
			1.72	II	11900	(52900)				1.76	II	11500	(51300)	8	**4C160**	88	
			1.79	II	18600	(82800)				1.79	II	17800	(79300)	8	**4D160**	88	
			2.44	III	18600	(82800)				2.75	III	17800	(79300)	8	**4D165**	88	
			2.83	III	18600	(82800)				2.87	III	17800	(79300)	8	**4D170**	88	
			2.98	III	18600	(82800)				2.98	III	17800	(79300)	8	**4D175**	88	
			2.98	III	18600	(82800)				3.60	III	17800	(79300)	8	**4D180**	88	(-)
14.3	30000	(3390)	1.08	I	12200	(54000)	17.2	24900	(2810)	1.08	I	11800	(52600)	8	**4C140**	102	
			1.37	I	12200	(54000)				1.37	I	11800	(52600)	8	**4C145**	102	
			1.48	II	12200	(54000)				1.52	II	11800	(52600)	8	**4C160**	102	
			1.74	II	19200	(85500)				1.91	II	18500	(82100)	8	**4D160**	102	
			2.07	III	19200	(85500)				2.07	III	18500	(82100)	8	**4D165**	102	
			2.45	III	19200	(85500)				2.57	III	18500	(82100)	8	**4D170**	102	
			2.57	III	19200	(85500)				2.57	III	18500	(82100)	8	**4D175**	102	
			2.57	III	19200	(85500)				3.10	III	18500	(82100)	8	**4D180**	102	(-)
			2.90	III	22300	(99100)				2.90	III	22500	(100000)	8	**4E175**	102	
			2.90	III	22300	(99100)				3.50	III	22500	(100000)	8	**4E180**	102	(-)
12.9	33100	(3740)	1.14	I	12300	(54700)	15.6	27400	(3100)	1.37	I	12000	(53300)	8	**4C145**	112	
			1.37	I	12300	(54700)				1.37	I	12000	(53300)	8	**4C160**	112	
			1.46	II	19600	(87300)				1.76	II	18900	(83900)	8	**4D160**	112	
			1.74	II	19600	(87300)				2.07	III	18900	(83900)	8	**4D165**	112	
			2.03	III	19600	(87300)				2.18	III	18900	(83900)	8	**4D170**	112	
			2.33	III	19600	(87300)				2.33	III	18900	(83900)	8	**4D175**	112	
			2.33	III	19600	(87300)				2.81	III	18900	(83900)	8	**4D180**	112	(-)
			2.62	III	22100	(98400)				2.75	III	22400	(99700)	8	**4E175**	112	

Notes: [1] For Y4 Double Reductions (4XXXDX) refer to the above table; for Y4 single reduction refer to tables on pages 2.91-2.130..

[2] Variable Frequency Drive (VFD) notes (see page 2.8 for Constant Torque Speed Ranges):
All 1HP+ motors require EP suffix in model number and can be used with a VFD, unless noted.
(-) = For Inverter Operation, starting condition may require ambient temperature of 5° C or higher.

Standard Mounting Selection Tables

7.5 HP (5.5 kW)

Standard Mounting Positions:

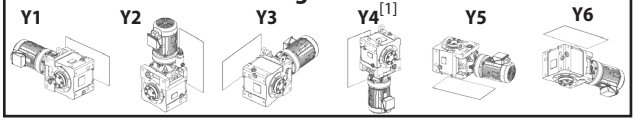

Dimension Pages:

Single Reduction	2.132-2.143
Single Reduction,Y2	2.144
Double Reduction	2.146-2.161
Double Reduction, Y2	2.162

Frequency	50 Hz	60 Hz
Input Speed	1450 RPM	1750 RPM
Number of Poles	4	

50Hz							60 Hz							Selection			
Output Speed (RPM)	Output Torque		Service Factor		Solid Shaft Overhung Load		Output Speed (RPM)	Output Torque		Service Factor		Solid Shaft Overhung Load		Base			VFD[2]
	in•lbs	*(N•m)*	SF	AGMA Class	lbs	*(N)*		in•lbs	*(N•m)*	SF	AGMA Class	lbs	*(N)*	Motor Power Code	Frame Size	Ratio	
11.8	36200	*(4090)*	0.95	-	12300	*(54800)*	14.3	30000	*(3390)*	0.95	-	12200	*(54000)*	8	**4C140**	123	
			1.14	I	12300	*(54800)*				1.26	I	12200	*(54000)*	8	**4C145**	123	
			1.46	II	20000	*(88900)*				1.76	II	19200	*(85500)*	8	**4D160**	123	
			1.74	II	20000	*(88900)*				2.07	III	19200	*(85500)*	8	**4D165**	123	
			2.03	III	20000	*(88900)*				2.13	III	19200	*(85500)*	8	**4D170**	123	
			2.13	III	20000	*(88900)*				2.13	III	19200	*(85500)*	8	**4D175**	123	
			2.13	III	20000	*(88900)*				2.57	III	19200	*(85500)*	8	**4D180**	123	(-)
			2.62	III	22000	*(97700)*				2.75	III	22300	*(99100)*	8	**4E175**	123	
			2.84	III	22000	*(97700)*				3.42	III	22300	*(99100)*	8	**4E180**	123	(-)
			2.84	III	22000	*(97700)*				3.42	III	22300	*(99100)*	8	**4E185**	123	(-)
9.63	44500	*(5030)*	0.85	-	9820	*(43700)*	11.6	36900	*(4160)*	0.98	-	12200	*(54100)*	8	**4C145**	151	
			1.00	I	9820	*(43700)*				1.02	I	12200	*(54100)*	8	**4C160**	151	
			1.17	I	19200	*(85500)*				1.35	I	20100	*(89200)*	8	**4D160**	151	
			1.42	II	19200	*(85500)*				1.44	II	20100	*(89200)*	8	**4D165**	151	
			1.65	II	19200	*(85500)*				1.73	II	20100	*(89200)*	8	**4D170**	151	
			1.73	II	19200	*(85500)*				1.73	II	20100	*(89200)*	8	**4D175**	151	
			1.73	II	19200	*(85500)*				2.09	III	20100	*(89200)*	8	**4D180**	151	(-)
			2.05	III	21600	*(95900)*				2.05	III	21900	*(97600)*	8	**4E175**	151	
			2.31	III	21600	*(95900)*				2.75	III	21900	*(97600)*	8	**4E180**	151	(-)
			2.31	III	21600	*(95900)*				2.79	III	21900	*(97600)*	8	**4E185**	151	(-)
			2.74	III	30200	*(135000)*				2.75	III	30600	*(136000)*	8	**4F180**	151	(-)
8.12	52800	*(5960)*	0.84	-	5440	*(24200)*	9.80	43700	*(4940)*	0.86	-	10100	*(44900)*	8	**4C160**	179	
			1.00	I	17900	*(79700)*				1.05	I	19300	*(86000)*	8	**4D160**	179	
			1.20	I	17900	*(79700)*				1.37	I	19300	*(86000)*	8	**4D165**	179	
			1.39	I	17900	*(79700)*				1.46	II	19300	*(86000)*	8	**4D170**	179	
			1.46	II	17900	*(79700)*				1.46	II	19300	*(86000)*	8	**4D175**	179	
			1.46	II	17900	*(79700)*				1.77	II	19300	*(86000)*	8	**4D180**	179	
			1.79	II	21100	*(94000)*				1.95	II	21600	*(96000)*	8	**4E175**	179	
			1.95	II	21100	*(94000)*				2.18	III	21600	*(96000)*	8	**4E180**	179	
			1.95	II	21100	*(94000)*				2.35	III	21600	*(96000)*	8	**4E185**	179	
			2.18	III	29900	*(133000)*				2.18	III	30300	*(135000)*	8	**4F180**	179	
			2.75	III	29900	*(133000)*				2.75	III	30300	*(135000)*	8	**4F185**	179	

Notes: [1] For Y4 Double Reductions (4XXXDX) refer to the above table; for Y4 single reduction refer to tables on pages 2.91-2.130.

[2] Variable Frequency Drive (VFD) notes (see page 2.8 for Constant Torque Speed Ranges):
All 1HP+ motors require EP suffix in model number and can be used with a VFD, unless noted.
(-) = For Inverter Operation, starting condition may require ambient temperature of 5° C or higher.

Standard Mounting Selection Tables

7.5 HP (5.5 kW)

Standard Mounting Positions:

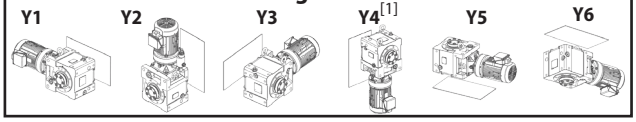

Dimension Pages:

Single Reduction	2.132-2.143
Single Reduction,Y2	2.144
Double Reduction	2.146-2.161
Double Reduction, Y2	2.162

Frequency	50 Hz	60 Hz
Input Speed	1450 RPM	1750 RPM
Number of Poles	4	

50Hz							60 Hz							Selection			
Output Speed (RPM)	Output Torque		Service Factor		Solid Shaft Overhung Load		Output Speed (RPM)	Output Torque		Service Factor		Solid Shaft Overhung Load		Base			VFD[2]
	in•lbs	*(N•m)*	SF	AGMA Class	lbs	*(N)*		in•lbs	*(N•m)*	SF	AGMA Class	lbs	*(N)*	Motor Power Code	Frame Size	Ratio	
7.02	61000	*(6900)*	0.80	-	16300	*(72300)*	8.47	50600	*(5710)*	0.80	-	18300	*(81400)*	8	**4D160**	207	
			1.03	I	16300	*(72300)*				1.05	I	18300	*(81400)*	8	**4D165**	207	
			1.20	I	16300	*(72300)*				1.26	I	18300	*(81400)*	8	**4D170**	207	
			1.26	I	16300	*(72300)*				1.26	I	18300	*(81400)*	8	**4D175**	207	
			1.26	I	16300	*(72300)*				1.53	II	18300	*(81400)*	8	**4D180**	207	
			1.51	II	20700	*(92100)*				1.51	II	21200	*(94500)*	8	**4E175**	207	
			1.68	II	20700	*(92100)*				1.77	II	21200	*(94500)*	8	**4E180**	207	
			1.68	II	20700	*(92100)*				2.03	III	21200	*(94500)*	8	**4E185**	207	
			1.77	II	29500	*(131000)*				1.77	II	30000	*(133000)*	8	**4F180**	207	
			2.18	III	29500	*(131000)*				2.18	III	30000	*(133000)*	8	**4F185**	207	
			2.61	III	29500	*(131000)*				2.78	III	30000	*(133000)*	8	**4F190**	207	(-)
			2.61	III	29500	*(131000)*				3.15	III	30000	*(133000)*	8	**4F195**	207	(-)
5.84	73500	*(8300)*	0.86	-	12800	*(56900)*	7.04	60900	*(6880)*	1.03	I	16300	*(72500)*	8	**4D165**	249	
			1.05	I	12800	*(56900)*				1.05	I	16300	*(72500)*	8	**4D175**	249	
			1.05	I	12800	*(56900)*				1.27	I	16300	*(72500)*	8	**4D180**	249	
			1.27	I	20100	*(89300)*				1.30	I	20700	*(92200)*	8	**4E175**	249	
			1.40	II	20100	*(89300)*				1.60	II	20700	*(92200)*	8	**4E180**	249	
			1.40	II	20100	*(89300)*				1.69	II	20700	*(92200)*	8	**4E185**	249	
			1.60	II	29000	*(129000)*				1.60	II	29500	*(131000)*	8	**4F180**	249	
			1.78	II	29000	*(129000)*				1.78	II	29500	*(131000)*	8	**4F185**	249	
			2.17	III	29000	*(129000)*				2.45	III	29500	*(131000)*	8	**4F190**	249	(-)
			2.17	III	29000	*(129000)*				2.62	III	29500	*(131000)*	8	**4F195**	249	(-)
4.76	90000	*(10200)*	0.86	-	272	*(1210)*	5.75	74600	*(8430)*	0.86	-	12400	*(55100)*	8	**4D175**	305	
			0.86	-	272	*(1210)*				1.03	I	12400	*(55100)*	8	**4D180**	305	
			1.02	I	19200	*(85600)*				1.02	I	20000	*(89100)*	8	**4E175**	305	
			1.14	I	19200	*(85600)*				1.30	I	20000	*(89100)*	8	**4E180**	305	
			1.14	I	19200	*(85600)*				1.38	I	20000	*(89100)*	8	**4E185**	305	
			1.30	I	28300	*(126000)*				1.30	I	28900	*(129000)*	8	**4F180**	305	
			1.56	II	28300	*(126000)*				1.56	II	28900	*(129000)*	8	**4F185**	305	
			1.77	II	28300	*(126000)*				2.14	III	28900	*(129000)*	8	**4F190**	305	(-)
3.98	102000	*(11500)*	0.93	-	17200	*(76300)*	4.81	84600	*(9560)*	1.12	I	19500	*(86800)*	8	**4E17DC**	364	
			1.01	I	17200	*(76300)*				1.21	I	19500	*(86800)*	8	**4E18DB**	364	
			1.45	II	27800	*(123000)*				1.74	II	28500	*(127000)*	8	**4F18DB**	364	
			1.51	II	27800	*(123000)*				1.82	II	28500	*(127000)*	8	**4F19DB**	364	
3.42	119000	*(13400)*	0.86	-	10800	*(47900)*	4.13	98400	*(11100)*	1.04	I	18200	*(80800)*	8	**4E18DB**	424	
			1.22	I	27000	*(120000)*				1.47	II	27900	*(124000)*	8	**4F18DB**	424	
			1.30	I	27000	*(120000)*				1.56	II	27900	*(124000)*	8	**4F19DB**	424	

Notes: [1] For Y4 Double Reductions (4XXXDX) refer to the above table; for Y4 single reduction refer to tables on pages 2.91-2.130..

[2] Variable Frequency Drive (VFD) notes (see page 2.8 for Constant Torque Speed Ranges):
All 1HP+ motors require EP suffix in model number and can be used with a VFD, unless noted.
(-) = For Inverter Operation, starting condition may require ambient temperature of 5° C or higher.

Standard Mounting Selection Tables

7.5 HP (5.5 kW)

Standard Mounting Positions:

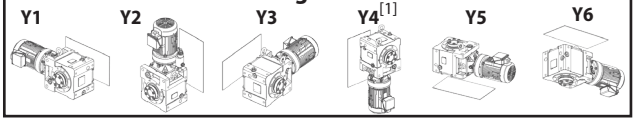

Dimension Pages:

Single Reduction	2.132-2.143
Single Reduction,Y2	2.144
Double Reduction	2.146-2.161
Double Reduction, Y2	2.162

Frequency	50 Hz	60 Hz
Input Speed	1450 RPM	1750 RPM
Number of Poles	4	

50Hz						60 Hz						Selection			
Output Speed (RPM)	Output Torque		Service Factor		Solid Shaft Overhung Load		Output Speed (RPM)	Output Torque		Service Factor		Solid Shaft Overhung Load		Base			VFD[2]
	in•lbs	*(N•m)*	SF	AGMA Class	lbs	*(N)*		in•lbs	*(N•m)*	SF	AGMA Class	lbs	*(N)*	Motor Power Code	Frame Size	Ratio	
2.90	140000	*(15900)*	1.05	I	26100	*(116000)*	3.50	116000	*(13100)*	1.27	I	27100	*(121000)*	8	**4F18DB**	501	
			1.10	I	26100	*(116000)*				1.32	I	27100	*(121000)*	8	**4F19DB**	501	
2.51	162000	*(18300)*	0.92	-	25200	*(112000)*	3.03	134000	*(15200)*	1.10	I	26400	*(117000)*	8	**4F18DB**	578	
			0.95	-	25200	*(112000)*				1.15	I	26400	*(117000)*	8	**4F19DB**	578	
2.12	191000	*(21600)*	0.80	-	17800	*(79200)*	2.56	159000	*(17900)*	0.97	-	25300	*(113000)*	8	**4F19DA**	683	

Sold & Serviced By:
ELECTROMATE
Toll Free Phone (877) SERVO98
www.electromate.com
sales@electromate.com

Notes: [1] For Y4 Double Reductions (4XXXDX) refer to the above table; for Y4 single reduction refer to tables on pages 2.91-2.130.
[2] Variable Frequency Drive (VFD) notes (see page 2.8 for Constant Torque Speed Ranges):
All 1HP+ motors require EP suffix in model number and can be used with a VFD, unless noted.

Standard Mounting Selection Tables

10 HP (7.5 kW)

Standard Mounting Positions:

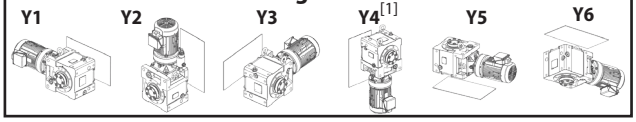

Dimension Pages:

Single Reduction	2.132-2.143
Single Reduction,Y2	2.144
Double Reduction	2.146-2.161
Double Reduction, Y2	2.162

Frequency	50 Hz	60 Hz
Input Speed	1450 RPM	1750 RPM
Number of Poles	4	

50Hz							60 Hz							Selection			
Output Speed (RPM)	Output Torque		Service Factor		Solid Shaft Overhung Load		Output Speed (RPM)	Output Torque		Service Factor		Solid Shaft Overhung Load		Base			VFD[2]
	in•lbs	(N•m)	SF	AGMA Class	lbs	(N)		in•lbs	(N•m)	SF	AGMA Class	lbs	(N)	Motor Power Code	Frame Size	Ratio	
138	4230	(478)	2.44	III	3540	(15700)	167	3510	(396)	2.53	III	3410	(15200)	10	**4A140**	11	
			2.53	III	5110	(22700)				2.53	III	4880	(21700)	10	**4B140**	11	
			2.93	III	5110	(22700)				2.93	III	4880	(21700)	10	**4B145**	11	
113	5160	(583)	2.21	III	3640	(16200)	137	4280	(483)	2.21	III	3530	(15700)	10	**4A140**	13	
			2.53	III	5320	(23700)				2.53	III	5090	(22600)	10	**4B140**	13	
			2.93	III	5320	(23700)				2.93	III	5090	(22600)	10	**4B145**	13	
104	5640	(638)	2.02	III	3700	(16400)	125	4680	(528)	2.02	III	3590	(15900)	10	**4A140**	14	
			2.53	III	5430	(24100)				2.53	III	5200	(23100)	10	**4B140**	14	
			2.93	III	5430	(24100)				2.93	III	5200	(23100)	10	**4B145**	14	
90.6	6450	(729)	1.77	II	3760	(16700)	109	5340	(604)	1.77	II	3660	(16300)	10	**4A140**	16	
			2.53	III	5570	(24800)				2.53	III	5350	(23800)	10	**4B140**	16	
			2.93	III	5570	(24800)				2.93	III	5350	(23800)	10	**4B145**	16	
82.9	7050	(797)	1.62	II	3810	(16900)	100.0	5840	(660)	1.62	II	3710	(16500)	10	**4A140**	18	
			2.53	III	5680	(25300)				2.53	III	5450	(24300)	10	**4B140**	18	
			2.93	III	5680	(25300)				2.93	III	5450	(24300)	10	**4B145**	18	
69.0	8470	(956)	1.35	I	3880	(17300)	83.3	7010	(792)	1.35	I	3800	(16900)	10	**4A140**	21	
			1.73	II	5890	(26200)				1.73	II	5670	(25200)	10	**4B140**	21	
			2.01	III	5890	(26200)				2.01	III	5670	(25200)	10	**4B145**	21	
			2.69	III	5890	(26200)				2.69	III	5670	(25200)	10	**4B160**	21	
64.7	9030	(1020)	1.26	I	3900	(17400)	78.1	7480	(845)	1.26	I	3830	(17000)	10	**4A140**	22	
			1.73	II	5960	(26500)				1.73	II	5740	(25600)	10	**4B140**	22	
			2.01	III	5960	(26500)				2.01	III	5740	(25600)	10	**4B145**	22	
			2.52	III	5960	(26500)				2.52	III	5740	(25600)	10	**4B160**	22	
			2.71	III	8670	(38600)				2.71	III	8300	(36900)	10	**4C160**	22	
59.2	9880	(1120)	1.16	I	3930	(17500)	71.4	8180	(925)	1.16	I	3870	(17200)	10	**4A140**	25	
			1.73	II	6060	(26900)				1.73	II	5850	(26000)	10	**4B140**	25	
			2.01	III	6060	(26900)				2.01	III	5850	(26000)	10	**4B145**	25	
			2.30	III	6060	(26900)				2.30	III	5850	(26000)	10	**4B160**	25	
			2.71	III	8850	(39400)				2.71	III	8480	(37700)	10	**4C160**	25	
51.8	11300	(1280)	1.01	I	3230	(14400)	62.5	9350	(1060)	1.01	I	3910	(17400)	10	**4A140**	28	
			1.73	II	6200	(27600)				1.73	II	6000	(26700)	10	**4B140**	28	
			2.01	III	6200	(27600)				2.01	III	6000	(26700)	10	**4B145**	28	
			2.63	III	9120	(40600)				2.63	III	8740	(38900)	10	**4C160**	28	
41.2	14200	(1600)	1.60	II	6410	(28500)	49.7	11800	(1330)	1.60	II	6230	(27700)	10	**4B140**	35	
			1.73	II	9570	(42600)				1.73	II	9200	(40900)	10	**4C140**	35	
			2.01	III	9570	(42600)				2.01	III	9200	(40900)	10	**4C145**	35	
			2.63	III	9570	(42600)				2.63	III	9200	(40900)	10	**4C160**	35	

Notes: [1] For Y4 Double Reductions (4XXXDX) refer to the above table; for Y4 single reduction refer to tables on pages 2.91-2.130..
[2] Variable Frequency Drive (VFD) notes (see page 2.8 for Constant Torque Speed Ranges):
All 1HP+ motors require EP suffix in model number and can be used with a VFD, unless noted.

Standard Mounting Selection Tables

10 HP (7.5 kW)

Standard Mounting Positions:

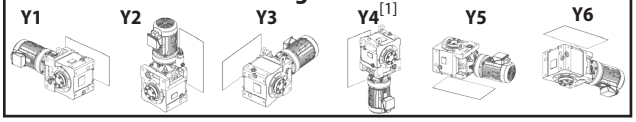

Dimension Pages:

Single Reduction	2.132-2.143
Single Reduction,Y2	2.144
Double Reduction	2.146-2.161
Double Reduction, Y2	2.162

Frequency	50 Hz	60 Hz
Input Speed	1450 RPM	1750 RPM
Number of Poles	4	

50Hz							60 Hz							Selection			
Output Speed (RPM)	Output Torque		Service Factor		Solid Shaft Overhung Load		Output Speed (RPM)	Output Torque		Service Factor		Solid Shaft Overhung Load		Base			VFD[2]
	in•lbs	(N•m)	SF	AGMA Class	lbs	(N)		in•lbs	(N•m)	SF	AGMA Class	lbs	(N)	Motor Power Code	Frame Size	Ratio	
37.7	15500	(1750)	1.47	II	6480	(28800)	45.5	12900	(1450)	1.47	II	6320	(28100)	10	**4B140**	39	
			1.73	II	9740	(43300)				1.73	II	9380	(41700)	10	**4C140**	39	
			2.01	III	9740	(43300)				2.01	III	9380	(41700)	10	**4C145**	39	
			2.63	III	9740	(43300)				2.63	III	9380	(41700)	10	**4C160**	39	
			2.86	III	9740	(43300)				2.93	III	9380	(41700)	10	**4C165**	39	
31.9	18300	(2070)	1.24	I	6600	(29300)	38.5	15200	(1720)	1.24	I	6470	(28800)	10	**4B140**	46	
			1.73	II	10000	(44700)				1.73	II	9700	(43100)	10	**4C140**	46	
			2.01	III	10000	(44700)				2.01	III	9700	(43100)	10	**4C145**	46	
			2.42	III	10000	(44700)				2.48	III	9700	(43100)	10	**4C160**	46	
			2.63	III	15500	(69100)				2.63	III	14900	(66100)	10	**4D160**	46	
27.6	21200	(2390)	1.07	I	6470	(28800)	33.3	17500	(1980)	1.07	I	6570	(29200)	10	**4B140**	53	
			1.60	II	10300	(45800)				1.60	II	9970	(44300)	10	**4C140**	53	
			1.93	II	10300	(45800)				1.94	II	9970	(44300)	10	**4C145**	53	
			2.10	III	10300	(45800)				2.15	III	9970	(44300)	10	**4C160**	53	
			2.49	III	16100	(71400)				2.49	III	15400	(68400)	10	**4D160**	53	
			2.98	III	16100	(71400)				3.01	III	15400	(68400)	10	**4D165**	53	
24.4	24000	(2710)	0.95	-	5010	(22300)	29.4	19900	(2250)	0.95	-	6640	(29500)	10	**4B140**	60	
			1.35	I	10500	(46700)				1.35	I	10200	(45300)	10	**4C140**	60	
			1.60	II	10500	(46700)				1.60	II	10200	(45300)	10	**4C145**	60	
			1.75	II	10500	(46700)				1.75	II	10200	(45300)	10	**4C160**	60	
			1.85	II	10500	(46700)				1.90	II	10200	(45300)	10	**4C165**	60	
			2.51	III	16500	(73400)				2.51	III	15800	(70400)	10	**4D165**	60	
21.6	27100	(3060)	1.15	I	10700	(47500)	26.0	22400	(2540)	1.15	I	10400	(46200)	10	**4C140**	67	
			1.26	I	10700	(47500)				1.46	II	10400	(46200)	10	**4C145**	67	
			1.68	II	10700	(47500)				1.68	II	10400	(46200)	10	**4C160**	67	
			1.72	II	16900	(75400)				1.72	II	16300	(72400)	10	**4D160**	67	
			2.13	III	16900	(75400)				2.15	III	16300	(72400)	10	**4D165**	67	
			2.48	III	16900	(75400)				2.60	III	16300	(72400)	10	**4D170**	67	
			2.85	III	16900	(75400)				2.85	III	16300	(72400)	10	**4D175**	67	
			2.85	III	16900	(75400)				3.44	III	16300	(72400)	10	**4D180**	67	(-)

Sold & Serviced By:
ELECTROMATE
Toll Free Phone (877) SERVO98
www.electromate.com
sales@electromate.com

Notes: [1] For Y4 Double Reductions (4XXXDX) refer to the above table; for Y4 single reduction refer to tables on pages 2.91-2.130.
[2] Variable Frequency Drive (VFD) notes (see page 2.8 for Constant Torque Speed Ranges):
All 1HP+ motors require EP suffix in model number and can be used with a VFD, unless noted.
(-) = For Inverter Operation, starting condition may require ambient temperature of 5° C or higher.

Standard Mounting Selection Tables

10 HP (7.5 kW)

Standard Mounting Positions:

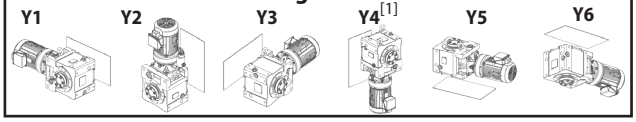

Dimension Pages:

Single Reduction	2.132-2.143
Single Reduction,Y2	2.144
Double Reduction	2.146-2.161
Double Reduction, Y2	2.162

Frequency	50 Hz	60 Hz
Input Speed	1450 RPM	1750 RPM
Number of Poles	4	

50Hz							60 Hz							Selection			
Output Speed (RPM)	Output Torque		Service Factor		Solid Shaft Overhung Load		Output Speed (RPM)	Output Torque		Service Factor		Solid Shaft Overhung Load		Base			VFD[2]
	in•lbs	(N•m)	SF	AGMA Class	lbs	(N)		in•lbs	(N•m)	SF	AGMA Class	lbs	(N)	Motor Power Code	Frame Size	Ratio	
19.7	29600	(3350)	1.15	I	10800	(48100)	23.8	24500	(2770)	1.15	I	10500	(46900)	10	**4C140**	74	
			1.26	I	10800	(48100)				1.46	II	10500	(46900)	10	**4C145**	74	
			1.50	II	10800	(48100)				1.54	II	10500	(46900)	10	**4C160**	74	
			1.72	II	17300	(76800)				1.72	II	16600	(73800)	10	**4D160**	74	
			2.13	III	17300	(76800)				2.15	III	16600	(73800)	10	**4D165**	74	
			2.48	III	17300	(76800)				2.60	III	16600	(73800)	10	**4D170**	74	
			2.60	III	17300	(76800)				2.60	III	16600	(73800)	10	**4D175**	74	
			2.60	III	17300	(76800)				3.14	III	16600	(73800)	10	**4D180**	74	(-)
			2.94	III	22300	(99200)				2.94	III	22000	(98000)	10	**4E175**	74	
			2.94	III	22300	(99200)				3.54	III	22000	(98000)	10	**4E180**	74	(-)
18.1	32200	(3640)	1.05	I	10900	(48500)	21.9	26700	(3020)	1.05	I	10700	(47400)	10	**4C145**	80	
			1.31	I	10900	(48500)				1.31	I	10700	(47400)	10	**4C160**	80	
			1.41	II	10900	(48500)				1.41	II	10700	(47400)	10	**4C165**	80	
			1.79	II	17600	(78100)				2.01	III	16900	(75100)	10	**4D165**	80	
			2.08	III	17600	(78100)				2.11	III	16900	(75100)	10	**4D170**	80	
			2.39	III	17600	(78100)				2.39	III	16900	(75100)	10	**4D175**	80	
			2.39	III	17600	(78100)				2.89	III	16900	(75100)	10	**4D180**	80	(-)
			2.60	III	22200	(98600)				2.60	III	22500	(99900)	10	**4E175**	80	
			2.70	III	22200	(98600)				3.21	III	22500	(99900)	10	**4E180**	80	(-)
			2.70	III	22200	(98600)				3.26	III	22500	(99900)	10	**4E185**	80	(-)
16.6	35300	(3990)	1.05	I	11000	(48900)	20.0	29200	(3300)	1.05	I	10800	(48000)	10	**4C145**	88	
			1.26	I	11000	(48900)				1.29	I	10800	(48000)	10	**4C160**	88	
			1.31	I	17900	(79400)				1.31	I	17200	(76600)	10	**4D160**	88	
			1.79	II	17900	(79400)				2.01	III	17200	(76600)	10	**4D165**	88	
			2.08	III	17900	(79400)				2.11	III	17200	(76600)	10	**4D170**	88	
			2.19	III	17900	(79400)				2.19	III	17200	(76600)	10	**4D175**	88	
			2.19	III	17900	(79400)				2.64	III	17200	(76600)	10	**4D180**	88	(-)
			2.47	III	22000	(97900)				2.47	III	22300	(99300)	10	**4E175**	88	
			2.47	III	22000	(97900)				2.98	III	22300	(99300)	10	**4E180**	88	(-)
			2.47	III	22000	(97900)				2.98	III	22300	(99300)	10	**4E185**	88	(-)
			2.47	III	22000	(97900)				2.98	III	22300	(99300)	10	**4E190**	88	(-)
			2.47	III	22000	(97900)				2.98	III	22300	(99300)	10	**4E195**	88	(-)

Notes: [1] For Y4 Double Reductions (4XXXDX) refer to the above table; for Y4 single reduction refer to tables on pages 2.91-2.130..
[2] Variable Frequency Drive (VFD) notes (see page 2.8 for Constant Torque Speed Ranges):
All 1HP+ motors require EP suffix in model number and can be used with a VFD, unless noted.
(-) = For Inverter Operation, starting condition may require ambient temperature of 5° C or higher.

Standard Mounting Selection Tables

10 HP (7.5 kW)

Standard Mounting Positions:

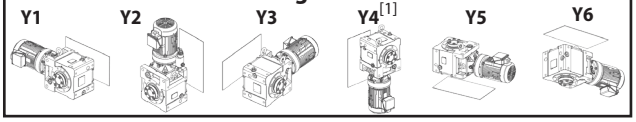

Dimension Pages:

Single Reduction	2.132-2.143
Single Reduction,Y2	2.144
Double Reduction	2.146-2.161
Double Reduction, Y2	2.162

Frequency	50 Hz	60 Hz
Input Speed	1450 RPM	1750 RPM
Number of Poles	4	

50Hz							60 Hz							Selection			
Output Speed (RPM)	Output Torque		Service Factor		Solid Shaft Overhung Load		Output Speed (RPM)	Output Torque		Service Factor		Solid Shaft Overhung Load		Base			VFD[2]
	in•lbs	*(N•m)*	SF	AGMA Class	lbs	*(N)*		in•lbs	*(N•m)*	SF	AGMA Class	lbs	*(N)*	Motor Power Code	Frame Size	Ratio	
14.3	40900	*(4620)*	1.00	I	11000	*(49100)*	17.2	33900	*(3830)*	1.00	I	11000	*(48700)*	10	**4C145**	102	
			1.08	I	11000	*(49100)*				1.11	I	11000	*(48700)*	10	**4C160**	102	
			1.27	I	18300	*(81600)*				1.40	II	17700	*(78800)*	10	**4D160**	102	
			1.52	II	18300	*(81600)*				1.52	II	17700	*(78800)*	10	**4D165**	102	
			1.79	II	18300	*(81600)*				1.89	II	17700	*(78800)*	10	**4D170**	102	
			1.89	II	18300	*(81600)*				1.89	II	17700	*(78800)*	10	**4D175**	102	
			1.89	II	18300	*(81600)*				2.28	III	17700	*(78800)*	10	**4D180**	102	(-)
			2.13	III	21700	*(96700)*				2.13	III	22100	*(98300)*	10	**4E175**	102	
			2.13	III	21700	*(96700)*				2.57	III	22100	*(98300)*	10	**4E180**	102	(-)
			2.13	III	21700	*(96700)*				2.57	III	22100	*(98300)*	10	**4E185**	102	(-)
			2.13	III	21700	*(96700)*				2.57	III	22100	*(98300)*	10	**4E190**	102	(-)
			2.13	III	21700	*(96700)*				2.57	III	22100	*(98300)*	10	**4E195**	102	(-)
			2.60	III	30400	*(135000)*				2.60	III	30700	*(137000)*	10	**4F180**	102	(-)
12.9	45100	*(5100)*	1.01	I	9560	*(42500)*	15.6	37400	*(4230)*	1.01	I	11000	*(49100)*	10	**4C160**	112	
			1.07	I	18700	*(83000)*				1.29	I	18100	*(80300)*	10	**4D160**	112	
			1.28	I	18700	*(83000)*				1.52	II	18100	*(80300)*	10	**4D165**	112	
			1.49	II	18700	*(83000)*				1.60	II	18100	*(80300)*	10	**4D170**	112	
			1.71	II	18700	*(83000)*				1.71	II	18100	*(80300)*	10	**4D175**	112	
			1.71	II	18700	*(83000)*				2.06	III	18100	*(80300)*	10	**4D180**	112	(-)
			1.92	II	21500	*(95700)*				2.01	III	21900	*(97500)*	10	**4E175**	112	
			2.27	III	21500	*(95700)*				2.51	III	21900	*(97500)*	10	**4E180**	112	(-)
			2.27	III	21500	*(95700)*				2.74	III	21900	*(97500)*	10	**4E185**	112	(-)
			2.47	III	30200	*(134000)*				2.51	III	30600	*(136000)*	10	**4F180**	112	(-)
11.8	49400	*(5580)*	0.83	-	7640	*(34000)*	14.3	40900	*(4620)*	0.92	-	11000	*(49100)*	10	**4C145**	123	
			1.07	I	18500	*(82200)*				1.29	I	18300	*(81600)*	10	**4D160**	123	
			1.28	I	18500	*(82200)*				1.52	II	18300	*(81600)*	10	**4D165**	123	
			1.49	II	18500	*(82200)*				1.56	II	18300	*(81600)*	10	**4D170**	123	
			1.56	II	18500	*(82200)*				1.56	II	18300	*(81600)*	10	**4D175**	123	
			1.56	II	18500	*(82200)*				1.89	II	18300	*(81600)*	10	**4D180**	123	(-)
			1.92	II	21300	*(94800)*				2.01	III	21700	*(96700)*	10	**4E175**	123	
			2.08	III	21300	*(94800)*				2.51	III	21700	*(96700)*	10	**4E180**	123	(-)
			2.08	III	21300	*(94800)*				2.51	III	21700	*(96700)*	10	**4E185**	123	(-)
			2.47	III	30000	*(134000)*				2.51	III	30400	*(135000)*	10	**4F180**	123	(-)

Notes: [1] For Y4 Double Reductions (4XXXDX) refer to the above table; for Y4 single reduction refer to tables on pages 2.91-2.130.
[2] Variable Frequency Drive (VFD) notes (see page 2.8 for Constant Torque Speed Ranges):
All 1HP+ motors require EP suffix in model number and can be used with a VFD, unless noted.
(-) = For Inverter Operation, starting condition may require ambient temperature of 5° C or higher.

Standard Mounting Selection Tables

10 HP (7.5 kW)

Standard Mounting Positions:

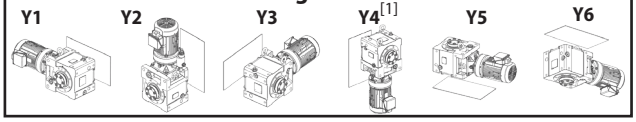

Dimension Pages:

Single Reduction	2.132-2.143
Single Reduction,Y2	2.144
Double Reduction	2.146-2.161
Double Reduction, Y2	2.162

Frequency	50 Hz	60 Hz
Input Speed	1450 RPM	1750 RPM
Number of Poles	4	

50Hz							60 Hz							Selection			
Output Speed (RPM)	Output Torque		Service Factor		Solid Shaft Overhung Load		Output Speed (RPM)	Output Torque		Service Factor		Solid Shaft Overhung Load		Base			VFD[2]
	in•lbs	(N•m)	SF	AGMA Class	lbs	(N)		in•lbs	(N•m)	SF	AGMA Class	lbs	(N)	Motor Power Code	Frame Size	Ratio	
9.63	60700	(6850)	0.86	-	16300	(72700)	11.6	50300	(5680)	0.99	-	18300	(81600)	10	**4D160**	151	
			1.04	I	16300	(72700)				1.05	I	18300	(81600)	10	**4D165**	151	
			1.21	I	16300	(72700)				1.27	I	18300	(81600)	10	**4D170**	151	
			1.27	I	16300	(72700)				1.27	I	18300	(81600)	10	**4D175**	151	
			1.27	I	16300	(72700)				1.54	II	18300	(81600)	10	**4D180**	151	(-)
			1.51	II	20700	(92200)				1.51	II	21300	(94600)	10	**4E175**	151	
			1.69	II	20700	(92200)				2.01	III	21300	(94600)	10	**4E180**	151	(-)
			1.69	II	20700	(92200)				2.04	III	21300	(94600)	10	**4E185**	151	(-)
			2.01	III	29500	(131000)				2.01	III	30000	(133000)	10	**4F180**	151	(-)
			2.48	III	29500	(131000)				2.51	III	30000	(133000)	10	**4F185**	151	(-)
			2.63	III	29500	(131000)				2.79	III	30000	(133000)	10	**4F190**	151	(-)
			2.63	III	29500	(131000)				3.17	III	30000	(133000)	10	**4F195**	151	(-)
8.12	72000	(8130)	0.88	-	13300	(59100)	9.80	59600	(6740)	1.00	I	16600	(73700)	10	**4D165**	179	
			1.02	I	13300	(59100)				1.07	I	16600	(73700)	10	**4D170**	179	
			1.07	I	13300	(59100)				1.07	I	16600	(73700)	10	**4D175**	179	
			1.07	I	13300	(59100)				1.29	I	16600	(73700)	10	**4D180**	179	(-)
			1.32	I	20200	(89700)				1.43	II	20800	(92500)	10	**4E175**	179	
			1.43	II	20200	(89700)				1.60	II	20800	(92500)	10	**4E180**	179	(-)
			1.43	II	20200	(89700)				1.72	II	20800	(92500)	10	**4E185**	179	(-)
			1.60	II	29100	(129000)				1.60	II	29600	(132000)	10	**4F180**	179	(-)
			2.01	III	29100	(129000)				2.01	III	29600	(132000)	10	**4F185**	179	(-)
			2.21	III	29100	(129000)				2.43	III	29600	(132000)	10	**4F190**	179	(-)
			2.21	III	29100	(129000)				2.67	III	29600	(132000)	10	**4F195**	179	(-)
7.02	83200	(9400)	0.88	-	8420	(37500)	8.47	69000	(7790)	0.93	-	14200	(63200)	10	**4D170**	207	
			0.93	-	8420	(37500)				0.93	-	14200	(63200)	10	**4D175**	207	
			0.93	-	8420	(37500)				1.12	I	14200	(63200)	10	**4D180**	207	
			1.11	I	19600	(87100)				1.11	I	20300	(90300)	10	**4E175**	207	
			1.23	I	19600	(87100)				1.30	I	20300	(90300)	10	**4E180**	207	(-)
			1.23	I	19600	(87100)				1.49	II	20300	(90300)	10	**4E185**	207	(-)
			1.30	I	28600	(127000)				1.30	I	29200	(130000)	10	**4F180**	207	(-)
			1.60	II	28600	(127000)				1.60	II	29200	(130000)	10	**4F185**	207	(-)
			1.91	II	28600	(127000)				2.04	III	29200	(130000)	10	**4F190**	207	(-)
			1.91	II	28600	(127000)				2.31	III	29200	(130000)	10	**4F195**	207	(-)

Notes: [1] For Y4 Double Reductions (4XXXDX) refer to the above table; for Y4 single reduction refer to tables on pages 2.91-2.130..

[2] Variable Frequency Drive (VFD) notes (see page 2.8 for Constant Torque Speed Ranges):
All 1HP+ motors require EP suffix in model number and can be used with a VFD, unless noted.
(-) = For Inverter Operation, starting condition may require ambient temperature of 5° C or higher.

Standard Mounting Selection Tables

10 HP (7.5 kW)

Standard Mounting Positions:

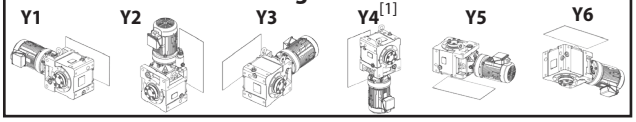

Dimension Pages:

Single Reduction	2.132-2.143
Single Reduction,Y2	2.144
Double Reduction	2.146-2.161
Double Reduction, Y2	2.162

Frequency	50 Hz	60 Hz
Input Speed	1450 RPM	1750 RPM
Number of Poles	4	

50Hz						60 Hz						Selection			
Output Speed (RPM)	Output Torque		Service Factor		Solid Shaft Overhung Load		Output Speed (RPM)	Output Torque		Service Factor		Solid Shaft Overhung Load		Base			VFD[2]
	in•lbs	*(N•m)*	SF	AGMA Class	lbs	*(N)*		in•lbs	*(N•m)*	SF	AGMA Class	lbs	*(N)*	Motor Power Code	Frame Size	Ratio	
5.84	100000	*(11300)*	0.93	-	18700	*(83300)*	7.04	83000	*(9380)*	0.95	-	19600	*(87200)*	10	**4E175**	249	
			1.02	I	18700	*(83300)*				1.17	I	19600	*(87200)*	10	**4E180**	249	(-)
			1.02	I	18700	*(83300)*				1.24	I	19600	*(87200)*	10	**4E185**	249	(-)
			1.17	I	27800	*(124000)*				1.17	I	28600	*(127000)*	10	**4F180**	249	(-)
			1.31	I	27800	*(124000)*				1.31	I	28600	*(127000)*	10	**4F185**	249	(-)
			1.59	II	27800	*(124000)*				1.80	II	28600	*(127000)*	10	**4F190**	249	(-)
			1.59	II	27800	*(124000)*				1.92	II	28600	*(127000)*	10	**4F195**	249	(-)
4.76	123000	*(13900)*	0.84	-	11900	*(53000)*	5.75	102000	*(11500)*	0.95	-	18700	*(83000)*	10	**4E180**	305	
			0.84	-	11900	*(53000)*				1.01	I	18700	*(83000)*	10	**4E185**	305	
			0.95	-	26900	*(119000)*				0.95	-	27800	*(124000)*	10	**4F180**	305	
			1.15	I	26900	*(119000)*				1.15	I	27800	*(124000)*	10	**4F185**	305	(-)
			1.30	I	26900	*(119000)*				1.57	II	27800	*(124000)*	10	**4F190**	305	(-)
3.98	139000	*(15700)*	1.06	I	26100	*(116000)*	4.81	115000	*(13000)*	1.28	I	27200	*(121000)*	10	**4F18DB**	364	(-)
			1.11	I	26100	*(116000)*				1.33	I	27200	*(121000)*	10	**4F19DB**	364	(-)
3.42	162000	*(18300)*	0.89	-	25200	*(112000)*	4.13	134000	*(15200)*	1.08	I	26400	*(117000)*	10	**4F18DB**	424	
			0.95	-	25200	*(112000)*				1.15	I	26400	*(117000)*	10	**4F19DB**	424	
2.90	191000	*(21600)*	0.80	-	17800	*(79200)*	3.50	159000	*(17900)*	0.97	-	25300	*(113000)*	10	**4F19DB**	501	

Sold & Serviced By:
ELECTROMATE
Toll Free Phone (877) SERVO98
www.electromate.com
sales@electromate.com

Notes: [1] For Y4 Double Reductions (4XXXDX) refer to the above table; for Y4 single reduction refer to tables on pages 2.91-2.130.
[2] Variable Frequency Drive (VFD) notes (see page 2.8 for Constant Torque Speed Ranges):
All 1HP+ motors require EP suffix in model number and can be used with a VFD, unless noted.
(-) = For Inverter Operation, starting condition may require ambient temperature of 5° C or higher.

Standard Mounting Selection Tables

15 HP (11 kW)

Standard Mounting Positions:

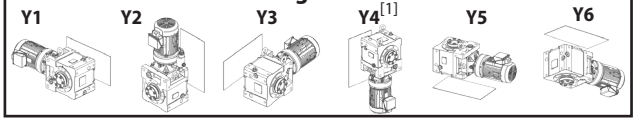

Dimension Pages:

Single Reduction	2.132-2.143
Single Reduction,Y2	2.144
Double Reduction	2.146-2.161
Double Reduction, Y2	2.162

Frequency	50 Hz	60 Hz
Input Speed	1450 RPM	1750 RPM
Number of Poles	4	

50Hz							60 Hz						Selection			
Output Speed (RPM)	Output Torque		Service Factor		Solid Shaft Overhung Load		Output Speed (RPM)	Output Torque		Service Factor		Solid Shaft Overhung Load		Base			VFD[2]
	in•lbs	(N•m)	SF	AGMA Class	lbs	(N)		in•lbs	(N•m)	SF	AGMA Class	lbs	(N)	Motor Power Code	Frame Size	Ratio	
138	6210	(701)	1.66	II	3260	(14500)	167	5140	(581)	1.84	II	3180	(14200)	15	**4A145**	11	
			2.00	III	4890	(21700)				2.00	III	4700	(20900)	15	**4B145**	11	
			2.30	III	4890	(21700)				2.30	III	4700	(20900)	15	**4B160**	11	
			2.64	III	4890	(21700)				2.64	III	4700	(20900)	15	**4B165**	11	
			2.73	III	7060	(31400)				2.73	III	6740	(30000)	15	**4C165**	11	
113	7570	(855)	1.50	II	3310	(14700)	137	6270	(708)	1.51	II	3250	(14500)	15	**4A140**	13	
			1.73	II	5050	(22500)				1.73	II	4870	(21700)	15	**4B140**	13	
			2.00	III	5050	(22500)				2.00	III	4870	(21700)	15	**4B145**	13	
			2.30	III	5040	(22400)				2.30	III	4860	(21600)	15	**4B160**	13	
			2.64	III	5040	(22400)				2.64	III	4860	(21600)	15	**4B165**	13	
			2.73	III	7340	(32600)				2.73	III	7020	(31200)	15	**4C165**	13	
104	8280	(935)	1.38	I	3330	(14800)	125	6860	(775)	1.38	I	3280	(14600)	15	**4A140**	14	
			1.73	II	5140	(22900)				1.73	II	4960	(22100)	15	**4B140**	14	
			2.00	III	5140	(22900)				2.00	III	4960	(22100)	15	**4B145**	14	
			2.30	III	5130	(22800)				2.30	III	4950	(22000)	15	**4B160**	14	
			2.54	III	5130	(22800)				2.64	III	4950	(22000)	15	**4B165**	14	
			2.73	III	7490	(33300)				2.73	III	7170	(31900)	15	**4C165**	14	
90.6	9460	(1070)	1.21	I	3350	(14900)	109	7840	(886)	1.21	I	3320	(14700)	15	**4A140**	16	
			1.73	II	5250	(23300)				1.73	II	5080	(22600)	15	**4B140**	16	
			2.00	III	5250	(23300)				2.00	III	5080	(22600)	15	**4B145**	16	
			2.27	III	5260	(23400)				2.30	III	5090	(22600)	15	**4B160**	16	
			2.27	III	5260	(23400)				2.40	III	5090	(22600)	15	**4B165**	16	
			2.30	III	7740	(34400)				2.30	III	7420	(33000)	15	**4C160**	16	
			2.73	III	7740	(34400)				2.73	III	7420	(33000)	15	**4C165**	16	
82.9	10300	(1170)	1.10	I	3350	(14900)	100.0	8570	(969)	1.10	I	3340	(14800)	15	**4A140**	18	
			1.73	II	5320	(23700)				1.73	II	5160	(23000)	15	**4B140**	18	
			2.00	III	5320	(23700)				2.00	III	5160	(23000)	15	**4B145**	18	
			2.15	III	5330	(23700)				2.20	III	5170	(23000)	15	**4B160**	18	
			2.30	III	7890	(35100)				2.30	III	7580	(33700)	15	**4C160**	18	
			2.73	III	7890	(35100)				2.73	III	7580	(33700)	15	**4C165**	18	
69.0	12400	(1400)	0.92	-	2160	(9600)	83.3	10300	(1160)	0.92	-	3350	(14900)	15	**4A140**	21	
			1.18	I	5460	(24300)				1.18	I	5320	(23700)	15	**4B140**	21	
			1.37	I	5460	(24300)				1.37	I	5320	(23700)	15	**4B145**	21	
			1.83	II	5460	(24300)				1.83	II	5320	(23700)	15	**4B160**	21	
			2.30	III	8170	(36300)				2.30	III	7860	(35000)	15	**4C160**	21	
			2.73	III	8170	(36300)				2.73	III	7860	(35000)	15	**4C165**	21	

Notes: [1] For Y4 Double Reductions (4XXXDX) refer to the above table; for Y4 single reduction refer to tables on pages 2.91-2.130..

[2] Variable Frequency Drive (VFD) notes (see page 2.8 for Constant Torque Speed Ranges):
All 1HP+ motors require EP suffix in model number and can be used with a VFD, unless noted.
(-) = For Inverter Operation, starting condition may require ambient temperature of 5° C or higher.

Standard Mounting Selection Tables

15 HP (11 kW)

Standard Mounting Positions:

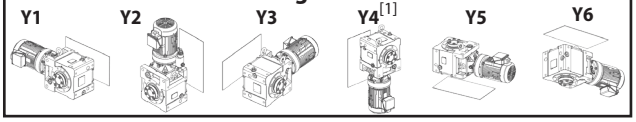

Dimension Pages:

Single Reduction	2.132-2.143
Single Reduction,Y2	2.144
Double Reduction	2.146-2.161
Double Reduction, Y2	2.162

Frequency	50 Hz	60 Hz
Input Speed	1450 RPM	1750 RPM
Number of Poles	4	

50Hz							60 Hz							Selection			
Output Speed (RPM)	Output Torque		Service Factor		Solid Shaft Overhung Load		Output Speed (RPM)	Output Torque		Service Factor		Solid Shaft Overhung Load		Base			VFD[2]
	in•lbs	(N•m)	SF	AGMA Class	lbs	(N)		in•lbs	(N•m)	SF	AGMA Class	lbs	(N)	Motor Power Code	Frame Size	Ratio	
64.7	13200	(1500)	0.86	-	290	(1290)	78.1	11000	(1240)	0.86	-	3350	(14900)	15	**4A140**	22	
			1.18	I	5500	(24500)				1.18	I	5370	(23900)	15	**4B140**	22	
			1.37	I	5500	(24500)				1.37	I	5370	(23900)	15	**4B145**	22	
			1.72	II	5500	(24500)				1.72	II	5370	(23900)	15	**4B160**	22	
			1.85	II	8270	(36800)				1.85	II	7970	(35400)	15	**4C160**	22	
			2.19	III	8270	(36800)				2.19	III	7970	(35400)	15	**4C165**	22	
59.2	14500	(1640)	1.18	I	5560	(24700)	71.4	12000	(1360)	1.18	I	5440	(24200)	15	**4B140**	25	
			1.37	I	5560	(24700)				1.37	I	5440	(24200)	15	**4B145**	25	
			1.57	II	5560	(24700)				1.57	II	5440	(24200)	15	**4B160**	25	
			1.85	II	8420	(37400)				1.85	II	8110	(36100)	15	**4C160**	25	
			2.19	III	8420	(37400)				2.19	III	8110	(36100)	15	**4C165**	25	
			2.94	III	8420	(37400)				3.14	III	8110	(36100)	15	**4C175**	25	
51.8	16600	(1870)	1.18	I	5630	(25000)	62.5	13700	(1550)	1.18	I	5530	(24600)	15	**4B140**	28	
			1.37	I	5630	(25000)				1.37	I	5530	(24600)	15	**4B145**	28	
			1.79	II	8620	(38300)				1.79	II	8330	(37100)	15	**4C160**	28	
			2.19	III	8620	(38300)				2.19	III	8330	(37100)	15	**4C165**	28	
			2.67	III	8620	(38300)				2.75	III	8330	(37100)	15	**4C170**	28	
41.2	20800	(2350)	1.09	I	5690	(25300)	49.7	17200	(1950)	1.09	I	5640	(25100)	15	**4B140**	35	
			1.18	I	8940	(39800)				1.18	I	8680	(38600)	15	**4C140**	35	
			1.37	I	8940	(39800)				1.37	I	8680	(38600)	15	**4C145**	35	
			1.79	II	8940	(39800)				1.79	II	8680	(38600)	15	**4C160**	35	
			2.19	III	14100	(62600)				2.19	III	13500	(60000)	15	**4D165**	35	
			2.51	III	14100	(62600)				2.51	III	13500	(60000)	15	**4D170**	35	
			2.74	III	14100	(62600)				2.74	III	13500	(60000)	15	**4D175**	35	
37.7	22800	(2570)	1.00	I	5700	(25400)	45.5	18900	(2130)	1.00	I	5670	(25200)	15	**4B140**	39	
			1.18	I	9050	(40300)				1.18	I	8810	(39200)	15	**4C140**	39	
			1.37	I	9050	(40300)				1.37	I	8810	(39200)	15	**4C145**	39	
			1.79	II	9050	(40300)				1.79	II	8810	(39200)	15	**4C160**	39	
			1.95	II	9050	(40300)				2.00	III	8810	(39200)	15	**4C165**	39	
			2.19	III	14300	(63800)				2.19	III	13800	(61300)	15	**4D165**	39	
			2.51	III	14300	(63800)				2.51	III	13800	(61300)	15	**4D170**	39	
			2.74	III	14300	(63800)				2.74	III	13800	(61300)	15	**4D175**	39	

Notes: [1] For Y4 Double Reductions (4XXXDX) refer to the above table; for Y4 single reduction refer to tables on pages 2.91-2.130.
[2] Variable Frequency Drive (VFD) notes (see page 2.8 for Constant Torque Speed Ranges):
All 1HP+ motors require EP suffix in model number and can be used with a VFD, unless noted.

Standard Mounting Selection Tables

15 HP (11 kW)

Standard Mounting Positions:

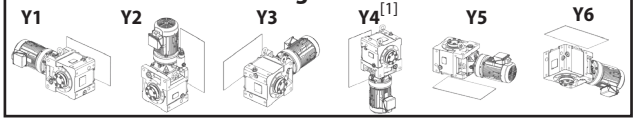

Dimension Pages:

Single Reduction	2.132-2.143
Single Reduction,Y2	2.144
Double Reduction	2.146-2.161
Double Reduction, Y2	2.162

Frequency	50 Hz	60 Hz
Input Speed	1450 RPM	1750 RPM
Number of Poles	4	

50Hz							60 Hz							Selection			
Output Speed (RPM)	Output Torque		Service Factor		Solid Shaft Overhung Load		Output Speed (RPM)	Output Torque		Service Factor		Solid Shaft Overhung Load		Base			VFD[2]
	in•lbs	(N•m)	SF	AGMA Class	lbs	(N)		in•lbs	(N•m)	SF	AGMA Class	lbs	(N)	Motor Power Code	Frame Size	Ratio	
31.9	26900	(3040)	0.85	-	2350	(10500)	38.5	22300	(2520)	0.85	-	5700	(25400)	15	**4B140**	46	
			1.18	I	9240	(41100)				1.18	I	9030	(40200)	15	**4C140**	46	
			1.37	I	9240	(41100)				1.37	I	9030	(40200)	15	**4C145**	46	
			1.65	II	9240	(41100)				1.69	II	9030	(40200)	15	**4C160**	46	
			1.79	II	14800	(66000)				1.79	II	14300	(63500)	15	**4D160**	46	
			2.05	III	14800	(66000)				2.05	III	14300	(63500)	15	**4D165**	46	
			2.48	III	14800	(66000)				2.48	III	14300	(63500)	15	**4D170**	46	
			2.74	III	14800	(66000)				2.74	III	14300	(63500)	15	**4D175**	46	
			2.87	III	14800	(66000)				3.38	III	14300	(63500)	15	**4D180**	46	(-)
27.6	31000	(3510)	1.09	I	9360	(41600)	33.3	25700	(2910)	1.09	I	9190	(40900)	15	**4C140**	53	
			1.32	I	9360	(41600)				1.33	I	9190	(40900)	15	**4C145**	53	
			1.43	II	9360	(41600)				1.47	II	9190	(40900)	15	**4C160**	53	
			1.70	II	15300	(67900)				1.70	II	14700	(65500)	15	**4D160**	53	
			2.03	III	15300	(67900)				2.05	III	14700	(65500)	15	**4D165**	53	
			2.32	III	15300	(67900)				2.32	III	14700	(65500)	15	**4D170**	53	
			2.49	III	15300	(67900)				2.49	III	14700	(65500)	15	**4D175**	53	
			2.49	III	15300	(67900)				2.95	III	14700	(65500)	15	**4D180**	53	(-)
			2.73	III	20500	(91200)				2.74	III	19700	(87400)	15	**4E175**	53	
			2.80	III	20500	(91200)				2.95	III	19700	(87400)	15	**4E180**	53	(-)
			2.80	III	20500	(91200)				3.38	III	19700	(87400)	15	**4E185**	53	(-)
			2.95	III	30800	(137000)				2.95	III	31100	(138000)	15	**4F180**	53	(-)
24.4	35200	(3970)	1.09	I	9440	(42000)	29.4	29100	(3290)	1.09	I	9310	(41400)	15	**4C145**	60	
			1.19	I	9440	(42000)				1.19	I	9310	(41400)	15	**4C160**	60	
			1.26	I	9440	(42000)				1.29	I	9310	(41400)	15	**4C165**	60	
			1.71	II	15600	(69400)				1.71	II	15100	(67100)	15	**4D165**	60	
			1.79	II	15600	(69400)				1.79	II	15100	(67100)	15	**4D170**	60	
			2.19	III	15600	(69400)				2.19	III	15100	(67100)	15	**4D175**	60	
			2.19	III	15600	(69400)				2.65	III	15100	(67100)	15	**4D180**	60	(-)
			2.47	III	21100	(93800)				2.78	III	20200	(90000)	15	**4E180**	60	(-)
			2.47	III	21100	(93800)				2.99	III	20200	(90000)	15	**4E185**	60	(-)
			2.47	III	21100	(93800)				2.99	III	20200	(90000)	15	**4E190**	60	(-)
			2.47	III	21100	(93800)				2.99	III	20200	(90000)	15	**4E195**	60	(-)
			2.78	III	30600	(136000)				2.78	III	30900	(137000)	15	**4F180**	60	(-)

Notes: [1] For Y4 Double Reductions (4XXXDX) refer to the above table; for Y4 single reduction refer to tables on pages 2.91-2.130..

[2] Variable Frequency Drive (VFD) notes (see page 2.8 for Constant Torque Speed Ranges):
All 1HP+ motors require EP suffix in model number and can be used with a VFD, unless noted.
(-) = For Inverter Operation, starting condition may require ambient temperature of 5° C or higher.

Standard Mounting Selection Tables

15 HP (11 kW)

Standard Mounting Positions:

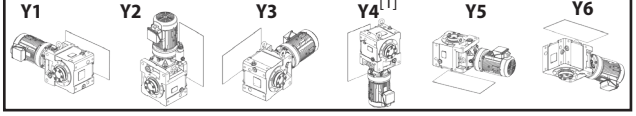

Dimension Pages:

Single Reduction	2.132-2.143
Single Reduction,Y2	2.144
Double Reduction	2.146-2.161
Double Reduction, Y2	2.162

Frequency	50 Hz	60 Hz
Input Speed	1450 RPM	1750 RPM
Number of Poles	4	

50Hz							60 Hz							Selection			
Output Speed (RPM)	Output Torque		Service Factor		Solid Shaft Overhung Load		Output Speed (RPM)	Output Torque		Service Factor		Solid Shaft Overhung Load		Base			VFD[2]
	in•lbs	*(N•m)*	SF	AGMA Class	lbs	*(N)*		in•lbs	*(N•m)*	SF	AGMA Class	lbs	*(N)*	Motor Power Code	Frame Size	Ratio	
21.6	39700	*(4490)*	1.15	I	9480	*(42200)*	26.0	32900	*(3720)*	1.15	I	9400	*(41800)*	15	**4C160**	67	
			1.45	II	15900	*(70800)*				1.46	II	15400	*(68600)*	15	**4D165**	67	
			1.69	II	15900	*(70800)*				1.77	II	15400	*(68600)*	15	**4D170**	67	
			1.94	II	15900	*(70800)*				1.94	II	15400	*(68600)*	15	**4D175**	67	
			1.94	II	15900	*(70800)*				2.34	III	15400	*(68600)*	15	**4D180**	67	(-)
			2.14	III	21600	*(96200)*				2.19	III	20800	*(92400)*	15	**4E175**	67	
			2.19	III	21600	*(96200)*				2.64	III	20800	*(92400)*	15	**4E180**	67	(-)
			2.19	III	21600	*(96200)*				2.64	III	20800	*(92400)*	15	**4E185**	67	(-)
			2.19	III	21600	*(96200)*				2.64	III	20800	*(92400)*	15	**4E190**	67	(-)
			2.19	III	21600	*(96200)*				2.64	III	20800	*(92400)*	15	**4E195**	67	(-)
			2.73	III	30500	*(135000)*				2.73	III	30700	*(137000)*	15	**4F180**	67	(-)
19.7	43500	*(4910)*	0.86	-	9490	*(42200)*	23.8	36000	*(4070)*	1.00	I	9450	*(42000)*	15	**4C145**	74	
			1.02	I	9490	*(42200)*				1.05	I	9450	*(42000)*	15	**4C160**	74	
			1.17	I	16100	*(71800)*				1.17	I	15700	*(69700)*	15	**4D160**	74	
			1.45	II	16100	*(71800)*				1.46	II	15700	*(69700)*	15	**4D165**	74	
			1.69	II	16100	*(71800)*				1.77	II	15700	*(69700)*	15	**4D170**	74	
			1.78	II	16100	*(71800)*				1.78	II	15700	*(69700)*	15	**4D175**	74	
			1.78	II	16100	*(71800)*				2.14	III	15700	*(69700)*	15	**4D180**	74	(-)
			2.00	III	21600	*(96100)*				2.00	III	21200	*(94200)*	15	**4E175**	74	
			2.00	III	21600	*(96100)*				2.42	III	21200	*(94200)*	15	**4E180**	74	(-)
			2.00	III	21600	*(96100)*				2.42	III	21200	*(94200)*	15	**4E185**	74	(-)
			2.00	III	21600	*(96100)*				2.42	III	21200	*(94200)*	15	**4E190**	74	(-)
			2.00	III	21600	*(96100)*				2.42	III	21200	*(94200)*	15	**4E195**	74	(-)
			2.73	III	30300	*(135000)*				2.73	III	30600	*(136000)*	15	**4F180**	74	(-)
18.1	47300	*(5340)*	0.96	-	8660	*(38500)*	21.9	39200	*(4430)*	0.96	-	9480	*(42200)*	15	**4C165**	80	
			1.22	I	16300	*(72700)*				1.37	I	15900	*(70700)*	15	**4D165**	80	
			1.42	II	16300	*(72700)*				1.44	II	15900	*(70700)*	15	**4D170**	80	
			1.63	II	16300	*(72700)*				1.63	II	15900	*(70700)*	15	**4D175**	80	
			1.63	II	16300	*(72700)*				1.97	II	15900	*(70700)*	15	**4D180**	80	(-)
			1.77	II	21400	*(95200)*				1.77	II	21600	*(95900)*	15	**4E175**	80	
			1.84	II	21400	*(95200)*				2.19	III	21600	*(95900)*	15	**4E180**	80	(-)
			1.84	II	21400	*(95200)*				2.22	III	21600	*(95900)*	15	**4E185**	80	(-)
			1.84	II	21400	*(95200)*				2.22	III	21600	*(95900)*	15	**4E190**	80	(-)
			1.84	II	21400	*(95200)*				2.22	III	21600	*(95900)*	15	**4E195**	80	(-)
			2.19	III	30100	*(134000)*				2.19	III	30500	*(136000)*	15	**4F180**	80	(-)
			2.74	III	30100	*(134000)*				2.74	III	30500	*(136000)*	15	**4F185**	80	(-)

Notes: [1] For Y4 Double Reductions (4XXXDX) refer to the above table; for Y4 single reduction refer to tables on pages 2.91-2.130.

[2] Variable Frequency Drive (VFD) notes (see page 2.8 for Constant Torque Speed Ranges):
All 1HP+ motors require EP suffix in model number and can be used with a VFD, unless noted.
(-) = For Inverter Operation, starting condition may require ambient temperature of 5° C or higher.

Standard Mounting Selection Tables

15 HP (11 kW)

Standard Mounting Positions:

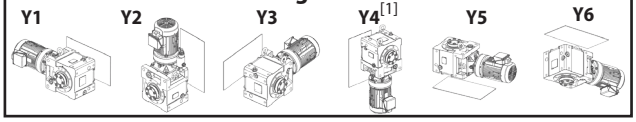

Dimension Pages:

Single Reduction	2.132-2.143
Single Reduction,Y2	2.144
Double Reduction	2.146-2.161
Double Reduction, Y2	2.162

Frequency	50 Hz	60 Hz
Input Speed	1450 RPM	1750 RPM
Number of Poles	4	

50Hz							60 Hz							Selection			
Output Speed (RPM)	Output Torque		Service Factor		Solid Shaft Overhung Load		Output Speed (RPM)	Output Torque		Service Factor		Solid Shaft Overhung Load		Base			VFD[2]
	in•lbs	(N•m)	SF	AGMA Class	lbs	(N)		in•lbs	(N•m)	SF	AGMA Class	lbs	(N)	Motor Power Code	Frame Size	Ratio	
16.6	51700	(5840)	0.86	-	6210	(27600)	20.0	42900	(4840)	0.88	-	9490	(42200)	15	**4C160**	88	
			1.22	I	16500	(73600)				1.37	I	16100	(71700)	15	**4D165**	88	
			1.42	II	16500	(73600)				1.44	II	16100	(71700)	15	**4D170**	88	
			1.49	II	16500	(73600)				1.49	II	16100	(71700)	15	**4D175**	88	
			1.49	II	16500	(73600)				1.80	II	16100	(71700)	15	**4D180**	88	
			1.68	II	21200	(94200)				1.68	II	21600	(96200)	15	**4E175**	88	
			1.68	II	21200	(94200)				2.03	III	21600	(96200)	15	**4E180**	88	
			1.68	II	21200	(94200)				2.03	III	21600	(96200)	15	**4E185**	88	
			1.68	II	21200	(94200)				2.03	III	21600	(96200)	15	**4E190**	88	(-)
			1.68	II	21200	(94200)				2.03	III	21600	(96200)	15	**4E195**	88	(-)
			2.19	III	29900	(133000)				2.19	III	30300	(135000)	15	**4F180**	88	
			2.74	III	29900	(133000)				2.74	III	30300	(135000)	15	**4F185**	88	
14.3	60000	(6780)	1.04	I	16500	(73300)	17.2	49700	(5620)	1.04	I	16500	(73200)	15	**4D165**	102	
			1.22	I	16500	(73300)				1.29	I	16500	(73200)	15	**4D170**	102	
			1.29	I	16500	(73300)				1.29	I	16500	(73200)	15	**4D175**	102	
			1.29	I	16500	(73300)				1.55	II	16500	(73200)	15	**4D180**	102	
			1.45	II	20800	(92400)				1.45	II	21300	(94700)	15	**4E175**	102	
			1.45	II	20800	(92400)				1.75	II	21300	(94700)	15	**4E180**	102	
			1.45	II	20800	(92400)				1.75	II	21300	(94700)	15	**4E185**	102	
			1.45	II	20800	(92400)				1.75	II	21300	(94700)	15	**4E190**	102	(-)
			1.45	II	20800	(92400)				1.75	II	21300	(94700)	15	**4E195**	102	(-)
			1.77	II	29600	(132000)				1.77	II	30000	(134000)	15	**4F180**	102	
			2.19	III	29600	(132000)				2.19	III	30000	(134000)	15	**4F185**	102	
			2.65	III	29600	(132000)				2.79	III	30000	(134000)	15	**4F190**	102	(-)
			2.65	III	29600	(132000)				3.20	III	30000	(134000)	15	**4F195**	102	(-)
12.9	66200	(7480)	0.87	-	15000	(66600)	15.6	54900	(6200)	1.04	I	16600	(74100)	15	**4D165**	112	
			1.01	I	15000	(66600)				1.09	I	16600	(74100)	15	**4D170**	112	
			1.17	I	15000	(66600)				1.17	I	16600	(74100)	15	**4D175**	112	
			1.17	I	15000	(66600)				1.41	II	16600	(74100)	15	**4D180**	112	
			1.31	I	20400	(91000)				1.37	I	21000	(93500)	15	**4E175**	112	
			1.55	II	20400	(91000)				1.71	II	21000	(93500)	15	**4E180**	112	
			1.55	II	20400	(91000)				1.87	II	21000	(93500)	15	**4E185**	112	
			1.68	II	29300	(130000)				1.71	II	29800	(133000)	15	**4F180**	112	
			2.05	III	29300	(130000)				2.05	III	29800	(133000)	15	**4F185**	112	
			2.21	III	29300	(130000)				2.21	III	29800	(133000)	15	**4F190**	112	(-)
			2.41	III	29300	(130000)				2.74	III	29800	(133000)	15	**4F195**	112	(-)

Notes: [1] For Y4 Double Reductions (4XXXDX) refer to the above table; for Y4 single reduction refer to tables on pages 2.91-2.130..

[2] Variable Frequency Drive (VFD) notes (see page 2.8 for Constant Torque Speed Ranges):
All 1HP+ motors require EP suffix in model number and can be used with a VFD, unless noted.
(-) = For Inverter Operation, starting condition may require ambient temperature of 5° C or higher.

Standard Mounting Selection Tables

15 HP (11 kW)

Standard Mounting Positions:

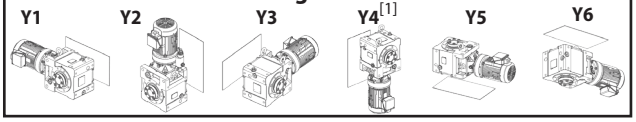

Dimension Pages:

Single Reduction	2.132-2.143
Single Reduction,Y2	2.144
Double Reduction	2.146-2.161
Double Reduction, Y2	2.162

Frequency	50 Hz	60 Hz
Input Speed	1450 RPM	1750 RPM
Number of Poles	4	

50Hz						60 Hz						Selection			
Output Speed (RPM)	Output Torque		Service Factor		Solid Shaft Overhung Load		Output Speed (RPM)	Output Torque		Service Factor		Solid Shaft Overhung Load		Base			VFD[2]
	in•lbs	(N•m)	SF	AGMA Class	lbs	(N)		in•lbs	(N•m)	SF	AGMA Class	lbs	(N)	Motor Power Code	Frame Size	Ratio	
11.8	72400	(8180)	0.87	-	13100	(58400)	14.3	60000	(6780)	1.04	I	16500	(73300)	15	**4D165**	123	
			1.01	I	13100	(58400)				1.07	I	16500	(73300)	15	**4D170**	123	
			1.07	I	13100	(58400)				1.07	I	16500	(73300)	15	**4D175**	123	
			1.07	I	13100	(58400)				1.29	I	16500	(73300)	15	**4D180**	123	
			1.31	I	20100	(89600)				1.37	I	20800	(92400)	15	**4E175**	123	
			1.42	II	20100	(89600)				1.71	II	20800	(92400)	15	**4E180**	123	
			1.42	II	20100	(89600)				1.71	II	20800	(92400)	15	**4E185**	123	
			1.68	II	29000	(129000)				1.71	II	29600	(132000)	15	**4F180**	123	
			2.05	III	29000	(129000)				2.05	III	29600	(132000)	15	**4F185**	123	
			2.20	III	29000	(129000)				2.21	III	29600	(132000)	15	**4F190**	123	(-)
			2.20	III	29000	(129000)				2.65	III	29600	(132000)	15	**4F195**	123	(-)
9.63	89000	(10100)	0.87	-	3350	(14900)	11.6	73700	(8330)	0.87	-	12700	(56400)	15	**4D175**	151	
			0.87	-	3350	(14900)				1.05	I	12700	(56400)	15	**4D180**	151	
			1.03	I	19300	(85800)				1.03	I	20100	(89300)	15	**4E175**	151	
			1.15	I	19300	(85800)				1.37	I	20100	(89300)	15	**4E180**	151	
			1.15	I	19300	(85800)				1.39	I	20100	(89300)	15	**4E185**	151	
			1.37	I	28300	(126000)				1.37	I	29000	(129000)	15	**4F180**	151	
			1.69	II	28300	(126000)				1.71	II	29000	(129000)	15	**4F185**	151	
			1.79	II	28300	(126000)				1.90	II	29000	(129000)	15	**4F190**	151	(-)
			1.79	II	28300	(126000)				2.16	III	29000	(129000)	15	**4F195**	151	(-)
8.12	106000	(11900)	0.90	-	17700	(78800)	9.80	87400	(9880)	0.97	-	19400	(86200)	15	**4E175**	179	
			0.97	-	17700	(78800)				1.09	I	19400	(86200)	15	**4E180**	179	
			0.97	-	17700	(78800)				1.17	I	19400	(86200)	15	**4E185**	179	
			1.09	I	27600	(123000)				1.09	I	28400	(126000)	15	**4F180**	179	
			1.37	I	27600	(123000)				1.37	I	28400	(126000)	15	**4F185**	179	
			1.51	II	27600	(123000)				1.65	II	28400	(126000)	15	**4F190**	179	
			1.51	II	27600	(123000)				1.82	II	28400	(126000)	15	**4F195**	179	
7.02	122000	(13800)	0.84	-	12200	(54300)	8.47	101000	(11400)	0.89	-	18700	(83100)	15	**4E180**	207	
			0.84	-	12200	(54300)				1.01	I	18700	(83100)	15	**4E185**	207	
			0.89	-	26900	(120000)				0.89	-	27800	(124000)	15	**4F180**	207	
			1.09	I	26900	(120000)				1.09	I	27800	(124000)	15	**4F185**	207	
			1.30	I	26900	(120000)				1.39	I	27800	(124000)	15	**4F190**	207	
			1.30	I	26900	(120000)				1.57	II	27800	(124000)	15	**4F195**	207	
5.84	147000	(16600)	0.89	-	25800	(115000)	7.04	122000	(13800)	0.89	-	26900	(120000)	15	**4F185**	249	
			1.08	I	25800	(115000)				1.23	I	26900	(120000)	15	**4F190**	249	
			1.08	I	25800	(115000)				1.31	I	26900	(120000)	15	**4F195**	249	
4.76	180000	(20300)	0.88	-	24400	(108000)	5.75	149000	(16900)	1.07	I	25700	(114000)	15	**4F190**	305	

Notes: [1] For Y4 Double Reductions (4XXXDX) refer to the above table; for Y4 single reduction refer to tables on pages 2.91-2.130.

[2] Variable Frequency Drive (VFD) notes (see page 2.8 for Constant Torque Speed Ranges):
All 1HP+ motors require EP suffix in model number and can be used with a VFD, unless noted.
(-) = For Inverter Operation, starting condition may require ambient temperature of 5° C or higher.

Standard Mounting Selection Tables

20 HP (15 kW)

Standard Mounting Positions:

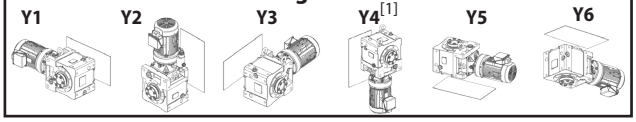

Dimension Pages:

Single Reduction	2.132-2.143
Single Reduction,Y2	2.144
Double Reduction	2.146-2.161
Double Reduction, Y2	2.162

Frequency	50 Hz	60 Hz
Input Speed	1450 RPM	1750 RPM
Number of Poles	4	

50Hz							60 Hz							Selection			
Output Speed (RPM)	Output Torque		Service Factor		Solid Shaft Overhung Load		Output Speed (RPM)	Output Torque		Service Factor		Solid Shaft Overhung Load		Base			VFD[2]
	in•lbs	(N•m)	SF	AGMA Class	lbs	(N)		in•lbs	(N•m)	SF	AGMA Class	lbs	(N)	Motor Power Code	Frame Size	Ratio	
138	8470	(956)	1.22	I	2940	(13100)	167	7010	(792)	1.35	I	2920	(13000)	20	**4A145**	11	
			1.47	II	4640	(20600)				1.47	II	4490	(20000)	20	**4B145**	11	
			1.69	II	4630	(20600)				1.69	II	4490	(20000)	20	**4B160**	11	
			1.93	II	4630	(20600)				1.93	II	4490	(20000)	20	**4B165**	11	
			2.00	III	6840	(30400)				2.00	III	6560	(29200)	20	**4C165**	11	
			2.77	III	6840	(30400)				2.77	III	6560	(29200)	20	**4C170**	11	(#)
			2.77	III	10400	(46100)				2.77	III	9880	(43900)	20	**4D170**	11	(#)
113	10300	(1170)	1.10	I	2930	(13000)	137	8550	(966)	1.11	I	2930	(13100)	20	**4A140**	13	
			1.27	I	4750	(21100)				1.27	I	4620	(20600)	20	**4B140**	13	
			1.47	II	4750	(21100)				1.47	II	4620	(20600)	20	**4B145**	13	
			1.69	II	4750	(21100)				1.69	II	4620	(20500)	20	**4B160**	13	
			1.93	II	4750	(21100)				1.93	II	4620	(20500)	20	**4B165**	13	
			2.00	III	7080	(31500)				2.00	III	6800	(30300)	20	**4C165**	13	
			2.77	III	7110	(31600)				2.77	III	6840	(30400)	20	**4C170**	13	(#)
			2.77	III	10900	(48300)				2.77	III	10400	(46100)	20	**4D170**	13	(#)
104	11300	(1280)	1.01	I	2910	(13000)	125	9350	(1060)	1.01	I	2940	(13100)	20	**4A140**	14	
			1.27	I	4810	(21400)				1.27	I	4690	(20900)	20	**4B140**	14	
			1.47	II	4810	(21400)				1.47	II	4690	(20900)	20	**4B145**	14	
			1.69	II	4800	(21400)				1.69	II	4680	(20800)	20	**4B160**	14	
			1.86	II	4800	(21400)				1.93	II	4680	(20800)	20	**4B165**	14	
			2.00	III	7210	(32100)				2.00	III	6940	(30900)	20	**4C165**	14	
			2.77	III	7240	(32200)				2.77	III	6970	(31000)	20	**4C170**	14	(#)
			2.77	III	11100	(49400)				2.77	III	10600	(47100)	20	**4D170**	14	(#)
90.6	12900	(1460)	1.27	I	4870	(21700)	109	10700	(1210)	1.27	I	4770	(21200)	20	**4B140**	16	
			1.47	II	4870	(21700)				1.47	II	4770	(21200)	20	**4B145**	16	
			1.67	II	4880	(21700)				1.76	II	4780	(21300)	20	**4B165**	16	
			2.00	III	7410	(33000)				2.00	III	7150	(31800)	20	**4C165**	16	
			2.77	III	7400	(32900)				2.77	III	7140	(31800)	20	**4C170**	16	(#)
			2.95	III	7400	(32900)				3.00	III	7140	(31800)	20	**4C175**	16	(#)
			2.77	III	11400	(50800)				2.77	III	10900	(48600)	20	**4D170**	16	(#)
82.9	14100	(1590)	1.27	I	4920	(21900)	100.0	11700	(1320)	1.27	I	4820	(21500)	20	**4B140**	18	
			1.47	II	4920	(21900)				1.47	II	4820	(21500)	20	**4B145**	18	
			1.58	II	4920	(21900)				1.61	II	4830	(21500)	20	**4B160**	18	
			1.69	II	7530	(33500)				1.69	II	7280	(32400)	20	**4C160**	18	
			2.00	III	7530	(33500)				2.00	III	7280	(32400)	20	**4C165**	18	
			2.76	III	7530	(33500)				2.77	III	7270	(32300)	20	**4C170**	18	(#)
			2.76	III	7530	(33500)				3.00	III	7270	(32300)	20	**4C175**	18	(#)
			2.77	III	11700	(51900)				2.77	III	11200	(49600)	20	**4D170**	18	(#)

Notes: [1] For Y4 Double Reductions (4XXXDX) refer to the above table; for Y4 single reduction refer to tables on pages 2.91-2.130..

[2] Variable Frequency Drive (VFD) notes (see page 2.8 for Constant Torque Speed Ranges):
All 1HP+ motors require EP suffix in model number and can be used with a VFD, unless noted.
(#) = Mounting positions Y2, F2, G2, K2, V2, W2 operation is limited to 75 %ED (duty cycle) for a 10 minute total cycle (7.5 minutes max. on time).

Standard Mounting Selection Tables

20 HP (15 kW)

Standard Mounting Positions:

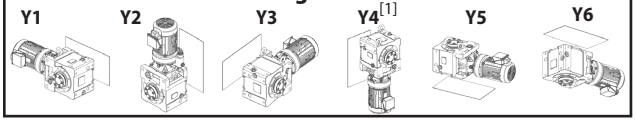

Dimension Pages:

Single Reduction	2.132-2.143
Single Reduction,Y2	2.144
Double Reduction	2.146-2.161
Double Reduction, Y2	2.162

Frequency	50 Hz	60 Hz
Input Speed	1450 RPM	1750 RPM
Number of Poles	4	

50Hz							60 Hz						Selection			
Output Speed (RPM)	Output Torque		Service Factor		Solid Shaft Overhung Load		Output Speed (RPM)	Output Torque		Service Factor		Solid Shaft Overhung Load		Base			VFD[2]
	in•lbs	*(N•m)*	SF	AGMA Class	lbs	*(N)*		in•lbs	*(N•m)*	SF	AGMA Class	lbs	*(N)*	Motor Power Code	Frame Size	Ratio	
69.0	16900	*(1910)*	1.01	I	4970	*(22100)*	83.3	14000	*(1580)*	1.01	I	4910	*(21900)*	20	**4B145**	21	
			1.34	I	4970	*(22100)*				1.34	I	4910	*(21900)*	20	**4B160**	21	
			1.69	II	7740	*(34400)*				1.69	II	7500	*(33400)*	20	**4C160**	21	
			2.00	III	7740	*(34400)*				2.00	III	7500	*(33400)*	20	**4C165**	21	
			2.26	III	7740	*(34400)*				2.26	III	7500	*(33400)*	20	**4C170**	21	
			2.40	III	7740	*(34400)*				2.40	III	7500	*(33400)*	20	**4C175**	21	
			2.77	III	12100	*(53900)*				2.77	III	11600	*(51700)*	20	**4D180**	21	(-),(#)
64.7	18100	*(2040)*	1.01	I	4980	*(22200)*	78.1	15000	*(1690)*	1.01	I	4940	*(22000)*	20	**4B145**	22	
			1.26	I	4980	*(22200)*				1.26	I	4940	*(22000)*	20	**4B160**	22	
			1.35	I	7820	*(34800)*				1.35	I	7590	*(33700)*	20	**4C160**	22	
			2.26	III	7820	*(34800)*				2.26	III	7590	*(33700)*	20	**4C170**	22	
			2.34	III	7820	*(34800)*				2.40	III	7590	*(33700)*	20	**4C175**	22	
			2.47	III	12300	*(54700)*				2.47	III	11800	*(52500)*	20	**4D175**	22	
			2.77	III	12300	*(54700)*				2.77	III	11800	*(52500)*	20	**4D180**	22	(-),(#)
59.2	19800	*(2230)*	1.01	I	4990	*(22200)*	71.4	16400	*(1850)*	1.01	I	4970	*(22100)*	20	**4B145**	25	
			1.15	I	4990	*(22200)*				1.15	I	4970	*(22100)*	20	**4B160**	25	
			1.35	I	7920	*(35200)*				1.35	I	7700	*(34300)*	20	**4C160**	25	
			1.61	II	7920	*(35200)*				1.61	II	7700	*(34300)*	20	**4C165**	25	
			2.15	III	7920	*(35200)*				2.30	III	7700	*(34300)*	20	**4C175**	25	
			2.26	III	12500	*(55800)*				2.26	III	12000	*(53500)*	20	**4D170**	25	
			2.47	III	12500	*(55800)*				2.47	III	12000	*(53500)*	20	**4D175**	25	
			2.77	III	12500	*(55800)*				2.77	III	12000	*(53500)*	20	**4D180**	25	(-),(#)
51.8	22600	*(2550)*	1.01	I	4980	*(22100)*	62.5	18700	*(2110)*	1.01	I	4990	*(22200)*	20	**4B145**	28	
			1.31	I	8050	*(35800)*				1.31	I	7860	*(35000)*	20	**4C160**	28	
			1.61	II	8050	*(35800)*				1.61	II	7860	*(35000)*	20	**4C165**	28	
			1.96	II	8050	*(35800)*				2.02	III	7860	*(35000)*	20	**4C170**	28	
			2.26	III	12900	*(57300)*				2.26	III	12400	*(55100)*	20	**4D170**	28	
			2.47	III	12900	*(57300)*				2.47	III	12400	*(55100)*	20	**4D175**	28	
			2.77	III	12900	*(57300)*				2.77	III	12400	*(55100)*	20	**4D180**	28	(-),(#)
			2.77	III	17200	*(76600)*				2.77	III	16500	*(73200)*	20	**4E180**	28	(-),(#)
41.2	28400	*(3210)*	1.01	I	8220	*(36600)*	49.7	23500	*(2660)*	1.01	I	8080	*(36000)*	20	**4C145**	35	
			1.31	I	8220	*(36600)*				1.31	I	8080	*(36000)*	20	**4C160**	35	
			1.60	II	8220	*(36600)*				1.60	II	8080	*(36000)*	20	**4C165**	35	
			1.84	II	13500	*(59900)*				1.84	II	13000	*(57800)*	20	**4D170**	35	
			2.01	III	13500	*(59900)*				2.01	III	13000	*(57800)*	20	**4D175**	35	
			2.65	III	13500	*(59900)*				2.77	III	13000	*(57800)*	20	**4D180**	35	(-),(#)
			2.77	III	18100	*(80700)*				2.77	III	17400	*(77300)*	20	**4E180**	35	(-),(#)

Notes: [1] For Y4 Double Reductions (4XXXDX) refer to the above table; for Y4 single reduction refer to tables on pages 2.91-2.130.

[2] Variable Frequency Drive (VFD) notes (see page 2.8 for Constant Torque Speed Ranges):
All 1HP+ motors require EP suffix in model number and can be used with a VFD, unless noted.
(-) = For Inverter Operation, starting condition may require ambient temperature of 5° C or higher.
(#) = Mounting positions Y2, F2, G2, K2, V2, W2 operation is limited to 75 %ED (duty cycle) for a 10 minute total cycle (7.5 minutes max. on time).

Standard Mounting Selection Tables

20 HP (15 kW)

Standard Mounting Positions:

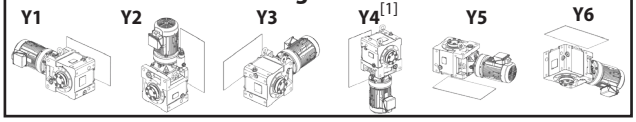

Dimension Pages:

Single Reduction	2.132-2.143
Single Reduction,Y2	2.144
Double Reduction	2.146-2.161
Double Reduction, Y2	2.162

Frequency	50 Hz	60 Hz
Input Speed	1450 RPM	1750 RPM
Number of Poles	4	

50Hz							60 Hz							Selection			
Output Speed (RPM)	Output Torque		Service Factor		Solid Shaft Overhung Load		Output Speed (RPM)	Output Torque		Service Factor		Solid Shaft Overhung Load		Base			VFD[2]
	in•lbs	(N•m)	SF	AGMA Class	lbs	(N)		in•lbs	(N•m)	SF	AGMA Class	lbs	(N)	Motor Power Code	Frame Size	Ratio	
37.7	31000	(3510)	1.01	I	8270	(36800)	45.5	25700	(2910)	1.01	I	8160	(36300)	20	**4C145**	39	
			1.31	I	8270	(36800)				1.31	I	8160	(36300)	20	**4C160**	39	
			1.43	II	8270	(36800)				1.47	II	8160	(36300)	20	**4C165**	39	
			1.61	II	13700	(60900)				1.61	II	13200	(58800)	20	**4D165**	39	
			1.84	II	13700	(60900)				1.84	II	13200	(58800)	20	**4D170**	39	
			2.01	III	13700	(60900)				2.01	III	13200	(58800)	20	**4D175**	39	
			2.44	III	13700	(60900)				2.77	III	13200	(58800)	20	**4D180**	39	(-)
			2.77	III	18500	(82200)				2.77	III	17700	(78900)	20	**4E180**	39	(-)
			2.80	III	18500	(82200)				3.00	III	17700	(78900)	20	**4E185**	39	(-)
			2.80	III	18500	(82200)				3.37	III	17700	(78900)	20	**4E190**	39	(-)
			2.80	III	18500	(82200)				3.38	III	17700	(78900)	20	**4E195**	39	(-)
			2.77	III	30800	(137000)				2.77	III	30800	(137000)	20	**4F180**	39	(-)
31.9	36700	(4140)	1.01	I	8310	(37000)	38.5	30400	(3430)	1.01	I	8260	(36700)	20	**4C145**	46	
			1.21	I	8310	(37000)				1.24	I	8260	(36700)	20	**4C160**	46	
			1.31	I	14100	(62500)				1.31	I	13600	(60600)	20	**4D160**	46	
			1.51	II	14100	(62500)				1.51	II	13600	(60600)	20	**4D165**	46	
			1.82	II	14100	(62500)				1.82	II	13600	(60600)	20	**4D170**	46	
			2.01	III	14100	(62500)				2.01	III	13600	(60600)	20	**4D175**	46	
			2.10	III	14100	(62500)				2.48	III	13600	(60600)	20	**4D180**	46	(-)
			2.37	III	19100	(85200)				2.77	III	18400	(81900)	20	**4E180**	46	(-)
			2.37	III	19100	(85200)				2.86	III	18400	(81900)	20	**4E185**	46	(-)
			2.37	III	19100	(85200)				2.86	III	18400	(81900)	20	**4E190**	46	(-)
			2.37	III	19100	(85200)				2.86	III	18400	(81900)	20	**4E195**	46	(-)
			2.77	III	30600	(136000)				2.77	III	30900	(137000)	20	**4F180**	46	(-)
27.6	42300	(4780)	0.96	-	8290	(36900)	33.3	35100	(3960)	0.97	-	8300	(36900)	20	**4C145**	53	
			1.05	I	8290	(36900)				1.07	I	8300	(36900)	20	**4C160**	53	
			1.25	I	14400	(63800)				1.25	I	14000	(62100)	20	**4D160**	53	
			1.49	II	14400	(63800)				1.51	II	14000	(62100)	20	**4D165**	53	
			1.70	II	14400	(63800)				1.70	II	14000	(62100)	20	**4D170**	53	
			1.82	II	14400	(63800)				1.82	II	14000	(62100)	20	**4D175**	53	
			1.82	II	14400	(63800)				2.16	III	14000	(62100)	20	**4D180**	53	(-)
			2.01	III	19700	(87600)				2.01	III	19000	(84400)	20	**4E175**	53	
			2.06	III	19700	(87600)				2.16	III	19000	(84400)	20	**4E180**	53	(-)
			2.06	III	19700	(87600)				2.48	III	19000	(84400)	20	**4E185**	53	(-)
			2.06	III	19700	(87600)				2.48	III	19000	(84400)	20	**4E190**	53	(-)
			2.06	III	19700	(87600)				2.48	III	19000	(84400)	20	**4E195**	53	(-)
			2.16	III	30300	(135000)				2.16	III	30700	(136000)	20	**4F180**	53	(-)
			2.60	III	30300	(135000)				2.60	III	30700	(136000)	20	**4F185**	53	(-)

Notes: [1] For Y4 Double Reductions (4XXXDX) refer to the above table; for Y4 single reduction refer to tables on pages 2.91-2.130..

[2] Variable Frequency Drive (VFD) notes (see page 2.8 for Constant Torque Speed Ranges):
All 1HP+ motors require EP suffix in model number and can be used with a VFD, unless noted.
(-) = For Inverter Operation, starting condition may require ambient temperature of 5° C or higher.

Standard Mounting Selection Tables

20 HP (15 kW)

Standard Mounting Positions:

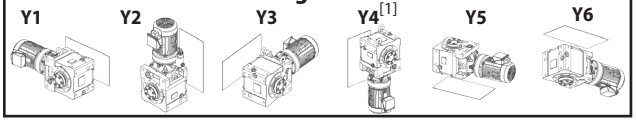

Dimension Pages:

Single Reduction	2.132-2.143
Single Reduction,Y2	2.144
Double Reduction	2.146-2.161
Double Reduction, Y2	2.162

Frequency	50 Hz	60 Hz
Input Speed	1450 RPM	1750 RPM
Number of Poles	4	

50Hz							60 Hz							Selection			
Output Speed (RPM)	Output Torque		Service Factor		Solid Shaft Overhung Load		Output Speed (RPM)	Output Torque		Service Factor		Solid Shaft Overhung Load		Base			VFD[2]
	in•lbs	*(N•m)*	SF	AGMA Class	lbs	*(N)*		in•lbs	*(N•m)*	SF	AGMA Class	lbs	*(N)*	Motor Power Code	Frame Size	Ratio	
24.4	48000	*(5420)*	1.25	I	14600	*(64800)*	29.4	39700	*(4490)*	1.25	I	14200	*(63300)*	20	**4D165**	60	
			1.31	I	14600	*(64800)*				1.31	I	14200	*(63300)*	20	**4D170**	60	
			1.61	II	14600	*(64800)*				1.61	II	14200	*(63300)*	20	**4D175**	60	
			1.61	II	14600	*(64800)*				1.94	II	14200	*(63300)*	20	**4D180**	60	
			1.81	II	20100	*(89600)*				2.04	III	19400	*(86500)*	20	**4E180**	60	
			1.81	II	20100	*(89600)*				2.19	III	19400	*(86500)*	20	**4E185**	60	
			1.81	II	20100	*(89600)*				2.19	III	19400	*(86500)*	20	**4E190**	60	(-)
			1.81	II	20100	*(89600)*				2.19	III	19400	*(86500)*	20	**4E195**	60	(-)
			2.04	III	30100	*(134000)*				2.04	III	30400	*(135000)*	20	**4F180**	60	
			2.55	III	30100	*(134000)*				2.60	III	30400	*(135000)*	20	**4F185**	60	
21.6	54200	*(6120)*	1.07	I	14800	*(65700)*	26.0	44900	*(5070)*	1.07	I	14500	*(64300)*	20	**4D165**	67	
			1.24	I	14800	*(65700)*				1.30	I	14500	*(64300)*	20	**4D170**	67	
			1.42	II	14800	*(65700)*				1.42	II	14500	*(64300)*	20	**4D175**	67	
			1.42	II	14800	*(65700)*				1.72	II	14500	*(64300)*	20	**4D180**	67	
			1.57	II	20600	*(91500)*				1.61	II	19900	*(88500)*	20	**4E175**	67	
			1.61	II	20600	*(91500)*				1.94	II	19900	*(88500)*	20	**4E180**	67	
			1.61	II	20600	*(91500)*				1.94	II	19900	*(88500)*	20	**4E185**	67	
			1.61	II	20600	*(91500)*				1.94	II	19900	*(88500)*	20	**4E190**	67	(-)
			1.61	II	20600	*(91500)*				1.94	II	19900	*(88500)*	20	**4E195**	67	(-)
			2.00	III	29800	*(133000)*				2.00	III	30200	*(134000)*	20	**4F180**	67	
			2.54	III	29800	*(133000)*				2.60	III	30200	*(134000)*	20	**4F185**	67	
			2.73	III	29800	*(133000)*				2.73	III	30200	*(134000)*	20	**4F190**	67	(-)
			2.94	III	29800	*(133000)*				3.21	III	30200	*(134000)*	20	**4F195**	67	(-)
19.7	59300	*(6690)*	1.07	I	14900	*(66200)*	23.8	49100	*(5550)*	1.07	I	14600	*(65000)*	20	**4D165**	74	
			1.24	I	14900	*(66200)*				1.30	I	14600	*(65000)*	20	**4D170**	74	
			1.30	I	14900	*(66200)*				1.30	I	14600	*(65000)*	20	**4D175**	74	
			1.30	I	14900	*(66200)*				1.57	II	14600	*(65000)*	20	**4D180**	74	
			1.47	II	20800	*(92500)*				1.47	II	20200	*(90000)*	20	**4E175**	74	
			1.47	II	20800	*(92500)*				1.77	II	20200	*(90000)*	20	**4E180**	74	
			1.47	II	20800	*(92500)*				1.77	II	20200	*(90000)*	20	**4E185**	74	
			1.47	II	20800	*(92500)*				1.77	II	20200	*(90000)*	20	**4E190**	74	(-)
			1.47	II	20800	*(92500)*				1.77	II	20200	*(90000)*	20	**4E195**	74	(-)
			2.00	III	29600	*(132000)*				2.00	III	30000	*(134000)*	20	**4F180**	74	
			2.54	III	29600	*(132000)*				2.60	III	30000	*(134000)*	20	**4F185**	74	
			2.69	III	29600	*(132000)*				2.73	III	30000	*(134000)*	20	**4F190**	74	(-)
			2.69	III	29600	*(132000)*				3.21	III	30000	*(134000)*	20	**4F195**	74	(-)

Notes: [1] For Y4 Double Reductions (4XXXDX) refer to the above table; for Y4 single reduction refer to tables on pages 2.91-2.130.
[2] Variable Frequency Drive (VFD) notes (see page 2.8 for Constant Torque Speed Ranges):
All 1HP+ motors require EP suffix in model number and can be used with a VFD, unless noted.
(-) = For Inverter Operation, starting condition may require ambient temperature of 5° C or higher.

Standard Mounting Selection Tables

20 HP (15 kW)

Standard Mounting Positions:

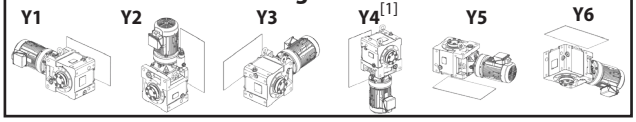

Dimension Pages:

Single Reduction	2.132-2.143
Single Reduction,Y2	2.144
Double Reduction	2.146-2.161
Double Reduction, Y2	2.162

Frequency	50 Hz	60 Hz
Input Speed	1450 RPM	1750 RPM
Number of Poles	4	

50Hz							60 Hz							Selection			
Output Speed (RPM)	Output Torque		Service Factor		Solid Shaft Overhung Load		Output Speed (RPM)	Output Torque		Service Factor		Solid Shaft Overhung Load		Base			VFD[2]
	in•lbs	(N•m)	SF	AGMA Class	lbs	(N)		in•lbs	(N•m)	SF	AGMA Class	lbs	(N)	Motor Power Code	Frame Size	Ratio	
18.1	64500	(7290)	1.04	I	15000	(66500)	21.9	53400	(6040)	1.05	I	14700	(65600)	20	**4D170**	80	
			1.20	I	15000	(66500)				1.20	I	14700	(65600)	20	**4D175**	80	
			1.20	I	15000	(66500)				1.44	II	14700	(65600)	20	**4D180**	80	
			1.30	I	20500	(91400)				1.30	I	20500	(91300)	20	**4E175**	80	
			1.35	I	20500	(91400)				1.61	II	20500	(91300)	20	**4E180**	80	
			1.35	I	20500	(91400)				1.63	II	20500	(91300)	20	**4E185**	80	
			1.35	I	20500	(91400)				1.63	II	20500	(91300)	20	**4E190**	80	(-)
			1.35	I	20500	(91400)				1.63	II	20500	(91300)	20	**4E195**	80	(-)
			1.61	II	29400	(131000)				1.61	II	29900	(133000)	20	**4F180**	80	
			2.01	III	29400	(131000)				2.01	III	29900	(133000)	20	**4F185**	80	
			2.35	III	29400	(131000)				2.35	III	29900	(133000)	20	**4F190**	80	(-)
			2.47	III	29400	(131000)				2.70	III	29900	(133000)	20	**4F195**	80	(-)
16.6	70500	(7970)	0.90	-	13700	(61100)	20.0	58400	(6600)	1.01	I	14900	(66100)	20	**4D165**	88	
			1.04	I	13700	(61100)				1.05	I	14900	(66100)	20	**4D170**	88	
			1.09	I	13700	(61100)				1.09	I	14900	(66100)	20	**4D175**	88	
			1.09	I	13700	(61100)				1.32	I	14900	(66100)	20	**4D180**	88	
			1.23	I	20200	(90000)				1.23	I	20800	(92600)	20	**4E175**	88	
			1.23	I	20200	(90000)				1.49	II	20800	(92600)	20	**4E180**	88	
			1.23	I	20200	(90000)				1.49	II	20800	(92600)	20	**4E185**	88	
			1.23	I	20200	(90000)				1.49	II	20800	(92600)	20	**4E190**	88	(-)
			1.23	I	20200	(90000)				1.49	II	20800	(92600)	20	**4E195**	88	(-)
			1.61	II	29100	(130000)				1.61	II	29600	(132000)	20	**4F180**	88	
			2.01	III	29100	(130000)				2.01	III	29600	(132000)	20	**4F185**	88	
			2.26	III	29100	(130000)				2.35	III	29600	(132000)	20	**4F190**	88	(-)
			2.26	III	29100	(130000)				2.70	III	29600	(132000)	20	**4F195**	88	(-)
14.3	81800	(9250)	0.94	-	9220	(41000)	17.2	67800	(7660)	0.94	-	14500	(64700)	20	**4D175**	102	
			0.94	-	9220	(41000)				1.14	I	14500	(64700)	20	**4D180**	102	
			1.06	I	19700	(87400)				1.06	I	20400	(90600)	20	**4E175**	102	
			1.06	I	19700	(87400)				1.28	I	20400	(90600)	20	**4E180**	102	
			1.06	I	19700	(87400)				1.28	I	20400	(90600)	20	**4E185**	102	
			1.06	I	19700	(87400)				1.28	I	20400	(90600)	20	**4E190**	102	
			1.06	I	19700	(87400)				1.28	I	20400	(90600)	20	**4E195**	102	
			1.30	I	28600	(127000)				1.30	I	29200	(130000)	20	**4F180**	102	
			1.61	II	28600	(127000)				1.61	II	29200	(130000)	20	**4F185**	102	
			1.95	II	28600	(127000)				2.05	III	29200	(130000)	20	**4F190**	102	
			1.95	II	28600	(127000)				2.35	III	29200	(130000)	20	**4F195**	102	

Notes: [1] For Y4 Double Reductions (4XXXDX) refer to the above table; for Y4 single reduction refer to tables on pages 2.91-2.130..

[2] Variable Frequency Drive (VFD) notes (see page 2.8 for Constant Torque Speed Ranges):
All 1HP+ motors require EP suffix in model number and can be used with a VFD, unless noted.
(-) = For Inverter Operation, starting condition may require ambient temperature of 5° C or higher.

Standard Mounting Selection Tables

20 HP (15 kW)

Standard Mounting Positions:

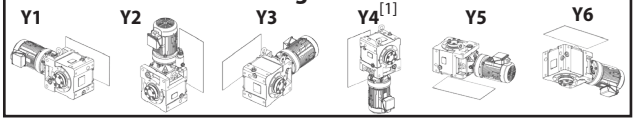

Dimension Pages:

Single Reduction	2.132-2.143
Single Reduction,Y2	2.144
Double Reduction	2.146-2.161
Double Reduction, Y2	2.162

Frequency	50 Hz	60 Hz
Input Speed	1450 RPM	1750 RPM
Number of Poles	4	

50Hz						60 Hz						Selection			
Output Speed (RPM)	Output Torque		Service Factor		Solid Shaft Overhung Load		Output Speed (RPM)	Output Torque		Service Factor		Solid Shaft Overhung Load		Base			VFD[2]
	in•lbs	(N•m)	SF	AGMA Class	lbs	(N)		in•lbs	(N•m)	SF	AGMA Class	lbs	(N)	Motor Power Code	Frame Size	Ratio	
12.9	90300	(10200)	0.85	-	-	-	15.6	74800	(8450)	1.03	I	12300	(54700)	20	**4D180**	112	
			0.96	-	19200	(85500)				1.01	I	20000	(89000)	20	**4E175**	112	
			1.14	I	19200	(85500)				1.25	I	20000	(89000)	20	**4E180**	112	
			1.14	I	19200	(85500)				1.37	I	20000	(89000)	20	**4E185**	112	
			1.23	I	28300	(126000)				1.25	I	28900	(129000)	20	**4F180**	112	
			1.51	II	28300	(126000)				1.51	II	28900	(129000)	20	**4F185**	112	
			1.62	II	28300	(126000)				1.62	II	28900	(129000)	20	**4F190**	112	
			1.76	II	28300	(126000)				2.01	III	28900	(129000)	20	**4F195**	112	
11.8	98800	(11200)	0.96	-	18800	(83600)	14.3	81800	(9250)	1.01	I	19700	(87400)	20	**4E175**	123	
			1.04	I	18800	(83600)				1.25	I	19700	(87400)	20	**4E180**	123	
			1.04	I	18800	(83600)				1.25	I	19700	(87400)	20	**4E185**	123	
			1.23	I	27900	(124000)				1.25	I	28600	(127000)	20	**4F180**	123	
			1.51	II	27900	(124000)				1.51	II	28600	(127000)	20	**4F185**	123	
			1.61	II	27900	(124000)				1.62	II	28600	(127000)	20	**4F190**	123	
			1.61	II	27900	(124000)				1.95	II	28600	(127000)	20	**4F195**	123	
9.63	121000	(13700)	0.85	-	12500	(55800)	11.6	101000	(11400)	1.01	I	18700	(83200)	20	**4E180**	151	
			0.85	-	12500	(55800)				1.02	I	18700	(83200)	20	**4E185**	151	
			1.00	I	26900	(120000)				1.01	I	27800	(124000)	20	**4F180**	151	
			1.24	I	26900	(120000)				1.25	I	27800	(124000)	20	**4F185**	151	
			1.31	I	26900	(120000)				1.39	I	27800	(124000)	20	**4F190**	151	
			1.31	I	26900	(120000)				1.58	II	27800	(124000)	20	**4F195**	151	
8.12	144000	(16300)	1.01	I	25900	(115000)	9.80	119000	(13500)	1.01	I	27000	(120000)	20	**4F185**	179	
			1.11	I	25900	(115000)				1.21	I	27000	(120000)	20	**4F190**	179	
			1.11	I	25900	(115000)				1.34	I	27000	(120000)	20	**4F195**	179	
7.02	166000	(18800)	0.96	-	25000	(111000)	8.47	138000	(15600)	1.02	I	26200	(117000)	20	**4F190**	207	
			0.96	-	25000	(111000)				1.15	I	26200	(117000)	20	**4F195**	207	

Sold & Serviced By:
ELECTROMATE
Toll Free Phone (877) SERVO98
www.electromate.com
sales@electromate.com

Notes: [1] For Y4 Double Reductions (4XXXDX) refer to the above table; for Y4 single reduction refer to tables on pages 2.91-2.130.
[2] Variable Frequency Drive (VFD) notes (see page 2.8 for Constant Torque Speed Ranges):
All 1HP+ motors require EP suffix in model number and can be used with a VFD, unless noted.

Standard Mounting Selection Tables

25 HP (18.5 kW)

Standard Mounting Positions:

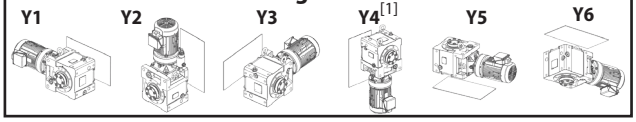

Dimension Pages:

Single Reduction	2.132-2.143
Single Reduction,Y2	2.144
Double Reduction	2.146-2.161
Double Reduction, Y2	2.162

Frequency	50 Hz	60 Hz
Input Speed	1450 RPM	1750 RPM
Number of Poles	4	

50Hz							60 Hz							Selection			
Output Speed (RPM)	Output Torque		Service Factor		Solid Shaft Overhung Load		Output Speed (RPM)	Output Torque		Service Factor		Solid Shaft Overhung Load		Base			VFD[2]
	in•lbs	(N•m)	SF	AGMA Class	lbs	(N)		in•lbs	(N•m)	SF	AGMA Class	lbs	(N)	Motor Power Code	Frame Size	Ratio	
138	10400	(1180)	1.37	I	4410	(19600)	167	8650	(977)	1.37	I	4310	(19200)	25	**4B160**	11	
			1.57	II	4410	(19600)				1.57	II	4310	(19200)	25	**4B165**	11	
			1.62	II	6640	(29600)				1.62	II	6400	(28500)	25	**4C165**	11	
			2.24	III	6650	(29600)				2.24	III	6400	(28500)	25	**4C170**	11	(#)
			2.43	III	6650	(29600)				2.43	III	6400	(28500)	25	**4C175**	11	(#)
			2.24	III	10200	(45400)				2.24	III	9740	(43300)	25	**4D170**	11	(#)
			2.43	III	10200	(45400)				2.43	III	9740	(43300)	25	**4D175**	11	(#)
			2.89	III	10100	(45000)				2.89	III	9660	(43000)	25	**4D180**	11	(-),(#)
113	12700	(1440)	1.37	I	4490	(20000)	137	10500	(1190)	1.37	I	4400	(19600)	25	**4B160**	13	
			1.57	II	4490	(20000)				1.57	II	4400	(19600)	25	**4B165**	13	
			1.62	II	6850	(30500)				1.62	II	6610	(29400)	25	**4C165**	13	
			2.24	III	6880	(30600)				2.24	III	6640	(29500)	25	**4C170**	13	(#)
			2.43	III	6880	(30600)				2.43	III	6640	(29500)	25	**4C175**	13	(#)
			2.24	III	10700	(47400)				2.24	III	10200	(45400)	25	**4D170**	13	(#)
			2.43	III	10700	(47400)				2.43	III	10200	(45400)	25	**4D175**	13	(#)
			2.89	III	10700	(47400)				2.89	III	10200	(45400)	25	**4D180**	13	(-),(#)
104	13900	(1570)	1.37	I	4520	(20100)	125	11500	(1300)	1.37	I	4450	(19800)	25	**4B160**	14	
			1.51	II	4520	(20100)				1.57	II	4450	(19800)	25	**4B165**	14	
			1.62	II	6960	(30900)				1.62	II	6730	(29900)	25	**4C165**	14	
			2.24	III	6980	(31100)				2.24	III	6760	(30100)	25	**4C170**	14	(#)
			2.43	III	6980	(31100)				2.43	III	6760	(30100)	25	**4C175**	14	(#)
			2.24	III	10900	(48400)				2.24	III	10400	(46300)	25	**4D170**	14	(#)
			2.43	III	10900	(48400)				2.43	III	10400	(46300)	25	**4D175**	14	(#)
			2.89	III	10900	(48400)				2.89	III	10400	(46300)	25	**4D180**	14	(-),(#)
90.6	15900	(1800)	1.35	I	4550	(20200)	109	13200	(1490)	1.43	II	4510	(20000)	25	**4B165**	16	
			1.62	II	7120	(31700)				1.62	II	6910	(30700)	25	**4C165**	16	
			2.24	III	7120	(31700)				2.24	III	6900	(30700)	25	**4C170**	16	(#)
			2.39	III	7120	(31700)				2.43	III	6900	(30700)	25	**4C175**	16	(#)
			2.24	III	11200	(49700)				2.24	III	10700	(47700)	25	**4D170**	16	(#)
			2.43	III	11200	(49700)				2.43	III	10700	(47700)	25	**4D175**	16	(#)
			2.89	III	11100	(49400)				2.89	III	10600	(47300)	25	**4D180**	16	(-),(#)

Notes: [1] For Y4 Double Reductions (4XXXDX) refer to the above table; for Y4 single reduction refer to tables on pages 2.91-2.130..

[2] Variable Frequency Drive (VFD) notes (see page 2.8 for Constant Torque Speed Ranges):
All 1HP+ motors require EP suffix in model number and can be used with a VFD, unless noted.
(-) = For Inverter Operation, starting condition may require ambient temperature of 5° C or higher.
(#) = Mounting positions Y2, F2, G2, K2, V2, W2 operation is limited to 75 %ED (duty cycle) for a 10 minute total cycle (7.5 minutes max. on time).

Standard Mounting Selection Tables

25 HP (18.5 kW)

Standard Mounting Positions:

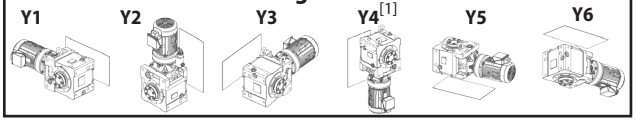

Dimension Pages:

Single Reduction	2.132-2.143
Single Reduction,Y2	2.144
Double Reduction	2.146-2.161
Double Reduction, Y2	2.162

Frequency	50 Hz	60 Hz
Input Speed	1450 RPM	1750 RPM
Number of Poles	4	

50Hz							60 Hz							Selection			
Output Speed (RPM)	Output Torque		Service Factor		Solid Shaft Overhung Load		Output Speed (RPM)	Output Torque		Service Factor		Solid Shaft Overhung Load		Base			VFD[2]
	in•lbs	(N•m)	SF	AGMA Class	lbs	(N)		in•lbs	(N•m)	SF	AGMA Class	lbs	(N)	Motor Power Code	Frame Size	Ratio	
82.9	17400	(1970)	1.28	I	4560	(20300)	100.0	14400	(1630)	1.31	I	4530	(20200)	25	**4B160**	18	
			1.37	I	7220	(32100)				1.37	I	7010	(31200)	25	**4C160**	18	
			1.62	II	7220	(32100)				1.62	II	7010	(31200)	25	**4C165**	18	
			2.24	III	7210	(32100)				2.24	III	7010	(31200)	25	**4C170**	18	(#)
			2.24	III	7210	(32100)				2.43	III	7010	(31200)	25	**4C175**	18	(#)
			2.24	III	11400	(50700)				2.24	III	10900	(48600)	25	**4D170**	18	(#)
			2.43	III	11400	(50700)				2.43	III	10900	(48600)	25	**4D175**	18	(#)
			2.89	III	11300	(50300)				2.89	III	10900	(48300)	25	**4D180**	18	(-),(#)
69.0	20900	(2360)	1.09	I	4550	(20200)	83.3	17300	(1950)	1.09	I	4560	(20300)	25	**4B160**	21	
			1.37	I	7370	(32800)				1.37	I	7190	(32000)	25	**4C160**	21	
			1.62	II	7370	(32800)				1.62	II	7190	(32000)	25	**4C165**	21	
			1.83	II	7370	(32800)				1.83	II	7190	(32000)	25	**4C170**	21	
			1.95	II	7370	(32800)				1.95	II	7190	(32000)	25	**4C175**	21	
			2.00	III	11800	(52500)				2.00	III	11400	(50500)	25	**4D175**	21	
			2.24	III	11800	(52500)				2.24	III	11400	(50500)	25	**4D180**	21	(-),(#)
			2.43	III	11800	(52500)				2.43	III	11400	(50500)	25	**4D185**	21	(-),(#)
			2.74	III	15800	(70200)				2.74	III	15100	(67100)	25	**4E190**	21	(-),(#)
			2.97	III	15800	(70200)				2.97	III	15100	(67100)	25	**4E195**	21	(-),(#)
64.7	22300	(2520)	1.02	I	4530	(20100)	78.1	18500	(2090)	1.02	I	4560	(20300)	25	**4B160**	22	
			1.10	I	7420	(33000)				1.10	I	7260	(32300)	25	**4C160**	22	
			1.30	I	7420	(33000)				1.30	I	7260	(32300)	25	**4C165**	22	
			1.83	II	7420	(33000)				1.83	II	7260	(32300)	25	**4C170**	22	
			2.00	III	12000	(53200)				2.00	III	11500	(51200)	25	**4D175**	22	
			2.24	III	12000	(53200)				2.24	III	11500	(51200)	25	**4D180**	22	(-),(#)
			2.43	III	12000	(53200)				2.43	III	11500	(51200)	25	**4D185**	22	(-),(#)
			2.74	III	16000	(71200)				2.74	III	15300	(68200)	25	**4E190**	22	(-),(#)
			2.97	III	16000	(71200)				2.97	III	15300	(68200)	25	**4E195**	22	(-),(#)
59.2	24400	(2750)	0.93	-	4490	(20000)	71.4	20200	(2280)	0.93	-	4550	(20300)	25	**4B160**	25	
			1.10	I	7480	(33300)				1.10	I	7340	(32600)	25	**4C160**	25	
			1.30	I	7480	(33300)				1.30	I	7340	(32600)	25	**4C165**	25	
			1.75	II	7480	(33300)				1.87	II	7340	(32600)	25	**4C175**	25	
			1.83	II	12200	(54100)				1.83	II	11700	(52200)	25	**4D170**	25	
			2.00	III	12200	(54100)				2.00	III	11700	(52200)	25	**4D175**	25	
			2.24	III	12200	(54100)				2.24	III	11700	(52200)	25	**4D180**	25	(-),(#)
			2.43	III	12200	(54100)				2.43	III	11700	(52200)	25	**4D185**	25	(-),(#)
			2.43	III	16300	(72700)				2.43	III	15700	(69600)	25	**4E185**	25	(-),(#)
			2.74	III	16300	(72700)				2.74	III	15700	(69600)	25	**4E190**	25	(-),(#)
			2.97	III	16300	(72700)				2.97	III	15700	(69600)	25	**4E195**	25	(-),(#)

Notes: [1] For Y4 Double Reductions (4XXXDX) refer to the above table; for Y4 single reduction refer to tables on pages 2.91-2.130.

[2] Variable Frequency Drive (VFD) notes (see page 2.8 for Constant Torque Speed Ranges):
All 1HP+ motors require EP suffix in model number and can be used with a VFD, unless noted.
(-) = For Inverter Operation, starting condition may require ambient temperature of 5° C or higher.
(#) = Mounting positions Y2, F2, G2, K2, V2, W2 operation is limited to 75 %ED (duty cycle) for a 10 minute total cycle (7.5 minutes max. on time).

Standard Mounting Selection Tables

25 HP (18.5 kW)

Standard Mounting Positions:

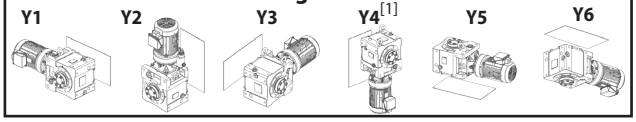

Dimension Pages:

Single Reduction	2.132-2.143
Single Reduction,Y2	2.144
Double Reduction	2.146-2.161
Double Reduction, Y2	2.162

Frequency	50 Hz	60 Hz
Input Speed	1450 RPM	1750 RPM
Number of Poles	4	

50Hz							60 Hz							Selection			
Output Speed (RPM)	Output Torque		Service Factor		Solid Shaft Overhung Load		Output Speed (RPM)	Output Torque		Service Factor		Solid Shaft Overhung Load		Base			VFD[2]
	in•lbs	(N•m)	SF	AGMA Class	lbs	(N)		in•lbs	(N•m)	SF	AGMA Class	lbs	(N)	Motor Power Code	Frame Size	Ratio	
51.8	27800	(3150)	1.06	I	7550	(33600)	62.5	23100	(2610)	1.06	I	7440	(33100)	25	**4C160**	28	
			1.30	I	7550	(33600)				1.30	I	7440	(33100)	25	**4C165**	28	
			1.59	II	7550	(33600)				1.63	II	7440	(33100)	25	**4C170**	28	
			1.83	II	12500	(55400)				1.83	II	12000	(53600)	25	**4D170**	28	
			2.00	III	12500	(55400)				2.00	III	12000	(53600)	25	**4D175**	28	
			2.24	III	12500	(55400)				2.24	III	12000	(53600)	25	**4D180**	28	(-),(#)
			2.43	III	12500	(55400)				2.43	III	12000	(53600)	25	**4D185**	28	(-),(#)
			2.24	III	16800	(74900)				2.24	III	16100	(71800)	25	**4E180**	28	(-),(#)
			2.43	III	16800	(74900)				2.43	III	16100	(71800)	25	**4E185**	28	(-),(#)
			2.74	III	16800	(74900)				2.74	III	16100	(71800)	25	**4E190**	28	(-),(#)
			2.97	III	16800	(74900)				2.97	III	16100	(71800)	25	**4E195**	28	(-),(#)
			2.97	III	29400	(131000)				2.97	III	28000	(124000)	25	**4F195**	28	(-),(#)
41.2	35000	(3950)	1.06	I	7590	(33800)	49.7	29000	(3280)	1.06	I	7560	(33600)	25	**4C160**	35	
			1.30	I	7590	(33800)				1.30	I	7560	(33600)	25	**4C165**	35	
			1.49	II	12900	(57500)				1.49	II	12600	(55800)	25	**4D170**	35	
			1.63	II	12900	(57500)				1.63	II	12600	(55800)	25	**4D175**	35	
			2.15	III	12900	(57500)				2.24	III	12600	(55800)	25	**4D180**	35	(#)
			2.24	III	17600	(78500)				2.24	III	17000	(75500)	25	**4E180**	35	(#)
			2.43	III	17600	(78500)				2.43	III	17000	(75500)	25	**4E185**	35	(#)
			2.49	III	17600	(78500)				2.74	III	17000	(75500)	25	**4E190**	35	(-),(#)
			2.49	III	17600	(78500)				2.97	III	17000	(75500)	25	**4E195**	35	(-),(#)
			2.43	III	30700	(136000)				2.43	III	29700	(132000)	25	**4F185**	35	(#)
			2.74	III	30700	(136000)				2.74	III	29700	(132000)	25	**4F190**	35	(#)
			2.97	III	30700	(136000)				2.97	III	29700	(132000)	25	**4F195**	35	(#)
37.7	38300	(4330)	1.06	I	7580	(33700)	45.5	31700	(3580)	1.06	I	7590	(33800)	25	**4C160**	39	
			1.16	I	7580	(33700)				1.19	I	7590	(33800)	25	**4C165**	39	
			1.30	I	13100	(58300)				1.30	I	12700	(56700)	25	**4D165**	39	
			1.49	II	13100	(58300)				1.49	II	12700	(56700)	25	**4D170**	39	
			1.63	II	13100	(58300)				1.63	II	12700	(56700)	25	**4D175**	39	
			1.98	II	13100	(58300)				2.24	III	12700	(56700)	25	**4D180**	39	
			2.24	III	18000	(79900)				2.24	III	17300	(77000)	25	**4E180**	39	
			2.27	III	18000	(79900)				2.43	III	17300	(77000)	25	**4E185**	39	
			2.27	III	18000	(79900)				2.74	III	17300	(77000)	25	**4E190**	39	(-)
			2.27	III	18000	(79900)				2.74	III	17300	(77000)	25	**4E195**	39	(-)
			2.24	III	30500	(136000)				2.24	III	30400	(135000)	25	**4F180**	39	
			2.43	III	30500	(136000)				2.43	III	30400	(135000)	25	**4F185**	39	
			2.74	III	30500	(136000)				2.74	III	30400	(135000)	25	**4F190**	39	(-)
			2.97	III	30500	(136000)				2.97	III	30400	(135000)	25	**4F195**	39	(-)

Notes: [1] For Y4 Double Reductions (4XXXDX) refer to the above table; for Y4 single reduction refer to tables on pages 2.91-2.130..

[2] Variable Frequency Drive (VFD) notes (see page 2.8 for Constant Torque Speed Ranges):
All 1HP+ motors require EP suffix in model number and can be used with a VFD, unless noted.
(-) = For Inverter Operation, starting condition may require ambient temperature of 5° C or higher.
(#) = Mounting positions Y2, F2, G2, K2, V2, W2 operation is limited to 75 %ED (duty cycle) for a 10 minute total cycle (7.5 minutes max. on time).

Standard Mounting Selection Tables

25 HP (18.5 kW)

Standard Mounting Positions:

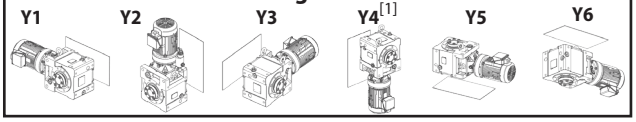

Dimension Pages:

Single Reduction	2.132-2.143
Single Reduction,Y2	2.144
Double Reduction	2.146-2.161
Double Reduction, Y2	2.162

Frequency	50 Hz	60 Hz
Input Speed	1450 RPM	1750 RPM
Number of Poles	4	

50Hz							60 Hz							Selection			
Output Speed (RPM)	Output Torque		Service Factor		Solid Shaft Overhung Load		Output Speed (RPM)	Output Torque		Service Factor		Solid Shaft Overhung Load		Base			VFD[2]
	in•lbs	(N•m)	SF	AGMA Class	lbs	(N)		in•lbs	(N•m)	SF	AGMA Class	lbs	(N)	Motor Power Code	Frame Size	Ratio	
31.9	45200	(5110)	0.98	-	7500	(33400)	38.5	37500	(4240)	1.01	I	7590	(33800)	25	**4C160**	46	
			1.22	I	13400	(59500)				1.22	I	13100	(58100)	25	**4D165**	46	
			1.48	II	13400	(59500)				1.48	II	13100	(58100)	25	**4D170**	46	
			1.63	II	13400	(59500)				1.63	II	13100	(58100)	25	**4D175**	46	
			1.71	II	13400	(59500)				2.01	III	13100	(58100)	25	**4D180**	46	
			1.92	II	18500	(82400)				2.24	III	17900	(79600)	25	**4E180**	46	
			1.92	II	18500	(82400)				2.32	III	17900	(79600)	25	**4E185**	46	
			1.92	II	18500	(82400)				2.32	III	17900	(79600)	25	**4E190**	46	(-)
			1.92	II	18500	(82400)				2.32	III	17900	(79600)	25	**4E195**	46	(-)
			2.24	III	30200	(134000)				2.24	III	30500	(136000)	25	**4F180**	46	
			2.43	III	30200	(134000)				2.43	III	30500	(136000)	25	**4F185**	46	
			2.74	III	30200	(134000)				2.74	III	30500	(136000)	25	**4F190**	46	(-)
			2.97	III	30200	(134000)				2.97	III	30500	(136000)	25	**4F195**	46	(-)
27.6	52200	(5900)	0.85	-	5880	(26100)	33.3	43300	(4890)	0.87	-	7530	(33500)	25	**4C160**	53	
			1.01	I	13600	(60300)				1.01	I	13300	(59200)	25	**4D160**	53	
			1.21	I	13600	(60300)				1.22	I	13300	(59200)	25	**4D165**	53	
			1.38	I	13600	(60300)				1.38	I	13300	(59200)	25	**4D170**	53	
			1.48	II	13600	(60300)				1.48	II	13300	(59200)	25	**4D175**	53	
			1.48	II	13600	(60300)				1.75	II	13300	(59200)	25	**4D180**	53	
			1.63	II	19000	(84400)				1.63	II	18400	(81700)	25	**4E175**	53	
			1.67	II	19000	(84400)				1.75	II	18400	(81700)	25	**4E180**	53	
			1.67	II	19000	(84400)				2.01	III	18400	(81700)	25	**4E185**	53	
			1.67	II	19000	(84400)				2.01	III	18400	(81700)	25	**4E190**	53	(-)
			1.67	II	19000	(84400)				2.01	III	18400	(81700)	25	**4E195**	53	(-)
			1.75	II	29900	(133000)				1.75	II	30300	(135000)	25	**4F180**	53	
			2.11	III	29900	(133000)				2.11	III	30300	(135000)	25	**4F185**	53	
			2.74	III	29900	(133000)				2.74	III	30300	(135000)	25	**4F190**	53	(-)
			2.97	III	29900	(133000)				2.97	III	30300	(135000)	25	**4F195**	53	(-)

Sold & Serviced By:
ELECTROMATE
Toll Free Phone (877) SERVO98
www.electromate.com
sales@electromate.com

Notes: [1] For Y4 Double Reductions (4XXXDX) refer to the above table; for Y4 single reduction refer to tables on pages 2.91-2.130.
[2] Variable Frequency Drive (VFD) notes (see page 2.8 for Constant Torque Speed Ranges):
All 1HP+ motors require EP suffix in model number and can be used with a VFD, unless noted.
(-) = For Inverter Operation, starting condition may require ambient temperature of 5° C or higher.

Standard Mounting Selection Tables

25 HP (18.5 kW)

Standard Mounting Positions:

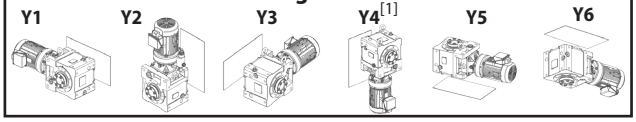

Dimension Pages:

Single Reduction	2.132-2.143
Single Reduction,Y2	2.144
Double Reduction	2.146-2.161
Double Reduction, Y2	2.162

Frequency	50 Hz	60 Hz
Input Speed	1450 RPM	1750 RPM
Number of Poles	4	

50Hz							60 Hz							Selection			
Output Speed (RPM)	Output Torque		Service Factor		Solid Shaft Overhung Load		Output Speed (RPM)	Output Torque		Service Factor		Solid Shaft Overhung Load		Base			VFD[2]
	in•lbs	(N•m)	SF	AGMA Class	lbs	(N)		in•lbs	(N•m)	SF	AGMA Class	lbs	(N)	Motor Power Code	Frame Size	Ratio	
24.4	59200	(6680)	1.02	I	13700	(60800)	29.4	49000	(5540)	1.02	I	13500	(60000)	25	**4D165**	60	
			1.06	I	13700	(60800)				1.06	I	13500	(60000)	25	**4D170**	60	
			1.30	I	13700	(60800)				1.30	I	13500	(60000)	25	**4D175**	60	
			1.30	I	13700	(60800)				1.57	II	13500	(60000)	25	**4D180**	60	
			1.47	II	19300	(86000)				1.65	II	18800	(83500)	25	**4E180**	60	
			1.47	II	19300	(86000)				1.77	II	18800	(83500)	25	**4E185**	60	
			1.47	II	19300	(86000)				1.77	II	18800	(83500)	25	**4E190**	60	(-)
			1.47	II	19300	(86000)				1.77	II	18800	(83500)	25	**4E195**	60	(-)
			1.65	II	29600	(132000)				1.65	II	30000	(134000)	25	**4F180**	60	
			2.06	III	29600	(132000)				2.11	III	30000	(134000)	25	**4F185**	60	
			2.69	III	29600	(132000)				2.74	III	30000	(134000)	25	**4F190**	60	(-)
			2.69	III	29600	(132000)				2.97	III	30000	(134000)	25	**4F195**	60	(-)
21.6	66800	(7550)	1.00	I	13700	(61100)	26.0	55400	(6260)	1.05	I	13600	(60600)	25	**4D170**	67	
			1.16	I	13700	(61100)				1.16	I	13600	(60600)	25	**4D175**	67	
			1.16	I	13700	(61100)				1.39	I	13600	(60600)	25	**4D180**	67	
			1.27	I	19600	(87400)				1.30	I	19100	(85100)	25	**4E175**	67	
			1.30	I	19600	(87400)				1.57	II	19100	(85100)	25	**4E180**	67	
			1.30	I	19600	(87400)				1.57	II	19100	(85100)	25	**4E185**	67	
			1.30	I	19600	(87400)				1.57	II	19100	(85100)	25	**4E190**	67	(-)
			1.30	I	19600	(87400)				1.57	II	19100	(85100)	25	**4E195**	67	(-)
			1.62	II	29300	(130000)				1.62	II	29800	(132000)	25	**4F180**	67	
			2.06	III	29300	(130000)				2.11	III	29800	(132000)	25	**4F185**	67	
			2.22	III	29300	(130000)				2.22	III	29800	(132000)	25	**4F190**	67	(-)
			2.38	III	29300	(130000)				2.60	III	29800	(132000)	25	**4F195**	67	(-)
19.7	73100	(8260)	0.86	-	12900	(57400)	23.8	60600	(6840)	0.87	-	13700	(60900)	25	**4D165**	74	
			1.00	I	12900	(57400)				1.05	I	13700	(60900)	25	**4D170**	74	
			1.06	I	12900	(57400)				1.06	I	13700	(60900)	25	**4D175**	74	
			1.06	I	12900	(57400)				1.27	I	13700	(60900)	25	**4D180**	74	
			1.19	I	19900	(88300)				1.19	I	19400	(86200)	25	**4E175**	74	
			1.19	I	19900	(88300)				1.44	II	19400	(86200)	25	**4E180**	74	
			1.19	I	19900	(88300)				1.44	II	19400	(86200)	25	**4E185**	74	
			1.19	I	19900	(88300)				1.44	II	19400	(86200)	25	**4E190**	74	
			1.19	I	19900	(88300)				1.44	II	19400	(86200)	25	**4E195**	74	
			1.62	II	29000	(129000)				1.62	II	29600	(131000)	25	**4F180**	74	
			2.06	III	29000	(129000)				2.11	III	29600	(131000)	25	**4F185**	74	
			2.18	III	29000	(129000)				2.22	III	29600	(131000)	25	**4F190**	74	
			2.18	III	29000	(129000)				2.60	III	29600	(131000)	25	**4F195**	74	

Notes: [1] For Y4 Double Reductions (4XXXDX) refer to the above table; for Y4 single reduction refer to tables on pages 2.91-2.130..

[2] Variable Frequency Drive (VFD) notes (see page 2.8 for Constant Torque Speed Ranges):
All 1HP+ motors require EP suffix in model number and can be used with a VFD, unless noted.
(-) = For Inverter Operation, starting condition may require ambient temperature of 5° C or higher.

Standard Mounting Selection Tables

25 HP (18.5 kW)

Standard Mounting Positions:

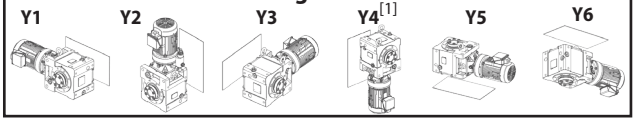

Dimension Pages:

Single Reduction	2.132-2.143
Single Reduction,Y2	2.144
Double Reduction	2.146-2.161
Double Reduction, Y2	2.162

Frequency	50 Hz	60 Hz
Input Speed	1450 RPM	1750 RPM
Number of Poles	4	

50Hz							60 Hz							Selection			
Output Speed (RPM)	Output Torque		Service Factor		Solid Shaft Overhung Load		Output Speed (RPM)	Output Torque		Service Factor		Solid Shaft Overhung Load		Base			VFD[2]
	in•lbs	*(N•m)*	SF	AGMA Class	lbs	*(N)*		in•lbs	*(N•m)*	SF	AGMA Class	lbs	*(N)*	Motor Power Code	Frame Size	Ratio	
18.1	79500	*(8990)*	0.97	-	10400	*(46100)*	21.9	65900	*(7450)*	0.97	-	13700	*(61100)*	25	**4D175**	80	
			0.97	-	10400	*(46100)*				1.17	I	13700	*(61100)*	25	**4D180**	80	
			1.05	I	19800	*(88000)*				1.05	I	19600	*(87200)*	25	**4E175**	80	
			1.09	I	19800	*(88000)*				1.30	I	19600	*(87200)*	25	**4E180**	80	
			1.09	I	19800	*(88000)*				1.32	I	19600	*(87200)*	25	**4E185**	80	
			1.09	I	19800	*(88000)*				1.32	I	19600	*(87200)*	25	**4E190**	80	
			1.09	I	19800	*(88000)*				1.32	I	19600	*(87200)*	25	**4E195**	80	
			1.30	I	28700	*(128000)*				1.30	I	29300	*(130000)*	25	**4F180**	80	
			1.63	II	28700	*(128000)*				1.63	II	29300	*(130000)*	25	**4F185**	80	
			1.90	II	28700	*(128000)*				1.90	II	29300	*(130000)*	25	**4F190**	80	
			2.00	III	28700	*(128000)*				2.19	III	29300	*(130000)*	25	**4F195**	80	
16.6	87000	*(9830)*	0.89	-	5680	*(25300)*	20.0	72100	*(8140)*	1.07	I	13200	*(58900)*	25	**4D180**	88	
			1.00	I	19400	*(86300)*				1.00	I	19800	*(88200)*	25	**4E175**	88	
			1.00	I	19400	*(86300)*				1.21	I	19800	*(88200)*	25	**4E180**	88	
			1.00	I	19400	*(86300)*				1.21	I	19800	*(88200)*	25	**4E185**	88	
			1.00	I	19400	*(86300)*				1.21	I	19800	*(88200)*	25	**4E190**	88	
			1.00	I	19400	*(86300)*				1.21	I	19800	*(88200)*	25	**4E195**	88	
			1.30	I	28400	*(126000)*				1.30	I	29100	*(129000)*	25	**4F180**	88	
			1.63	II	28400	*(126000)*				1.63	II	29100	*(129000)*	25	**4F185**	88	
			1.83	II	28400	*(126000)*				1.90	II	29100	*(129000)*	25	**4F190**	88	
			1.83	II	28400	*(126000)*				2.19	III	29100	*(129000)*	25	**4F195**	88	
14.3	101000	*(11400)*	0.86	-	18700	*(83100)*	17.2	83600	*(9450)*	0.86	-	19600	*(87000)*	25	**4E175**	102	
			0.86	-	18700	*(83100)*				1.04	I	19600	*(87000)*	25	**4E180**	102	
			0.86	-	18700	*(83100)*				1.04	I	19600	*(87000)*	25	**4E185**	102	
			0.86	-	18700	*(83100)*				1.04	I	19600	*(87000)*	25	**4E190**	102	
			0.86	-	18700	*(83100)*				1.04	I	19600	*(87000)*	25	**4E195**	102	
			1.05	I	27800	*(124000)*				1.05	I	28600	*(127000)*	25	**4F180**	102	
			1.30	I	27800	*(124000)*				1.30	I	28600	*(127000)*	25	**4F185**	102	
			1.58	II	27800	*(124000)*				1.66	II	28600	*(127000)*	25	**4F190**	102	
			1.58	II	27800	*(124000)*				1.91	II	28600	*(127000)*	25	**4F195**	102	
12.9	111000	*(12600)*	0.92	-	16100	*(71500)*	15.6	92300	*(10400)*	1.02	I	19100	*(85100)*	25	**4E180**	112	
			0.92	-	16100	*(71500)*				1.11	I	19100	*(85100)*	25	**4E185**	112	
			1.00	I	27400	*(122000)*				1.02	I	28200	*(125000)*	25	**4F180**	112	
			1.22	I	27400	*(122000)*				1.22	I	28200	*(125000)*	25	**4F185**	112	
			1.31	I	27400	*(122000)*				1.31	I	28200	*(125000)*	25	**4F190**	112	
			1.43	II	27400	*(122000)*				1.63	II	28200	*(125000)*	25	**4F195**	112	

Notes: [1] For Y4 Double Reductions (4XXXDX) refer to the above table; for Y4 single reduction refer to tables on pages 2.91-2.130.
[2] Variable Frequency Drive (VFD) notes (see page 2.8 for Constant Torque Speed Ranges):
All 1HP+ motors require EP suffix in model number and can be used with a VFD, unless noted.

Standard Mounting Selection Tables

25 HP (18.5 kW)

Standard Mounting Positions:

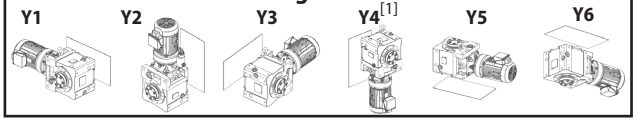

Dimension Pages:

Single Reduction	2.132-2.143
Single Reduction,Y2	2.144
Double Reduction	2.146-2.161
Double Reduction, Y2	2.162

Frequency	50 Hz	60 Hz
Input Speed	1450 RPM	1750 RPM
Number of Poles	4	

50Hz						60 Hz						Selection			
Output Speed (RPM)	Output Torque		Service Factor		Solid Shaft Overhung Load		Output Speed (RPM)	Output Torque		Service Factor		Solid Shaft Overhung Load		Base			VFD[2]
	in•lbs	(N•m)	SF	AGMA Class	lbs	(N)		in•lbs	(N•m)	SF	AGMA Class	lbs	(N)	Motor Power Code	Frame Size	Ratio	
11.8	122000	(13800)	0.84	-	12300	(54900)	14.3	101000	(11400)	1.02	I	18700	(83100)	25	**4E180**	123	
			0.84	-	12300	(54900)				1.02	I	18700	(83100)	25	**4E185**	123	
			1.00	I	26900	(120000)				1.02	I	27800	(124000)	25	**4F180**	123	
			1.22	I	26900	(120000)				1.22	I	27800	(124000)	25	**4F185**	123	
			1.31	I	26900	(120000)				1.31	I	27800	(124000)	25	**4F190**	123	
			1.31	I	26900	(120000)				1.58	II	27800	(124000)	25	**4F195**	123	
9.63	150000	(16900)	0.81	-	25700	(114000)	11.6	124000	(14000)	0.82	-	26800	(119000)	25	**4F180**	151	
			1.00	I	25700	(114000)				1.02	I	26800	(119000)	25	**4F185**	151	
			1.06	I	25700	(114000)				1.13	I	26800	(119000)	25	**4F190**	151	
			1.06	I	25700	(114000)				1.28	I	26800	(119000)	25	**4F195**	151	
8.12	177000	(20100)	0.82	-	24500	(109000)	9.80	147000	(16600)	0.82	-	25800	(115000)	25	**4F185**	179	
			0.90	-	24500	(109000)				0.98	-	25800	(115000)	25	**4F190**	179	
			0.90	-	24500	(109000)				1.08	I	25800	(115000)	25	**4F195**	179	

Sold & Serviced By:
ELECTROMATE
Toll Free Phone (877) SERVO98
www.electromate.com
sales@electromate.com

Notes: [1] For Y4 Double Reductions (4XXXDX) refer to the above table; for Y4 single reduction refer to tables on pages 2.91-2.130..
[2] Variable Frequency Drive (VFD) notes (see page 2.8 for Constant Torque Speed Ranges):
All 1HP+ motors require EP suffix in model number and can be used with a VFD, unless noted.

Standard Mounting Selection Tables

30 HP (22 kW)

Standard Mounting Positions:

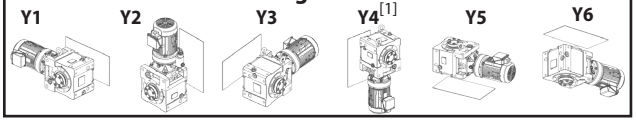

Dimension Pages:

Single Reduction	2.132-2.143
Single Reduction,Y2	2.144
Double Reduction	2.146-2.161
Double Reduction, Y2	2.162

Frequency	50 Hz	60 Hz
Input Speed	1450 RPM	1750 RPM
Number of Poles	4	

50Hz							60 Hz						Selection			
Output Speed (RPM)	Output Torque		Service Factor		Solid Shaft Overhung Load		Output Speed (RPM)	Output Torque		Service Factor		Solid Shaft Overhung Load		Base			VFD[2]
	in•lbs	(N•m)	SF	AGMA Class	lbs	(N)		in•lbs	(N•m)	SF	AGMA Class	lbs	(N)	Motor Power Code	Frame Size	Ratio	
138	12400	(1400)	1.15	I	4190	(18700)	167	10300	(1160)	1.15	I	4130	(18300)	30	**4B160**	11	
			1.32	I	4190	(18700)				1.32	I	4130	(18300)	30	**4B165**	11	
			1.36	I	6450	(28700)				1.36	I	6240	(27800)	30	**4C165**	11	
			1.89	II	6450	(28700)				1.89	II	6240	(27800)	30	**4C170**	11	(#)
			2.05	III	6450	(28700)				2.05	III	6240	(27800)	30	**4C175**	11	(#)
			1.89	II	10000	(44600)				1.89	II	9610	(42700)	30	**4D170**	11	(#)
			2.05	III	10000	(44600)				2.05	III	9610	(42700)	30	**4D175**	11	(#)
			2.43	III	9960	(44300)				2.43	III	9530	(42400)	30	**4D180**	11	(-),(#)
			2.73	III	9960	(44300)				2.73	III	9530	(42400)	30	**4D185**	11	(-),(#)
113	15100	(1710)	1.15	I	4230	(18800)	137	12500	(1420)	1.15	I	4190	(18600)	30	**4B160**	13	
			1.32	I	4230	(18800)				1.32	I	4190	(18600)	30	**4B165**	13	
			1.36	I	6620	(29400)				1.36	I	6420	(28600)	30	**4C165**	13	
			1.89	II	6640	(29500)				1.89	II	6450	(28700)	30	**4C170**	13	(#)
			2.05	III	6640	(29500)				2.05	III	6450	(28700)	30	**4C175**	13	(#)
			1.89	II	10500	(46500)				1.89	II	10000	(44600)	30	**4D170**	13	(#)
			2.05	III	10500	(46500)				2.05	III	10000	(44600)	30	**4D175**	13	(#)
			2.43	III	10500	(46500)				2.43	III	10000	(44600)	30	**4D180**	13	(-),(#)
			2.73	III	10500	(46500)				2.73	III	10000	(44600)	30	**4D185**	13	(-),(#)
104	16600	(1870)	1.15	I	4240	(18800)	125	13700	(1550)	1.15	I	4210	(18700)	30	**4B160**	14	
			1.27	I	4240	(18800)				1.32	I	4210	(18700)	30	**4B165**	14	
			1.36	I	6710	(29800)				1.36	I	6520	(29000)	30	**4C165**	14	
			1.89	II	6730	(29900)				1.89	II	6550	(29100)	30	**4C170**	14	(#)
			2.05	III	6730	(29900)				2.05	III	6550	(29100)	30	**4C175**	14	(#)
			1.89	II	10700	(47400)				1.89	II	10200	(45500)	30	**4D170**	14	(#)
			2.05	III	10700	(47400)				2.05	III	10200	(45500)	30	**4D175**	14	(#)
			2.43	III	10700	(47400)				2.43	III	10200	(45500)	30	**4D180**	14	(-),(#)
			2.73	III	10700	(47400)				2.73	III	10200	(45500)	30	**4D185**	14	(-),(#)
90.6	18900	(2140)	1.14	I	4220	(18800)	109	15700	(1770)	1.15	I	4230	(18800)	30	**4B160**	16	
			1.14	I	4220	(18800)				1.20	I	4230	(18800)	30	**4B165**	16	
			1.15	I	6830	(30400)				1.15	I	6670	(29700)	30	**4C160**	16	
			1.36	I	6830	(30400)				1.36	I	6670	(29700)	30	**4C165**	16	
			1.89	II	6830	(30400)				1.89	II	6660	(29600)	30	**4C170**	16	(#)
			2.01	III	6830	(30400)				2.05	III	6660	(29600)	30	**4C175**	16	(#)
			1.89	II	10900	(48600)				1.89	II	10500	(46800)	30	**4D170**	16	(#)
			2.05	III	10900	(48600)				2.05	III	10500	(46800)	30	**4D175**	16	(#)
			2.43	III	10900	(48300)				2.43	III	10400	(46400)	30	**4D180**	16	(-),(#)
			2.73	III	10900	(48300)				2.73	III	10400	(46400)	30	**4D185**	16	(-),(#)

Notes: [1] For Y4 Double Reductions (4XXXDX) refer to the above table; for Y4 single reduction refer to tables on pages 2.91-2.130.

[2] Variable Frequency Drive (VFD) notes (see page 2.8 for Constant Torque Speed Ranges):
All 1HP+ motors require EP suffix in model number and can be used with a VFD, unless noted.
(-) = For Inverter Operation, starting condition may require ambient temperature of 5° C or higher.
(#) = Mounting positions Y2, F2, G2, K2, V2, W2 operation is limited to 75 %ED (duty cycle) for a 10 minute total cycle (7.5 minutes max. on time).

Standard Mounting Selection Tables

30 HP (22 kW)

Standard Mounting Positions:

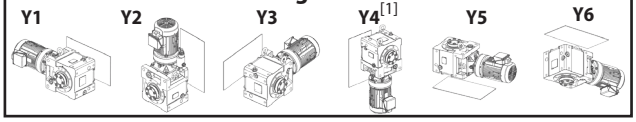

Dimension Pages:

Single Reduction	2.132-2.143
Single Reduction,Y2	2.144
Double Reduction	2.146-2.161
Double Reduction, Y2	2.162

Frequency	50 Hz	60 Hz
Input Speed	1450 RPM	1750 RPM
Number of Poles	4	

50Hz							60 Hz							Selection			
Output Speed (RPM)	Output Torque		Service Factor		Solid Shaft Overhung Load		Output Speed (RPM)	Output Torque		Service Factor		Solid Shaft Overhung Load		Base			VFD[2]
	in•lbs	(N•m)	SF	AGMA Class	lbs	(N)		in•lbs	(N•m)	SF	AGMA Class	lbs	(N)	Motor Power Code	Frame Size	Ratio	
82.9	20700	(2340)	1.07	I	4200	(18700)	100.0	17100	(1940)	1.10	I	4230	(18800)	30	**4B160**	18	
			1.15	I	6900	(30700)				1.15	I	6750	(30000)	30	**4C160**	18	
			1.36	I	6900	(30700)				1.36	I	6750	(30000)	30	**4C165**	18	
			1.88	II	6890	(30700)				1.89	II	6750	(30000)	30	**4C170**	18	(#)
			1.88	II	6890	(30700)				2.05	III	6750	(30000)	30	**4C175**	18	(#)
			1.89	II	11100	(49500)				1.89	II	10700	(47700)	30	**4D170**	18	(#)
			2.05	III	11100	(49500)				2.05	III	10700	(47700)	30	**4D175**	18	(#)
			2.43	III	11100	(49200)				2.43	III	10600	(47300)	30	**4D180**	18	(-),(#)
			2.73	III	11100	(49200)				2.73	III	10600	(47300)	30	**4D185**	18	(-),(#)
			2.73	III	14800	(65800)				2.73	III	14200	(63000)	30	**4E185**	18	(-),(#)
69.0	24800	(2810)	1.15	I	6990	(31100)	83.3	20600	(2320)	1.15	I	6880	(30600)	30	**4C160**	21	
			1.36	I	6990	(31100)				1.36	I	6880	(30600)	30	**4C165**	21	
			1.54	II	6990	(31100)				1.54	II	6880	(30600)	30	**4C170**	21	
			1.64	II	6990	(31100)				1.64	II	6880	(30600)	30	**4C175**	21	
			1.68	II	11500	(51100)				1.68	II	11100	(49300)	30	**4D175**	21	
			1.89	II	11500	(51100)				1.89	II	11100	(49300)	30	**4D180**	21	(-),(#)
			2.05	III	11500	(51100)				2.05	III	11100	(49300)	30	**4D185**	21	(-),(#)
			2.30	III	15500	(68900)				2.30	III	14900	(66100)	30	**4E190**	21	(-),(#)
			2.50	III	15500	(68900)				2.50	III	14900	(66100)	30	**4E195**	21	(-),(#)
64.7	26500	(2990)	0.92	-	7020	(31200)	78.1	21900	(2480)	0.92	-	6920	(30800)	30	**4C160**	22	
			1.10	I	7020	(31200)				1.10	I	6920	(30800)	30	**4C165**	22	
			1.54	II	7020	(31200)				1.54	II	6920	(30800)	30	**4C170**	22	
			1.59	II	7020	(31200)				1.64	II	6920	(30800)	30	**4C175**	22	
			1.68	II	11600	(51700)				1.68	II	11200	(50000)	30	**4D175**	22	
			1.89	II	11600	(51700)				1.89	II	11200	(50000)	30	**4D180**	22	(-),(#)
			2.05	III	11600	(51700)				2.05	III	11200	(50000)	30	**4D185**	22	(-),(#)
			2.30	III	15700	(69900)				2.30	III	15100	(67000)	30	**4E190**	22	(-),(#)
			2.50	III	15700	(69900)				2.50	III	15100	(67000)	30	**4E195**	22	(-),(#)
59.2	29000	(3270)	1.10	I	7040	(31300)	71.4	24000	(2710)	1.10	I	6980	(31000)	30	**4C165**	25	
			1.47	II	7040	(31300)				1.57	II	6980	(31000)	30	**4C175**	25	
			1.68	II	11800	(52500)				1.68	II	11400	(50800)	30	**4D175**	25	
			1.89	II	11800	(52500)				1.89	II	11400	(50800)	30	**4D180**	25	(-),(#)
			2.05	III	11800	(52500)				2.05	III	11400	(50800)	30	**4D185**	25	(-),(#)
			2.05	III	16000	(71200)				2.05	III	15400	(68400)	30	**4E185**	25	(-),(#)
			2.30	III	16000	(71200)				2.30	III	15400	(68400)	30	**4E190**	25	(-),(#)
			2.50	III	16000	(71200)				2.50	III	15400	(68400)	30	**4E195**	25	(-),(#)

Notes: [1] For Y4 Double Reductions (4XXXDX) refer to the above table; for Y4 single reduction refer to tables on pages 2.91-2.130..

[2] Variable Frequency Drive (VFD) notes (see page 2.8 for Constant Torque Speed Ranges):
All 1HP+ motors require EP suffix in model number and can be used with a VFD, unless noted.
(-) = For Inverter Operation, starting condition may require ambient temperature of 5° C or higher.
(#) = Mounting positions Y2, F2, G2, K2, V2, W2 operation is limited to 75 %ED (duty cycle) for a 10 minute total cycle (7.5 minutes max. on time).

Standard Mounting Selection Tables

30 HP (22 kW)

Standard Mounting Positions:

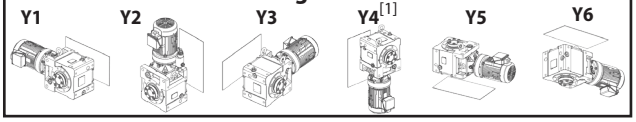

Dimension Pages:

Single Reduction	2.132-2.143
Single Reduction,Y2	2.144
Double Reduction	2.146-2.161
Double Reduction, Y2	2.162

Frequency	50 Hz	60 Hz
Input Speed	1450 RPM	1750 RPM
Number of Poles	4	

50Hz							60 Hz							Selection			
Output Speed (RPM)	Output Torque		Service Factor		Solid Shaft Overhung Load		Output Speed (RPM)	Output Torque		Service Factor		Solid Shaft Overhung Load		Base			VFD[2]
	in•lbs	(N•m)	SF	AGMA Class	lbs	(N)		in•lbs	(N•m)	SF	AGMA Class	lbs	(N)	Motor Power Code	Frame Size	Ratio	
51.8	33100	(3740)	1.10	I	7050	(31400)	62.5	27400	(3100)	1.10	I	7030	(31300)	30	**4C165**	28	
			1.34	I	7050	(31400)				1.37	I	7030	(31300)	30	**4C170**	28	
			1.54	II	12000	(53600)				1.54	II	11700	(52000)	30	**4D170**	28	
			1.68	II	12000	(53600)				1.68	II	11700	(52000)	30	**4D175**	28	
			1.89	II	12000	(53600)				1.89	II	11700	(52000)	30	**4D180**	28	(-),(#)
			2.05	III	12000	(53600)				2.05	III	11700	(52000)	30	**4D185**	28	(-),(#)
			1.89	II	16400	(73200)				1.89	II	15800	(70400)	30	**4E180**	28	(-),(#)
			2.05	III	16400	(73200)				2.05	III	15800	(70400)	30	**4E185**	28	(-),(#)
			2.30	III	16400	(73200)				2.30	III	15800	(70400)	30	**4E190**	28	(-),(#)
			2.50	III	16400	(73200)				2.50	III	15800	(70400)	30	**4E195**	28	(-),(#)
			2.50	III	29000	(129000)				2.50	III	27700	(123000)	30	**4F195**	28	(-),(#)
41.2	41600	(4700)	1.09	I	6960	(31000)	49.7	34500	(3900)	1.09	I	7040	(31300)	30	**4C165**	35	
			1.25	I	12400	(55200)				1.25	I	12100	(53900)	30	**4D170**	35	
			1.37	I	12400	(55200)				1.37	I	12100	(53900)	30	**4D175**	35	
			1.81	II	12400	(55200)				1.89	II	12100	(53900)	30	**4D180**	35	(#)
			1.89	II	17200	(76300)				1.89	II	16600	(73700)	30	**4E180**	35	(#)
			2.05	III	17200	(76300)				2.05	III	16600	(73700)	30	**4E185**	35	(#)
			2.09	III	17200	(76300)				2.30	III	16600	(73700)	30	**4E190**	35	(-),(#)
			2.09	III	17200	(76300)				2.50	III	16600	(73700)	30	**4E195**	35	(-),(#)
			2.05	III	30400	(135000)				2.05	III	29300	(130000)	30	**4F185**	35	(#)
			2.30	III	30400	(135000)				2.30	III	29300	(130000)	30	**4F190**	35	(-),(#)
			2.50	III	30400	(135000)				2.50	III	29300	(130000)	30	**4F195**	35	(-),(#)
37.7	45500	(5140)	0.97	-	6900	(30700)	45.5	37700	(4260)	1.00	I	7020	(31200)	30	**4C165**	39	
			1.10	I	12500	(55700)				1.10	I	12300	(54500)	30	**4D165**	39	
			1.25	I	12500	(55700)				1.25	I	12300	(54500)	30	**4D170**	39	
			1.37	I	12500	(55700)				1.37	I	12300	(54500)	30	**4D175**	39	
			1.67	II	12500	(55700)				1.89	II	12300	(54500)	30	**4D180**	39	
			1.89	II	17400	(77500)				1.89	II	16900	(75000)	30	**4E180**	39	
			1.91	II	17400	(77500)				2.05	III	16900	(75000)	30	**4E185**	39	
			1.91	II	17400	(77500)				2.30	III	16900	(75000)	30	**4E190**	39	(-)
			1.91	II	17400	(77500)				2.31	III	16900	(75000)	30	**4E195**	39	(-)
			1.89	II	30200	(134000)				1.89	II	30000	(133000)	30	**4F180**	39	
			2.05	III	30200	(134000)				2.05	III	30000	(133000)	30	**4F185**	39	
			2.30	III	30200	(134000)				2.30	III	30000	(133000)	30	**4F190**	39	(-)
			2.50	III	30200	(134000)				2.50	III	30000	(133000)	30	**4F195**	39	(-)

Notes: [1] For Y4 Double Reductions (4XXXDX) refer to the above table; for Y4 single reduction refer to tables on pages 2.91-2.130.

[2] Variable Frequency Drive (VFD) notes (see page 2.8 for Constant Torque Speed Ranges):
All 1HP+ motors require EP suffix in model number and can be used with a VFD, unless noted.
(-) = For Inverter Operation, starting condition may require ambient temperature of 5° C or higher.
(#) = Mounting positions Y2, F2, G2, K2, V2, W2 operation is limited to 75 %ED (duty cycle) for a 10 minute total cycle (7.5 minutes max. on time).

Standard Mounting Selection Tables

30 HP (22 kW)

Standard Mounting Positions:

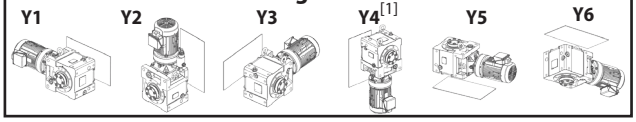

Dimension Pages:

Single Reduction	2.132-2.143
Single Reduction,Y2	2.144
Double Reduction	2.146-2.161
Double Reduction, Y2	2.162

Frequency	50 Hz	60 Hz
Input Speed	1450 RPM	1750 RPM
Number of Poles	4	

50Hz							60 Hz							Selection			
Output Speed (RPM)	Output Torque		Service Factor		Solid Shaft Overhung Load		Output Speed (RPM)	Output Torque		Service Factor		Solid Shaft Overhung Load		Base			VFD[2]
	in•lbs	(N•m)	SF	AGMA Class	lbs	(N)		in•lbs	(N•m)	SF	AGMA Class	lbs	(N)	Motor Power Code	Frame Size	Ratio	
31.9	53800	(6080)	0.82	-	4520	(20100)	38.5	44600	(5040)	0.85	-	6920	(30800)	30	**4C160**	46	
			0.82	-	4520	(20100)				0.85	-	6920	(30800)	30	**4C165**	46	
			1.24	I	12700	(56400)				1.24	I	12500	(55600)	30	**4D170**	46	
			1.37	I	12700	(56400)				1.37	I	12500	(55600)	30	**4D175**	46	
			1.43	II	12700	(56400)				1.69	II	12500	(55600)	30	**4D180**	46	
			1.62	II	17900	(79600)				1.89	II	17400	(77200)	30	**4E180**	46	
			1.62	II	17900	(79600)				1.95	II	17400	(77200)	30	**4E185**	46	
			1.62	II	17900	(79600)				1.95	II	17400	(77200)	30	**4E190**	46	(-)
			1.62	II	17900	(79600)				1.95	II	17400	(77200)	30	**4E195**	46	(-)
			1.89	II	29800	(133000)				1.89	II	30200	(135000)	30	**4F180**	46	
			2.05	III	29800	(133000)				2.05	III	30200	(135000)	30	**4F185**	46	
			2.30	III	29800	(133000)				2.30	III	30200	(135000)	30	**4F190**	46	(-)
			2.50	III	29800	(133000)				2.50	III	30200	(135000)	30	**4F195**	46	(-)
27.6	62100	(7010)	1.02	I	12800	(56800)	33.3	51400	(5810)	1.03	I	12600	(56200)	30	**4D165**	53	
			1.16	I	12800	(56800)				1.16	I	12600	(56200)	30	**4D170**	53	
			1.24	I	12800	(56800)				1.24	I	12600	(56200)	30	**4D175**	53	
			1.24	I	12800	(56800)				1.47	II	12600	(56200)	30	**4D180**	53	
			1.37	I	18200	(81100)				1.37	I	17800	(79000)	30	**4E175**	53	
			1.40	II	18200	(81100)				1.47	II	17800	(79000)	30	**4E180**	53	
			1.40	II	18200	(81100)				1.69	II	17800	(79000)	30	**4E185**	53	
			1.40	II	18200	(81100)				1.69	II	17800	(79000)	30	**4E190**	53	(-)
			1.40	II	18200	(81100)				1.69	II	17800	(79000)	30	**4E195**	53	(-)
			1.47	II	29500	(131000)				1.47	II	29900	(133000)	30	**4F180**	53	
			1.77	II	29500	(131000)				1.77	II	29900	(133000)	30	**4F185**	53	
			2.30	III	29500	(131000)				2.30	III	29900	(133000)	30	**4F190**	53	(-)
			2.50	III	29500	(131000)				2.50	III	29900	(133000)	30	**4F195**	53	(-)
24.4	70400	(7950)	0.85	-	12800	(56800)	29.4	58300	(6590)	0.85	-	12700	(56700)	30	**4D165**	60	
			1.10	I	12800	(56800)				1.10	I	12700	(56700)	30	**4D175**	60	
			1.10	I	12800	(56800)				1.32	I	12700	(56700)	30	**4D180**	60	
			1.24	I	18500	(82300)				1.39	I	18100	(80500)	30	**4E180**	60	
			1.24	I	18500	(82300)				1.49	II	18100	(80500)	30	**4E185**	60	
			1.24	I	18500	(82300)				1.49	II	18100	(80500)	30	**4E190**	60	(-)
			1.24	I	18500	(82300)				1.49	II	18100	(80500)	30	**4E195**	60	(-)
			1.39	I	29100	(130000)				1.39	I	29600	(132000)	30	**4F180**	60	
			1.74	II	29100	(130000)				1.77	II	29600	(132000)	30	**4F185**	60	
			2.26	III	29100	(130000)				2.30	III	29600	(132000)	30	**4F190**	60	(-)
			2.26	III	29100	(130000)				2.50	III	29600	(132000)	30	**4F195**	60	(-)

Notes: [1] For Y4 Double Reductions (4XXXDX) refer to the above table; for Y4 single reduction refer to tables on pages 2.91-2.130..

[2] Variable Frequency Drive (VFD) notes (see page 2.8 for Constant Torque Speed Ranges):
All 1HP+ motors require EP suffix in model number and can be used with a VFD, unless noted.
(-) = For Inverter Operation, starting condition may require ambient temperature of 5° C or higher.
(#) = Mounting positions Y2, F2, G2, K2, V2, W2 operation is limited to 75 %ED (duty cycle) for a 10 minute total cycle (7.5 minutes max. on time).

Standard Mounting Selection Tables

30 HP (22 kW)

Standard Mounting Positions:

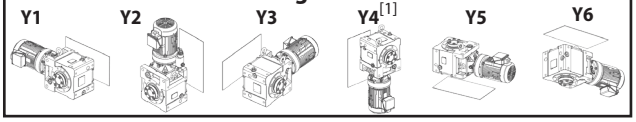

Dimension Pages:

Single Reduction	2.132-2.143
Single Reduction,Y2	2.144
Double Reduction	2.146-2.161
Double Reduction, Y2	2.162

Frequency	50 Hz	60 Hz
Input Speed	1450 RPM	1750 RPM
Number of Poles	4	

50Hz							60 Hz							Selection			
Output Speed (RPM)	Output Torque		Service Factor		Solid Shaft Overhung Load		Output Speed (RPM)	Output Torque		Service Factor		Solid Shaft Overhung Load		Base			VFD[2]
	in•lbs	*(N•m)*	SF	AGMA Class	lbs	*(N)*		in•lbs	*(N•m)*	SF	AGMA Class	lbs	*(N)*	Motor Power Code	Frame Size	Ratio	
21.6	79500	*(8980)*	0.97	-	10400	*(46200)*	26.0	65800	*(7440)*	0.97	-	12800	*(56800)*	30	**4D175**	67	
			0.97	-	10400	*(46200)*				1.17	I	12800	*(56800)*	30	**4D180**	67	
			1.07	I	18700	*(83200)*				1.09	I	18400	*(81700)*	30	**4E175**	67	
			1.09	I	18700	*(83200)*				1.32	I	18400	*(81700)*	30	**4E180**	67	
			1.09	I	18700	*(83200)*				1.32	I	18400	*(81700)*	30	**4E185**	67	
			1.09	I	18700	*(83200)*				1.32	I	18400	*(81700)*	30	**4E190**	67	
			1.09	I	18700	*(83200)*				1.32	I	18400	*(81700)*	30	**4E195**	67	
			1.36	I	28700	*(128000)*				1.36	I	29300	*(130000)*	30	**4F180**	67	
			1.73	II	28700	*(128000)*				1.77	II	29300	*(130000)*	30	**4F185**	67	
			1.86	II	28700	*(128000)*				1.86	II	29300	*(130000)*	30	**4F190**	67	
			2.00	III	28700	*(128000)*				2.19	III	29300	*(130000)*	30	**4F195**	67	
19.7	86900	*(9820)*	0.89	-	5760	*(25600)*	23.8	72000	*(8140)*	0.89	-	12800	*(56800)*	30	**4D175**	74	
			0.89	-	5760	*(25600)*				1.07	I	12800	*(56800)*	30	**4D180**	74	
			1.00	I	18800	*(83800)*				1.00	I	18500	*(82500)*	30	**4E175**	74	
			1.00	I	18800	*(83800)*				1.21	I	18500	*(82500)*	30	**4E180**	74	
			1.00	I	18800	*(83800)*				1.21	I	18500	*(82500)*	30	**4E185**	74	
			1.00	I	18800	*(83800)*				1.21	I	18500	*(82500)*	30	**4E190**	74	
			1.00	I	18800	*(83800)*				1.21	I	18500	*(82500)*	30	**4E195**	74	
			1.36	I	28400	*(126000)*				1.36	I	29100	*(129000)*	30	**4F180**	74	
			1.73	II	28400	*(126000)*				1.77	II	29100	*(129000)*	30	**4F185**	74	
			1.83	II	28400	*(126000)*				1.86	II	29100	*(129000)*	30	**4F190**	74	
			1.83	II	28400	*(126000)*				2.19	III	29100	*(129000)*	30	**4F195**	74	
18.1	94600	*(10700)*	0.82	-	-	-	21.9	78400	*(8860)*	0.98	-	10900	*(48400)*	30	**4D180**	80	
			0.89	-	18900	*(84200)*				0.89	-	18700	*(83100)*	30	**4E175**	80	
			0.92	-	18900	*(84200)*				1.10	I	18700	*(83100)*	30	**4E180**	80	
			0.92	-	18900	*(84200)*				1.11	I	18700	*(83100)*	30	**4E185**	80	
			0.92	-	18900	*(84200)*				1.11	I	18700	*(83100)*	30	**4E190**	80	
			0.92	-	18900	*(84200)*				1.11	I	18700	*(83100)*	30	**4E195**	80	
			1.10	I	28100	*(125000)*				1.10	I	28800	*(128000)*	30	**4F180**	80	
			1.37	I	28100	*(125000)*				1.37	I	28800	*(128000)*	30	**4F185**	80	
			1.60	II	28100	*(125000)*				1.60	II	28800	*(128000)*	30	**4F190**	80	
			1.68	II	28100	*(125000)*				1.84	II	28800	*(128000)*	30	**4F195**	80	

Notes: [1] For Y4 Double Reductions (4XXXDX) refer to the above table; for Y4 single reduction refer to tables on pages 2.91-2.130.
[2] Variable Frequency Drive (VFD) notes (see page 2.8 for Constant Torque Speed Ranges):
All 1HP+ motors require EP suffix in model number and can be used with a VFD, unless noted.

Standard Mounting Selection Tables

30 HP (22 kW)

Standard Mounting Positions:

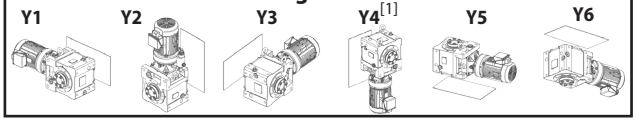

Dimension Pages:

Single Reduction	2.132-2.143
Single Reduction,Y2	2.144
Double Reduction	2.146-2.161
Double Reduction, Y2	2.162

Frequency	50 Hz	60 Hz
Input Speed	1450 RPM	1750 RPM
Number of Poles	4	

50Hz						60 Hz						Selection			
Output Speed (RPM)	Output Torque		Service Factor		Solid Shaft Overhung Load		Output Speed (RPM)	Output Torque		Service Factor		Solid Shaft Overhung Load		Base			VFD[2]
	in•lbs	(N•m)	SF	AGMA Class	lbs	(N)		in•lbs	(N•m)	SF	AGMA Class	lbs	(N)	Motor Power Code	Frame Size	Ratio	
16.6	103000	(11700)	0.84	-	18200	(81100)	20.0	85700	(9690)	0.84	-	18800	(83700)	30	**4E175**	88	
			0.84	-	18200	(81100)				1.01	I	18800	(83700)	30	**4E180**	88	
			0.84	-	18200	(81100)				1.01	I	18800	(83700)	30	**4E185**	88	
			0.84	-	18200	(81100)				1.01	I	18800	(83700)	30	**4E190**	88	
			0.84	-	18200	(81100)				1.01	I	18800	(83700)	30	**4E195**	88	
			1.10	I	27700	(123000)				1.10	I	28500	(127000)	30	**4F180**	88	
			1.37	I	27700	(123000)				1.37	I	28500	(127000)	30	**4F185**	88	
			1.54	II	27700	(123000)				1.60	II	28500	(127000)	30	**4F190**	88	
			1.54	II	27700	(123000)				1.84	II	28500	(127000)	30	**4F195**	88	
14.3	120000	(13600)	0.89	-	27000	(120000)	17.2	99400	(11200)	0.89	-	27900	(124000)	30	**4F180**	102	
			1.10	I	27000	(120000)				1.10	I	27900	(124000)	30	**4F185**	102	
			1.33	I	27000	(120000)				1.40	II	27900	(124000)	30	**4F190**	102	
			1.33	I	27000	(120000)				1.60	II	27900	(124000)	30	**4F195**	102	
12.9	132000	(15000)	0.84	-	26400	(118000)	15.6	110000	(12400)	0.85	-	27400	(122000)	30	**4F180**	112	
			1.03	I	26400	(118000)				1.03	I	27400	(122000)	30	**4F185**	112	
			1.10	I	26400	(118000)				1.10	I	27400	(122000)	30	**4F190**	112	
			1.20	I	26400	(118000)				1.37	I	27400	(122000)	30	**4F195**	112	
11.8	145000	(16400)	0.84	-	25900	(115000)	14.3	120000	(13600)	0.85	-	27000	(120000)	30	**4F180**	123	
			1.03	I	25900	(115000)				1.03	I	27000	(120000)	30	**4F185**	123	
			1.10	I	25900	(115000)				1.10	I	27000	(120000)	30	**4F190**	123	
			1.10	I	25900	(115000)				1.33	I	27000	(120000)	30	**4F195**	123	
9.63	178000	(20100)	0.84	-	24500	(109000)	11.6	147000	(16700)	0.85	-	25800	(115000)	30	**4F185**	151	
			0.90	-	24500	(109000)				0.95	-	25800	(115000)	30	**4F190**	151	
			0.90	-	24500	(109000)				1.08	I	25800	(115000)	30	**4F195**	151	

Sold & Serviced By:
ELECTROMATE
Toll Free Phone (877) SERVO98
www.electromate.com
sales@electromate.com

Notes: [1] For Y4 Double Reductions (4XXXDX) refer to the above table; for Y4 single reduction refer to tables on pages 2.91-2.130..
[2] Variable Frequency Drive (VFD) notes (see page 2.8 for Constant Torque Speed Ranges):
All 1HP+ motors require EP suffix in model number and can be used with a VFD, unless noted.

Standard Mounting Selection Tables

40 HP (30 kW)

Standard Mounting Positions:

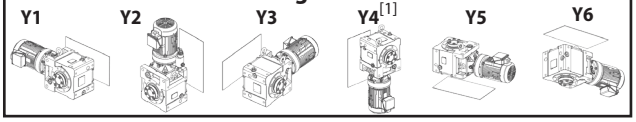

Dimension Pages:

Single Reduction	2.132-2.143
Single Reduction,Y2	2.144
Double Reduction	2.146-2.161
Double Reduction, Y2	2.162

Frequency	50 Hz	60 Hz
Input Speed	1450 RPM	1750 RPM
Number of Poles	4	

50Hz							60 Hz							Selection			
Output Speed (RPM)	Output Torque		Service Factor		Solid Shaft Overhung Load		Output Speed (RPM)	Output Torque		Service Factor		Solid Shaft Overhung Load		Base			VFD[2]
	in•lbs	(N•m)	SF	AGMA Class	lbs	(N)		in•lbs	(N•m)	SF	AGMA Class	lbs	(N)	Motor Power Code	Frame Size	Ratio	
138	16900	(1910)	1.38	I	6010	(26700)	167	14000	(1580)	1.38	I	5870	(26100)	40	**4C170**	11	(#)
			1.50	II	6010	(26700)				1.50	II	5870	(26100)	40	**4C175**	11	(#)
			1.38	I	9660	(43000)				1.38	I	9290	(41300)	40	**4D170**	11	(#)
			1.50	II	9660	(43000)				1.50	II	9290	(41300)	40	**4D175**	11	(#)
			1.78	II	9590	(42700)				1.78	II	9230	(41000)	40	**4D180**	11	(-),(#)
			2.00	III	9590	(42700)				2.00	III	9230	(41000)	40	**4D185**	11	(-),(#)
			2.28	III	12900	(57400)				2.28	III	12400	(54900)	40	**4E190**	11	(-),(#)
			2.50	III	12900	(57400)				2.50	III	12400	(54900)	40	**4E195**	11	(-),(#)
113	20600	(2330)	1.38	I	6110	(27200)	137	17100	(1930)	1.38	I	6010	(26700)	40	**4C170**	13	(#)
			1.50	II	6110	(27200)				1.50	II	6010	(26700)	40	**4C175**	13	(#)
			1.38	I	10000	(44500)				1.38	I	9660	(43000)	40	**4D170**	13	(#)
			1.50	II	10000	(44500)				1.50	II	9660	(43000)	40	**4D175**	13	(#)
			1.78	II	10000	(44500)				1.78	II	9660	(43000)	40	**4D180**	13	(-),(#)
			2.00	III	10000	(44500)				2.00	III	9660	(43000)	40	**4D185**	13	(-),(#)
			2.28	III	13500	(59900)				2.28	III	12900	(57400)	40	**4E190**	13	(-),(#)
			2.50	III	13500	(59900)				2.50	III	12900	(57400)	40	**4E195**	13	(-),(#)
104	22600	(2550)	1.38	I	6140	(27300)	125	18700	(2110)	1.38	I	6060	(27000)	40	**4C170**	14	(#)
			1.50	II	6140	(27300)				1.50	II	6060	(27000)	40	**4C175**	14	(#)
			1.38	I	10200	(45200)				1.38	I	9830	(43700)	40	**4D170**	14	(#)
			1.50	II	10200	(45200)				1.50	II	9830	(43700)	40	**4D175**	14	(#)
			1.78	II	10200	(45200)				1.78	II	9830	(43700)	40	**4D180**	14	(-),(#)
			2.00	III	10200	(45200)				2.00	III	9830	(43700)	40	**4D185**	14	(-),(#)
			2.28	III	13700	(61000)				2.28	III	13200	(58600)	40	**4E190**	14	(-),(#)
			2.50	III	13700	(61000)				2.50	III	13200	(58600)	40	**4E195**	14	(-),(#)
90.6	25800	(2910)	1.38	I	6170	(27400)	109	21400	(2420)	1.38	I	6120	(27200)	40	**4C170**	16	(#)
			1.47	II	6170	(27400)				1.50	II	6120	(27200)	40	**4C175**	16	(#)
			1.38	I	10400	(46100)				1.38	I	10000	(44700)	40	**4D170**	16	(#)
			1.50	II	10400	(46100)				1.50	II	10000	(44700)	40	**4D175**	16	(#)
			1.78	II	10300	(45900)				1.78	II	9990	(44400)	40	**4D180**	16	(-),(#)
			2.00	III	10300	(45900)				2.00	III	9990	(44400)	40	**4D185**	16	(-),(#)
			2.28	III	14000	(62100)				2.28	III	13400	(59700)	40	**4E190**	16	(-),(#)
			2.50	III	14000	(62100)				2.50	III	13400	(59700)	40	**4E195**	16	(-),(#)

Notes: [1] For Y4 Double Reductions (4XXXDX) refer to the above table; for Y4 single reduction refer to tables on pages 2.91-2.130.

[2] Variable Frequency Drive (VFD) notes (see page 2.8 for Constant Torque Speed Ranges):
All 1HP+ motors require EP suffix in model number and can be used with a VFD, unless noted.
(-) = For Inverter Operation, starting condition may require ambient temperature of 5° C or higher.
(#) = Mounting positions Y2, F2, G2, K2, V2, W2 operation is limited to 75 %ED (duty cycle) for a 10 minute total cycle (7.5 minutes max. on time).

Standard Mounting Selection Tables

40 HP (30 kW)

Standard Mounting Positions:

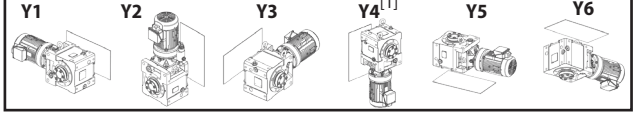

Dimension Pages:

Single Reduction	2.132-2.143
Single Reduction,Y2	2.144
Double Reduction	2.146-2.161
Double Reduction, Y2	2.162

Frequency	50 Hz	60 Hz
Input Speed	1450 RPM	1750 RPM
Number of Poles	4	

50Hz							60 Hz						Selection			
Output Speed (RPM)	Output Torque		Service Factor		Solid Shaft Overhung Load		Output Speed (RPM)	Output Torque		Service Factor		Solid Shaft Overhung Load		Base			VFD[2]
	in•lbs	(N•m)	SF	AGMA Class	lbs	(N)		in•lbs	(N•m)	SF	AGMA Class	lbs	(N)	Motor Power Code	Frame Size	Ratio	
82.9	28200	(3190)	1.38	I	6170	(27500)	100.0	23400	(2640)	1.38	I	6150	(27400)	40	**4C170**	18	(#)
			1.38	I	6170	(27500)				1.50	II	6150	(27400)	40	**4C175**	18	(#)
			1.38	I	10500	(46800)				1.38	I	10200	(45400)	40	**4D170**	18	(#)
			1.50	II	10500	(46800)				1.50	II	10200	(45400)	40	**4D175**	18	(#)
			1.78	II	10500	(46600)				1.78	II	10100	(45100)	40	**4D180**	18	(-),(#)
			2.00	III	10500	(46600)				2.00	III	10100	(45100)	40	**4D185**	18	(-),(#)
			2.00	III	14300	(63400)				2.00	III	13700	(61000)	40	**4E185**	18	(-),(#)
			2.28	III	14200	(63300)				2.28	III	13700	(60800)	40	**4E190**	18	(-),(#)
			2.50	III	14200	(63300)				2.50	III	13700	(60800)	40	**4E195**	18	(-),(#)
			2.50	III	25000	(111000)				2.50	III	23900	(106000)	40	**4F195**	18	(-),(#)
69.0	33900	(3830)	1.23	I	10800	(47900)	83.3	28100	(3170)	1.23	I	10500	(46700)	40	**4D175**	21	
			1.38	I	10800	(47900)				1.38	I	10500	(46700)	40	**4D180**	21	(-),(#)
			1.50	II	10800	(47900)				1.50	II	10500	(46700)	40	**4D185**	21	(-),(#)
			1.69	II	14800	(66000)				1.69	II	14300	(63600)	40	**4E190**	21	(-),(#)
			1.83	II	14800	(66000)				1.83	II	14300	(63600)	40	**4E195**	21	(-),(#)
64.7	36100	(4080)	1.13	I	6100	(27100)	78.1	29900	(3380)	1.13	I	6170	(27400)	40	**4C170**	22	
			1.17	I	6100	(27100)				1.20	I	6170	(27400)	40	**4C175**	22	
			1.23	I	10800	(48200)				1.23	I	10600	(47100)	40	**4D175**	22	
			1.38	I	10800	(48200)				1.38	I	10600	(47100)	40	**4D180**	22	(-),(#)
			1.50	II	10800	(48200)				1.50	II	10600	(47100)	40	**4D185**	22	(-),(#)
			1.69	II	15000	(66700)				1.69	II	14500	(64400)	40	**4E190**	22	(-),(#)
			1.83	II	15000	(66700)				1.83	II	14500	(64400)	40	**4E195**	22	(-),(#)
59.2	39500	(4460)	1.13	I	10900	(48700)	71.4	32700	(3700)	1.13	I	10700	(47700)	40	**4D170**	25	
			1.23	I	10900	(48700)				1.23	I	10700	(47700)	40	**4D175**	25	
			1.38	I	10900	(48700)				1.38	I	10700	(47700)	40	**4D180**	25	(-),(#)
			1.50	II	10900	(48700)				1.50	II	10700	(47700)	40	**4D185**	25	(-),(#)
			1.50	II	15200	(67800)				1.50	II	14700	(65600)	40	**4E185**	25	(-),(#)
			1.69	II	15200	(67800)				1.69	II	14700	(65600)	40	**4E190**	25	(-),(#)
			1.83	II	15200	(67800)				1.83	II	14700	(65600)	40	**4E195**	25	(-),(#)

Sold & Serviced By:
ELECTROMATE
Toll Free Phone (877) SERVO98
www.electromate.com
sales@electromate.com

Notes: [1] For Y4 Double Reductions (4XXXDX) refer to the above table; for Y4 single reduction refer to tables on pages 2.91-2.130..

[2] Variable Frequency Drive (VFD) notes (see page 2.8 for Constant Torque Speed Ranges):
All 1HP+ motors require EP suffix in model number and can be used with a VFD, unless noted.
(-) = For Inverter Operation, starting condition may require ambient temperature of 5° C or higher.
(#) = Mounting positions Y2, F2, G2, K2, V2, W2 operation is limited to 75 %ED (duty cycle) for a 10 minute total cycle (7.5 minutes max. on time).

Standard Mounting Selection Tables

40 HP (30 kW)

Standard Mounting Positions:

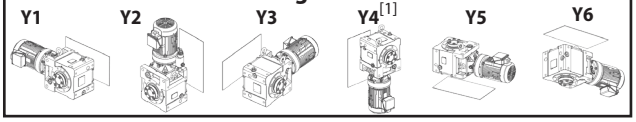

Dimension Pages:

Single Reduction	2.132-2.143
Single Reduction,Y2	2.144
Double Reduction	2.146-2.161
Double Reduction, Y2	2.162

Frequency	50 Hz	60 Hz
Input Speed	1450 RPM	1750 RPM
Number of Poles	4	

50Hz							60 Hz							Selection			
Output Speed (RPM)	Output Torque		Service Factor		Solid Shaft Overhung Load		Output Speed (RPM)	Output Torque		Service Factor		Solid Shaft Overhung Load		Base			VFD[2]
	in•lbs	(N•m)	SF	AGMA Class	lbs	(N)		in•lbs	(N•m)	SF	AGMA Class	lbs	(N)	Motor Power Code	Frame Size	Ratio	
51.8	45100	(5100)	0.98	-	5910	(26300)	62.5	37400	(4230)	1.01	I	6080	(27100)	40	**4C170**	28	
			1.13	I	11100	(49300)				1.13	I	10900	(48400)	40	**4D170**	28	
			1.23	I	11100	(49300)				1.23	I	10900	(48400)	40	**4D175**	28	
			1.38	I	11100	(49300)				1.38	I	10900	(48400)	40	**4D180**	28	(-),(#)
			1.50	II	11100	(49300)				1.50	II	10900	(48400)	40	**4D185**	28	(-),(#)
			1.38	I	15600	(69200)				1.38	I	15100	(67100)	40	**4E180**	28	(-),(#)
			1.50	II	15600	(69200)				1.50	II	15100	(67100)	40	**4E185**	28	(-),(#)
			1.69	II	15600	(69200)				1.69	II	15100	(67100)	40	**4E190**	28	(-),(#)
			1.83	II	15600	(69200)				1.83	II	15100	(67100)	40	**4E195**	28	(-),(#)
			1.83	II	28300	(126000)				1.83	II	27000	(120000)	40	**4F195**	28	(-),(#)
41.2	56800	(6410)	1.00	I	11200	(49700)	49.7	47000	(5310)	1.00	I	11100	(49400)	40	**4D175**	35	
			1.33	I	11200	(49700)				1.38	I	11100	(49400)	40	**4D180**	35	(#)
			1.38	I	16000	(71400)				1.38	I	15700	(69600)	40	**4E180**	35	(#)
			1.50	II	16000	(71400)				1.50	II	15700	(69600)	40	**4E185**	35	(#)
			1.53	II	16000	(71400)				1.69	II	15700	(69600)	40	**4E190**	35	(-),(#)
			1.53	II	16000	(71400)				1.83	II	15700	(69600)	40	**4E195**	35	(-),(#)
			1.50	II	29700	(132000)				1.50	II	28500	(127000)	40	**4F185**	35	(#)
			1.69	II	29700	(132000)				1.69	II	28500	(127000)	40	**4F190**	35	(-),(#)
			1.83	II	29700	(132000)				1.83	II	28500	(127000)	40	**4F195**	35	(-),(#)
37.7	62100	(7010)	1.00	I	11200	(49800)	45.5	51400	(5810)	1.00	I	11200	(49600)	40	**4D175**	39	
			1.22	I	11200	(49800)				1.38	I	11200	(49600)	40	**4D180**	39	
			1.38	I	16200	(72100)				1.38	I	15900	(70500)	40	**4E180**	39	
			1.40	II	16200	(72100)				1.50	II	15900	(70500)	40	**4E185**	39	
			1.40	II	16200	(72100)				1.69	II	15900	(70500)	40	**4E190**	39	(-)
			1.40	II	16200	(72100)				1.69	II	15900	(70500)	40	**4E195**	39	(-)
			1.38	I	29500	(131000)				1.38	I	29100	(129000)	40	**4F180**	39	
			1.50	II	29500	(131000)				1.50	II	29100	(129000)	40	**4F185**	39	
			1.69	II	29500	(131000)				1.69	II	29100	(129000)	40	**4F190**	39	(-)
			1.83	II	29500	(131000)				1.83	II	29100	(129000)	40	**4F195**	39	(-)

Sold & Serviced By:
ELECTROMATE
Toll Free Phone (877) SERVO98
www.electromate.com
sales@electromate.com

Notes: [1] For Y4 Double Reductions (4XXXDX) refer to the above table; for Y4 single reduction refer to tables on pages 2.91-2.130.
[2] Variable Frequency Drive (VFD) notes (see page 2.8 for Constant Torque Speed Ranges):
All 1HP+ motors require EP suffix in model number and can be used with a VFD, unless noted.
(-) = For Inverter Operation, starting condition may require ambient temperature of 5° C or higher.
(#) = Mounting positions Y2, F2, G2, K2, V2, W2 operation is limited to 75 %ED (duty cycle) for a 10 minute total cycle (7.5 minutes max. on time).

Standard Mounting Selection Tables

40 HP (30 kW)

Standard Mounting Positions:

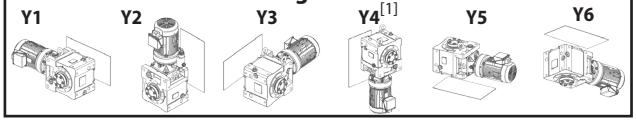

Dimension Pages:

Single Reduction	2.132-2.143
Single Reduction,Y2	2.144
Double Reduction	2.146-2.161
Double Reduction, Y2	2.162

Frequency	50 Hz	60 Hz
Input Speed	1450 RPM	1750 RPM
Number of Poles	4	

50Hz						60 Hz						Selection			
Output Speed (RPM)	Output Torque		Service Factor		Solid Shaft Overhung Load		Output Speed (RPM)	Output Torque		Service Factor		Solid Shaft Overhung Load		Base			VFD[2]
	in•lbs	(N•m)	SF	AGMA Class	lbs	(N)		in•lbs	(N•m)	SF	AGMA Class	lbs	(N)	Motor Power Code	Frame Size	Ratio	
31.9	73400	(8290)	1.00	I	11100	(49400)	38.5	60800	(6870)	1.00	I	11200	(49800)	40	**4D175**	46	
			1.05	I	11100	(49400)				1.24	I	11200	(49800)	40	**4D180**	46	
			1.19	I	16500	(73200)				1.38	I	16200	(72000)	40	**4E180**	46	
			1.19	I	16500	(73200)				1.43	II	16200	(72000)	40	**4E185**	46	
			1.19	I	16500	(73200)				1.43	II	16200	(72000)	40	**4E190**	46	(-)
			1.19	I	16500	(73200)				1.43	II	16200	(72000)	40	**4E195**	46	(-)
			1.38	I	29000	(129000)				1.38	I	29500	(131000)	40	**4F180**	46	
			1.50	II	29000	(129000)				1.50	II	29500	(131000)	40	**4F185**	46	
			1.69	II	29000	(129000)				1.69	II	29500	(131000)	40	**4F190**	46	(-)
			1.83	II	29000	(129000)				1.83	II	29500	(131000)	40	**4F195**	46	(-)
27.6	84700	(9560)	0.91	-	7520	(33500)	33.3	70100	(7920)	0.91	-	11100	(49600)	40	**4D175**	53	
			0.91	-	7520	(33500)				1.08	I	11100	(49600)	40	**4D180**	53	
			1.00	I	16600	(73800)				1.00	I	16400	(72900)	40	**4E175**	53	
			1.03	I	16600	(73800)				1.08	I	16400	(72900)	40	**4E180**	53	
			1.03	I	16600	(73800)				1.24	I	16400	(72900)	40	**4E185**	53	
			1.03	I	16600	(73800)				1.24	I	16400	(72900)	40	**4E190**	53	(-)
			1.03	I	16600	(73800)				1.24	I	16400	(72900)	40	**4E195**	53	(-)
			1.08	I	28500	(127000)				1.08	I	29100	(130000)	40	**4F180**	53	
			1.30	I	28500	(127000)				1.30	I	29100	(130000)	40	**4F185**	53	
			1.69	II	28500	(127000)				1.69	II	29100	(130000)	40	**4F190**	53	(-)
			1.83	II	28500	(127000)				1.83	II	29100	(130000)	40	**4F195**	53	(-)
24.4	95900	(10800)	0.80	-	16600	(74000)	29.4	79500	(8980)	0.80	-	16500	(73600)	40	**4E175**	60	
			0.91	-	16600	(74000)				1.02	I	16500	(73600)	40	**4E180**	60	
			0.91	-	16600	(74000)				1.09	I	16500	(73600)	40	**4E185**	60	
			0.91	-	16600	(74000)				1.09	I	16500	(73600)	40	**4E190**	60	(-)
			0.91	-	16600	(74000)				1.09	I	16500	(73600)	40	**4E195**	60	(-)
			1.02	I	28000	(125000)				1.02	I	28700	(128000)	40	**4F180**	60	
			1.27	I	28000	(125000)				1.30	I	28700	(128000)	40	**4F185**	60	
			1.66	II	28000	(125000)				1.69	II	28700	(128000)	40	**4F190**	60	(-)
			1.66	II	28000	(125000)				1.83	II	28700	(128000)	40	**4F195**	60	(-)
21.6	108000	(12200)	0.80	-	16600	(73800)	26.0	89800	(10100)	0.97	-	16600	(73900)	40	**4E180**	67	
			0.80	-	16600	(73800)				0.97	-	16600	(73900)	40	**4E185**	67	
			0.80	-	16600	(73800)				0.97	-	16600	(73900)	40	**4E190**	67	
			0.80	-	16600	(73800)				0.97	-	16600	(73900)	40	**4E195**	67	
			1.00	I	27500	(122000)				1.00	I	28300	(126000)	40	**4F180**	67	
			1.27	I	27500	(122000)				1.30	I	28300	(126000)	40	**4F185**	67	
			1.37	I	27500	(122000)				1.37	I	28300	(126000)	40	**4F190**	67	
			1.47	II	27500	(122000)				1.60	II	28300	(126000)	40	**4F195**	67	

Notes: [1] For Y4 Double Reductions (4XXXDX) refer to the above table; for Y4 single reduction refer to tables on pages 2.91-2.130..

[2] Variable Frequency Drive (VFD) notes (see page 2.8 for Constant Torque Speed Ranges):
All 1HP+ motors require EP suffix in model number and can be used with a VFD, unless noted.
(-) = For Inverter Operation, starting condition may require ambient temperature of 5° C or higher.

Standard Mounting Selection Tables

40 HP (30 kW)

Standard Mounting Positions:

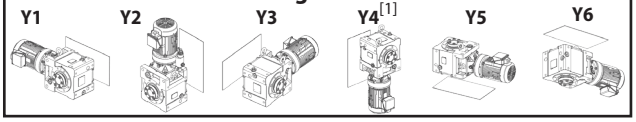

Dimension Pages:

Single Reduction	2.132-2.143
Single Reduction,Y2	2.144
Double Reduction	2.146-2.161
Double Reduction, Y2	2.162

Frequency	50 Hz	60 Hz
Input Speed	1450 RPM	1750 RPM
Number of Poles	4	

50Hz						60 Hz						Selection			
Output Speed (RPM)	Output Torque		Service Factor		Solid Shaft Overhung Load		Output Speed (RPM)	Output Torque		Service Factor		Solid Shaft Overhung Load		Base			VFD[2]
	in•lbs	(N•m)	SF	AGMA Class	lbs	(N)		in•lbs	(N•m)	SF	AGMA Class	lbs	(N)	Motor Power Code	Frame Size	Ratio	
19.7	119000	(13400)	1.00	I	27000	(120000)	23.8	98200	(11100)	1.00	I	27900	(124000)	40	**4F180**	74	
			1.27	I	27000	(120000)				1.30	I	27900	(124000)	40	**4F185**	74	
			1.34	I	27000	(120000)				1.37	I	27900	(124000)	40	**4F190**	74	
			1.34	I	27000	(120000)				1.60	II	27900	(124000)	40	**4F195**	74	
18.1	129000	(14600)	0.80	-	26600	(118000)	21.9	107000	(12100)	0.80	-	27500	(123000)	40	**4F180**	80	
			1.00	I	26600	(118000)				1.00	I	27500	(123000)	40	**4F185**	80	
			1.17	I	26600	(118000)				1.17	I	27500	(123000)	40	**4F190**	80	
			1.24	I	26600	(118000)				1.35	I	27500	(123000)	40	**4F195**	80	
16.6	141000	(15900)	0.80	-	26100	(116000)	20.0	117000	(13200)	0.80	-	27100	(121000)	40	**4F180**	88	
			1.00	I	26100	(116000)				1.00	I	27100	(121000)	40	**4F185**	88	
			1.13	I	26100	(116000)				1.17	I	27100	(121000)	40	**4F190**	88	
			1.13	I	26100	(116000)				1.35	I	27100	(121000)	40	**4F195**	88	
14.3	164000	(18500)	0.80	-	25100	(112000)	17.2	136000	(15300)	0.80	-	26300	(117000)	40	**4F185**	102	
			0.97	-	25100	(112000)				1.02	I	26300	(117000)	40	**4F190**	102	
			0.97	-	25100	(112000)				1.17	I	26300	(117000)	40	**4F195**	102	
12.9	181000	(20400)	0.81	-	24400	(108000)	15.6	150000	(16900)	0.81	-	25700	(114000)	40	**4F190**	112	
			0.88	-	24400	(108000)				1.00	I	25700	(114000)	40	**4F195**	112	

Sold & Serviced By:
ELECTROMATE
Toll Free Phone (877) SERVO98
www.electromate.com
sales@electromate.com

Notes: [1] For Y4 Double Reductions (4XXXDX) refer to the above table; for Y4 single reduction refer to tables on pages 2.91-2.130.
[2] Variable Frequency Drive (VFD) notes (see page 2.8 for Constant Torque Speed Ranges):
All 1HP+ motors require EP suffix in model number and can be used with a VFD, unless noted.

Standard Mounting Selection Tables

50 HP (37 kW)

Standard Mounting Positions:

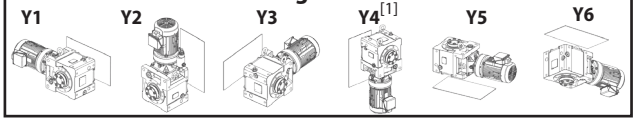

Dimension Pages:

Single Reduction	2.132-2.143
Single Reduction,Y2	2.144
Double Reduction	2.146-2.161
Double Reduction, Y2	2.162

Frequency	50 Hz	60 Hz
Input Speed	1450 RPM	1750 RPM
Number of Poles	4	

50Hz							60 Hz						Selection			
Output Speed (RPM)	Output Torque		Service Factor		Solid Shaft Overhung Load		Output Speed (RPM)	Output Torque		Service Factor		Solid Shaft Overhung Load		Base			VFD[2]
	in•lbs	(N•m)	SF	AGMA Class	lbs	(N)		in•lbs	(N•m)	SF	AGMA Class	lbs	(N)	Motor Power Code	Frame Size	Ratio	
138	20900	(2360)	1.44	II	9280	(41300)	167	17300	(1950)	1.44	II	8960	(39900)	50	**4D180**	11	(-),(#)
			1.62	II	9280	(41300)				1.62	II	8960	(39900)	50	**4D185**	11	(-),(#)
			1.85	II	12600	(56100)				1.85	II	12100	(53800)	50	**4E190**	11	(-),(#)
			2.03	III	12600	(56100)				2.03	III	12100	(53800)	50	**4E195**	11	(-),(#)
113	25500	(2880)	1.44	II	9610	(42700)	137	21100	(2380)	1.44	II	9330	(41500)	50	**4D180**	13	(-),(#)
			1.62	II	9610	(42700)				1.62	II	9330	(41500)	50	**4D185**	13	(-),(#)
			1.85	II	13100	(58300)				1.85	II	12600	(56100)	50	**4E190**	13	(-),(#)
			2.03	III	13100	(58300)				2.03	III	12600	(56100)	50	**4E195**	13	(-),(#)
104	27800	(3150)	1.44	II	9730	(43300)	125	23100	(2610)	1.44	II	9470	(42100)	50	**4D180**	14	(-),(#)
			1.62	II	9730	(43300)				1.62	II	9470	(42100)	50	**4D185**	14	(-),(#)
			1.85	II	13300	(59300)				1.85	II	12800	(57100)	50	**4E190**	14	(-),(#)
			2.03	III	13300	(59300)				2.03	III	12800	(57100)	50	**4E195**	14	(-),(#)
90.6	31800	(3590)	1.44	II	9840	(43800)	109	26400	(2980)	1.44	II	9600	(42700)	50	**4D180**	16	(-),(#)
			1.62	II	9840	(43800)				1.62	II	9600	(42700)	50	**4D185**	16	(-),(#)
			1.85	II	13500	(60200)				1.85	II	13100	(58100)	50	**4E190**	16	(-),(#)
			2.03	III	13500	(60200)				2.03	III	13100	(58100)	50	**4E195**	16	(-),(#)
82.9	34800	(3930)	1.44	II	9950	(44200)	100.0	28800	(3260)	1.44	II	9720	(43200)	50	**4D180**	18	(-),(#)
			1.62	II	9950	(44200)				1.62	II	9720	(43200)	50	**4D185**	18	(-),(#)
			1.62	II	13800	(61300)				1.62	II	13300	(59200)	50	**4E185**	18	(-),(#)
			1.85	II	13800	(61200)				1.85	II	13300	(59100)	50	**4E190**	18	(-),(#)
			2.03	III	13800	(61200)				2.03	III	13300	(59100)	50	**4E195**	18	(-),(#)
			2.03	III	24600	(110000)				2.03	III	23500	(105000)	50	**4F195**	18	(-),(#)
69.0	41800	(4720)	1.12	I	10100	(45100)	83.3	34600	(3910)	1.12	I	9970	(44300)	50	**4D180**	21	(-),(#)
			1.22	I	10100	(45100)				1.22	I	9970	(44300)	50	**4D185**	21	(-),(#)
			1.37	I	14300	(63400)				1.37	I	13800	(61500)	50	**4E190**	21	(-),(#)
			1.49	II	14300	(63400)				1.49	II	13800	(61500)	50	**4E195**	21	(-),(#)
64.7	44500	(5030)	1.12	I	10200	(45200)	78.1	36900	(4170)	1.12	I	10000	(44600)	50	**4D180**	22	(-),(#)
			1.22	I	10200	(45200)				1.22	I	10000	(44600)	50	**4D185**	22	(-),(#)
			1.37	I	14400	(64000)				1.37	I	14000	(62200)	50	**4E190**	22	(-),(#)
			1.49	II	14400	(64000)				1.49	II	14000	(62200)	50	**4E195**	22	(-),(#)
59.2	48700	(5500)	1.12	I	10200	(45400)	71.4	40400	(4560)	1.12	I	10100	(45000)	50	**4D180**	25	(-),(#)
			1.22	I	10200	(45400)				1.22	I	10100	(45000)	50	**4D185**	25	(-),(#)
			1.22	I	14600	(64800)				1.22	I	14200	(63100)	50	**4E185**	25	(-),(#)
			1.37	I	14600	(64800)				1.37	I	14200	(63100)	50	**4E190**	25	(-),(#)

Notes: [1] For Y4 Double Reductions (4XXXDX) refer to the above table; for Y4 single reduction refer to tables on pages 2.91-2.130..

[2] Variable Frequency Drive (VFD) notes (see page 2.8 for Constant Torque Speed Ranges):
All 1HP+ motors require EP suffix in model number and can be used with a VFD, unless noted.
(-) = For Inverter Operation, starting condition may require ambient temperature of 5° C or higher.
(#) = Mounting positions Y2, F2, G2, K2, V2, W2 operation is limited to 75 %ED (duty cycle) for a 10 minute total cycle (7.5 minutes max. on time).

Standard Mounting Selection Tables

50 HP (37 kW)

Standard Mounting Positions:

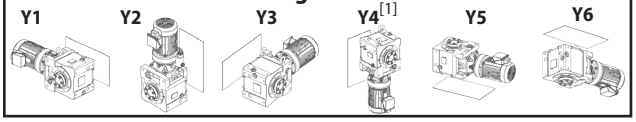

Dimension Pages:

Single Reduction	2.132-2.143
Single Reduction,Y2	2.144
Double Reduction	2.146-2.161
Double Reduction, Y2	2.162

Frequency	50 Hz	60 Hz
Input Speed	1450 RPM	1750 RPM
Number of Poles	4	

50Hz							60 Hz							Selection			
Output Speed (RPM)	Output Torque		Service Factor		Solid Shaft Overhung Load		Output Speed (RPM)	Output Torque		Service Factor		Solid Shaft Overhung Load		Base			VFD[2]
	in•lbs	*(N•m)*	SF	AGMA Class	lbs	*(N)*		in•lbs	*(N•m)*	SF	AGMA Class	lbs	*(N)*	Motor Power Code	Frame Size	Ratio	
51.8	55700	*(6290)*	1.12	I	10200	*(45500)*	62.5	46100	*(5210)*	1.12	I	10200	*(45300)*	50	**4D180**	28	(-),(#)
			1.22	I	10200	*(45500)*				1.22	I	10200	*(45300)*	50	**4D185**	28	(-),(#)
			1.12	I	14800	*(65800)*				1.12	I	14500	*(64300)*	50	**4E180**	28	(-),(#)
			1.22	I	14800	*(65800)*				1.22	I	14500	*(64300)*	50	**4E185**	28	(-),(#)
			1.37	I	14800	*(65800)*				1.37	I	14500	*(64300)*	50	**4E190**	28	(-),(#)
			1.49	II	14800	*(65800)*				1.49	II	14500	*(64300)*	50	**4E195**	28	(-),(#)
			1.49	II	27600	*(123000)*				1.49	II	26500	*(118000)*	50	**4F195**	28	(-),(#)
41.2	70000	*(7910)*	1.08	I	10100	*(45000)*	49.7	58000	*(6550)*	1.12	I	10200	*(45400)*	50	**4D180**	35	(#)
			1.12	I	15100	*(67100)*				1.12	I	14800	*(66100)*	50	**4E180**	35	(#)
			1.22	I	15100	*(67100)*				1.22	I	14800	*(66100)*	50	**4E185**	35	(#)
			1.24	I	15100	*(67100)*				1.37	I	14800	*(66100)*	50	**4E190**	35	(-),(#)
			1.24	I	15100	*(67100)*				1.49	II	14800	*(66100)*	50	**4E195**	35	(-),(#)
			1.22	I	28800	*(128000)*				1.22	I	27800	*(123000)*	50	**4F185**	35	(#)
			1.37	I	28800	*(128000)*				1.37	I	27800	*(123000)*	50	**4F190**	35	(-),(#)
			1.49	II	28800	*(128000)*				1.49	II	27800	*(123000)*	50	**4F195**	35	(-),(#)
37.7	76600	*(8650)*	0.99	-	10000	*(44600)*	45.5	63400	*(7170)*	1.12	I	10200	*(45300)*	50	**4D180**	39	
			1.12	I	15200	*(67400)*				1.12	I	15000	*(66600)*	50	**4E180**	39	
			1.14	I	15200	*(67400)*				1.22	I	15000	*(66600)*	50	**4E185**	39	
			1.14	I	15200	*(67400)*				1.37	I	15000	*(66600)*	50	**4E190**	39	(-)
			1.14	I	15200	*(67400)*				1.37	I	15000	*(66600)*	50	**4E195**	39	(-)
			1.12	I	28900	*(128000)*				1.12	I	28300	*(126000)*	50	**4F180**	39	
			1.22	I	28900	*(128000)*				1.22	I	28300	*(126000)*	50	**4F185**	39	
			1.37	I	28900	*(128000)*				1.37	I	28300	*(126000)*	50	**4F190**	39	(-)
			1.49	II	28900	*(128000)*				1.49	II	28300	*(126000)*	50	**4F195**	39	(-)
31.9	90500	*(10200)*	0.96	-	15200	*(67600)*	38.5	75000	*(8470)*	1.12	I	15100	*(67300)*	50	**4E180**	46	
			0.96	-	15200	*(67600)*				1.16	I	15100	*(67300)*	50	**4E185**	46	
			0.96	-	15200	*(67600)*				1.16	I	15100	*(67300)*	50	**4E190**	46	(-)
			0.96	-	15200	*(67600)*				1.16	I	15100	*(67300)*	50	**4E195**	46	(-)
			1.12	I	28300	*(126000)*				1.12	I	28900	*(129000)*	50	**4F180**	46	
			1.22	I	28300	*(126000)*				1.22	I	28900	*(129000)*	50	**4F185**	46	
			1.37	I	28300	*(126000)*				1.37	I	28900	*(129000)*	50	**4F190**	46	(-)
			1.49	II	28300	*(126000)*				1.49	II	28900	*(129000)*	50	**4F195**	46	(-)

Notes: [1] For Y4 Double Reductions (4XXXDX) refer to the above table; for Y4 single reduction refer to tables on pages 2.91-2.130.

[2] Variable Frequency Drive (VFD) notes (see page 2.8 for Constant Torque Speed Ranges):
All 1HP+ motors require EP suffix in model number and can be used with a VFD, unless noted.
(-) = For Inverter Operation, starting condition may require ambient temperature of 5° C or higher.
(#) = Mounting positions Y2, F2, G2, K2, V2, W2 operation is limited to 75 %ED (duty cycle) for a 10 minute total cycle (7.5 minutes max. on time).

Standard Mounting Selection Tables

50 HP (37 kW)

Standard Mounting Positions:

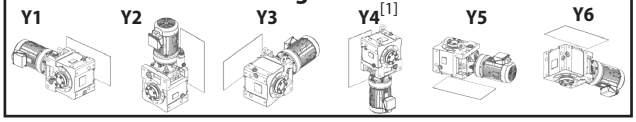

Dimension Pages:

Single Reduction	2.132-2.143
Single Reduction,Y2	2.144
Double Reduction	2.146-2.161
Double Reduction, Y2	2.162

Frequency	50 Hz	60 Hz
Input Speed	1450 RPM	1750 RPM
Number of Poles	4	

50Hz						60 Hz						Selection			
Output Speed (RPM)	Output Torque		Service Factor		Solid Shaft Overhung Load		Output Speed (RPM)	Output Torque		Service Factor		Solid Shaft Overhung Load		Base			VFD[2]
	in•lbs	(N•m)	SF	AGMA Class	lbs	(N)		in•lbs	(N•m)	SF	AGMA Class	lbs	(N)	Motor Power Code	Frame Size	Ratio	
27.6	104000	(11800)	0.83	-	15100	(67300)	33.3	86500	(9770)	0.88	-	15200	(67600)	50	**4E180**	53	
			0.83	-	15100	(67300)				1.01	I	15200	(67600)	50	**4E185**	53	
			0.83	-	15100	(67300)				1.01	I	15200	(67600)	50	**4E190**	53	(-)
			0.83	-	15100	(67300)				1.01	I	15200	(67600)	50	**4E195**	53	(-)
			0.88	-	27700	(123000)				0.88	-	28400	(126000)	50	**4F180**	53	
			1.05	I	27700	(123000)				1.05	I	28400	(126000)	50	**4F185**	53	
			1.37	I	27700	(123000)				1.37	I	28400	(126000)	50	**4F190**	53	(-)
			1.49	II	27700	(123000)				1.49	II	28400	(126000)	50	**4F195**	53	(-)
24.4	118000	(13400)	0.83	-	27100	(120000)	29.4	98000	(11100)	0.83	-	27900	(124000)	50	**4F180**	60	
			1.03	I	27100	(120000)				1.05	I	27900	(124000)	50	**4F185**	60	
			1.35	I	27100	(120000)				1.37	I	27900	(124000)	50	**4F190**	60	(-)
			1.35	I	27100	(120000)				1.49	II	27900	(124000)	50	**4F195**	60	(-)
21.6	134000	(15100)	0.81	-	26400	(117000)	26.0	111000	(12500)	0.81	-	27400	(122000)	50	**4F180**	67	
			1.03	I	26400	(117000)				1.05	I	27400	(122000)	50	**4F185**	67	
			1.11	I	26400	(117000)				1.11	I	27400	(122000)	50	**4F190**	67	
			1.19	I	26400	(117000)				1.30	I	27400	(122000)	50	**4F195**	67	
19.7	146000	(16500)	0.81	-	25900	(115000)	23.8	121000	(13700)	0.81	-	26900	(120000)	50	**4F180**	74	
			1.03	I	25900	(115000)				1.05	I	26900	(120000)	50	**4F185**	74	
			1.09	I	25900	(115000)				1.11	I	26900	(120000)	50	**4F190**	74	
			1.09	I	25900	(115000)				1.30	I	26900	(120000)	50	**4F195**	74	
18.1	159000	(18000)	0.81	-	25300	(113000)	21.9	132000	(14900)	0.81	-	26500	(118000)	50	**4F185**	80	
			0.95	-	25300	(113000)				0.95	-	26500	(118000)	50	**4F190**	80	
			1.00	I	25300	(113000)				1.09	I	26500	(118000)	50	**4F195**	80	
16.6	174000	(19700)	0.81	-	24600	(110000)	20.0	144000	(16300)	0.81	-	25900	(115000)	50	**4F185**	88	
			0.92	-	24600	(110000)				0.95	-	25900	(115000)	50	**4F190**	88	
			0.92	-	24600	(110000)				1.09	I	25900	(115000)	50	**4F195**	88	

Sold & Serviced By:
ELECTROMATE
Toll Free Phone (877) SERVO98
www.electromate.com
sales@electromate.com

Notes: [1] For Y4 Double Reductions (4XXXDX) refer to the above table; for Y4 single reduction refer to tables on pages 2.91-2.130..
[2] Variable Frequency Drive (VFD) notes (see page 2.8 for Constant Torque Speed Ranges):
All 1HP+ motors require EP suffix in model number and can be used with a VFD, unless noted.
(-) = For Inverter Operation, starting condition may require ambient temperature of 5° C or higher.

Standard Mounting Selection Tables

60 HP (45 kW)

Standard Mounting Positions:

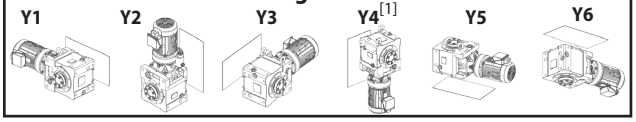

Dimension Pages:

Single Reduction	2.132-2.143
Single Reduction,Y2	2.144
Double Reduction	2.146-2.161
Double Reduction, Y2	2.162

Frequency	50 Hz	60 Hz
Input Speed	1450 RPM	1750 RPM
Number of Poles	4	

50Hz							60 Hz						Selection			
Output Speed (RPM)	Output Torque		Service Factor		Solid Shaft Overhung Load		Output Speed (RPM)	Output Torque		Service Factor		Solid Shaft Overhung Load		Base			VFD[2]
	in•lbs	(N•m)	SF	AGMA Class	lbs	(N)		in•lbs	(N•m)	SF	AGMA Class	lbs	(N)	Motor Power Code	Frame Size	Ratio	
138	25400	(2870)	1.52	II	12300	(54600)	167	21000	(2380)	1.52	II	11800	(52600)	60	**4E190**	11	(#)
			1.67	II	12300	(54600)				1.67	II	11800	(52600)	60	**4E195**	11	(#)
113	31000	(3500)	1.52	II	12700	(56400)	137	25700	(2900)	1.52	II	12300	(54500)	60	**4E190**	13	(#)
			1.67	II	12700	(56400)				1.67	II	12300	(54500)	60	**4E195**	13	(#)
104	33900	(3830)	1.52	II	12900	(57300)	125	28100	(3170)	1.52	II	12500	(55500)	60	**4E190**	14	(#)
			1.67	II	12900	(57300)				1.67	II	12500	(55500)	60	**4E195**	14	(#)
90.6	38700	(4370)	1.52	II	13000	(58000)	109	32100	(3620)	1.52	II	12700	(56300)	60	**4E190**	16	(#)
			1.67	II	13000	(58000)				1.67	II	12700	(56300)	60	**4E195**	16	(#)
82.9	42300	(4780)	1.52	II	13200	(58800)	100.0	35100	(3960)	1.52	II	12800	(57200)	60	**4E190**	18	(#)
			1.67	II	13200	(58800)				1.67	II	12800	(57200)	60	**4E195**	18	(#)
			1.67	II	24100	(107000)				1.67	II	23100	(103000)	60	**4F195**	18	(#)
69.0	50800	(5740)	1.12	I	13600	(60400)	83.3	42100	(4750)	1.12	I	13300	(59100)	60	**4E190**	21	(#)
			1.22	I	13600	(60400)				1.22	I	13300	(59100)	60	**4E195**	21	(#)
64.7	54200	(6120)	1.12	I	13700	(60800)	78.1	44900	(5070)	1.12	I	13400	(59600)	60	**4E190**	22	(#)
			1.22	I	13700	(60800)				1.22	I	13400	(59600)	60	**4E195**	22	(#)
59.2	59300	(6690)	1.12	I	13800	(61300)	71.4	49100	(5550)	1.12	I	13500	(60200)	60	**4E190**	25	(#)
			1.22	I	13800	(61300)				1.22	I	13500	(60200)	60	**4E195**	25	(#)
51.8	67700	(7650)	1.12	I	13900	(61900)	62.5	56100	(6340)	1.12	I	13700	(61000)	60	**4E190**	28	(#)
			1.22	I	13900	(61900)				1.22	I	13700	(61000)	60	**4E195**	28	(#)
			1.22	I	26800	(119000)				1.22	I	25800	(115000)	60	**4F195**	28	(#)
41.2	85100	(9620)	1.02	I	14000	(62100)	49.7	70500	(7970)	1.12	I	13900	(62000)	60	**4E190**	35	(#)
			1.02	I	14000	(62100)				1.22	I	13900	(62000)	60	**4E195**	35	(#)
			1.12	I	27800	(124000)				1.12	I	26900	(120000)	60	**4F190**	35	(#)
			1.22	I	27800	(124000)				1.22	I	26900	(120000)	60	**4F195**	35	(#)
37.7	93100	(10500)	0.93	-	13900	(62000)	45.5	77200	(8720)	1.12	I	14000	(62100)	60	**4E190**	39	
			0.93	-	13900	(62000)				1.13	I	14000	(62100)	60	**4E195**	39	
			1.12	I	28100	(125000)				1.12	I	27400	(122000)	60	**4F190**	39	
			1.22	I	28100	(125000)				1.22	I	27400	(122000)	60	**4F195**	39	
31.9	110000	(12400)	1.12	I	27400	(122000)	38.5	91200	(10300)	1.12	I	28200	(125000)	60	**4F190**	46	
			1.22	I	27400	(122000)				1.22	I	28200	(125000)	60	**4F195**	46	
27.6	127000	(14300)	1.12	I	26700	(119000)	33.3	105000	(11900)	1.12	I	27600	(123000)	60	**4F190**	53	
			1.22	I	26700	(119000)				1.22	I	27600	(123000)	60	**4F195**	53	
24.4	144000	(16300)	1.11	I	25900	(115000)	29.4	119000	(13500)	1.12	I	27000	(120000)	60	**4F190**	60	
			1.11	I	25900	(115000)				1.22	I	27000	(120000)	60	**4F195**	60	
21.6	163000	(18400)	0.91	-	25100	(112000)	26.0	135000	(15200)	0.91	-	26300	(117000)	60	**4F190**	67	
			0.98	-	25100	(112000)				1.07	I	26300	(117000)	60	**4F195**	67	
19.7	178000	(20100)	0.90	-	24500	(109000)	23.8	147000	(16600)	0.91	-	25800	(115000)	60	**4F190**	74	
			0.90	-	24500	(109000)				1.07	I	25800	(115000)	60	**4F195**	74	
18.1	193000	(21900)	0.82	-	21100	(94000)	21.9	160000	(18100)	0.90	-	25200	(112000)	60	**4F195**	80	

Notes: [1] For Y4 Double Reductions (4XXXDX) refer to the above table; for Y4 single reduction refer to tables on pages 2.91-2.130.

[2] Variable Frequency Drive (VFD) notes (see page 2.8 for Constant Torque Speed Ranges):
All 1HP+ motors require EP suffix in model number and can be used with a VFD, unless noted.
(#) = Mounting positions Y2, F2, G2, K2, V2, W2 operation is limited to 75 %ED (duty cycle) for a 10 minute total cycle (7.5 minutes max. on time).

Y4 Mounting Single Reduction Selection Tables

1/4 HP (0.2 kW)

Y4 Mounting Position[1]:

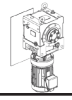

Dimension Pages:

Single Reduction	2.132-2.143
Single Reduction,Y2	2.144
Double Reduction	2.146-2.161
Double Reduction, Y2	2.162

Frequency	50 Hz	60 Hz
Input Speed	1450 RPM	1750 RPM
Number of Poles	4	

50Hz							60 Hz							Selection			
Output Speed (RPM)	Output Torque		Service Factor		Solid Shaft Overhung Load		Output Speed (RPM)	Output Torque		Service Factor[1]		Solid Shaft Overhung Load		Base			VFD[1]
	in•lbs	*(N•m)*	SF	AGMA Class	lbs	*(N)*		in•lbs	*(N•m)*	SF	AGMA Class	lbs	*(N)*	Motor Power Code	Frame Size	Ratio	
8.12	1920	*(217)*	2.80	III	6090	*(27100)*	9.80	1590	*(180)*	2.80	III	6110	*(27200)*	02	**4A100**	179	(a)
7.02	2220	*(251)*	2.58	III	6070	*(27000)*	8.47	1840	*(208)*	2.58	III	6090	*(27100)*	02	**4A100**	207	(a)
5.84	2670	*(302)*	2.18	III	6030	*(26800)*	7.04	2210	*(250)*	2.18	III	6070	*(27000)*	02	**4A100**	249	(a)
			2.53	III	6030	*(26800)*				2.81	III	6070	*(27000)*	02	**4A105**	249	(a)
4.76	3270	*(370)*	2.17	III	5960	*(26500)*	5.75	2710	*(306)*	2.17	III	6020	*(26800)*	02	**4A100**	305	(a)
			2.51	III	5960	*(26500)*				2.83	III	6020	*(26800)*	02	**4A105**	305	(a)
3.48	4480	*(506)*	1.05	I	5790	*(25800)*	4.20	3710	*(419)*	1.05	I	5910	*(26300)*	02	**4A100**	417	(a)
			1.43	II	5790	*(25800)*				1.43	II	5910	*(26300)*	02	**4A105**	417	(a)

Sold & Serviced By:
ELECTROMATE
Toll Free Phone (877) SERVO98
www.electromate.com
sales@electromate.com

Notes: [1] For double reduction and 1/8 HP single reduction Y4 ratings, refer to selection tables on pages 2.91 thru 2.130.
[2] Variable Frequency Drive (VFD) notes (see page 2.8 for Constant Torque Speed Ranges):

Y4 Mounting Single Reduction Selection Tables

1/3 HP (0.25 kW)

Y4 Mounting Position[1]:

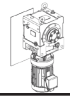

Dimension Pages:

Single Reduction	2.132-2.143
Single Reduction,Y2	2.144
Double Reduction	2.146-2.161
Double Reduction, Y2	2.162

Frequency	50 Hz	60 Hz
Input Speed	1450 RPM	1750 RPM
Number of Poles	4	

50Hz							60 Hz						Selection			
Output Speed (RPM)	Output Torque		Service Factor		Solid Shaft Overhung Load		Output Speed (RPM)	Output Torque		Service Factor[1]		Solid Shaft Overhung Load		Base			VFD[1]
	in•lbs	*(N•m)*	SF	AGMA Class	lbs	*(N)*		in•lbs	*(N•m)*	SF	AGMA Class	lbs	*(N)*	Motor Power Code	Frame Size	Ratio	
9.63	2020	*(228)*	3.12	III	6080	*(27000)*	11.6	1680	*(189)*	3.12	III	6100	*(27100)*	03	**4A100**	151	(a)
8.12	2400	*(271)*	2.24	III	6050	*(26900)*	9.80	1990	*(225)*	2.24	III	6080	*(27100)*	03	**4A100**	179	(a)
			3.10	III	6050	*(26900)*				3.10	III	6080	*(27100)*	03	**4A105**	179	(a)
7.02	2770	*(313)*	2.06	III	6020	*(26800)*	8.47	2300	*(260)*	2.06	III	6060	*(27000)*	03	**4A100**	207	(a)
			2.72	III	6020	*(26800)*				2.83	III	6060	*(27000)*	03	**4A105**	207	(a)
5.84	3340	*(377)*	1.74	II	5950	*(26500)*	7.04	2770	*(313)*	1.74	II	6020	*(26800)*	03	**4A100**	249	(a)
			2.02	III	5950	*(26500)*				2.24	III	6020	*(26800)*	03	**4A105**	249	(a)
4.76	4090	*(462)*	1.73	II	5850	*(26000)*	5.75	3390	*(383)*	1.73	II	5950	*(26500)*	03	**4A100**	305	(a)
			2.01	III	5850	*(26000)*				2.26	III	5950	*(26500)*	03	**4A105**	305	(a)
3.48	5600	*(632)*	0.84	-	5580	*(24800)*	4.20	4640	*(524)*	0.84	-	5760	*(25600)*	03	**4A100**	417	(a)
			1.15	I	5580	*(24800)*				1.15	I	5760	*(25600)*	03	**4A105**	417	(a)

Sold & Serviced By:
ELECTROMATE
Toll Free Phone (877) SERVO98
www.electromate.com
sales@electromate.com

Notes: [1] For double reduction and 1/8 HP single reduction Y4 ratings, refer to selection tables on pages 2.91 thru 2.130.
[2] Variable Frequency Drive (VFD) notes (see page 2.8 for Constant Torque Speed Ranges):

Y4 Mounting Single Reduction Selection Tables

1/2 HP (0.4 kW)

Y4 Mounting Position[1]:

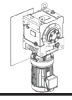

Dimension Pages:

Single Reduction	2.132-2.143
Single Reduction,Y2	2.144
Double Reduction	2.146-2.161
Double Reduction, Y2	2.162

Frequency	50 Hz	60 Hz
Input Speed	1450 RPM	1750 RPM
Number of Poles	4	

50Hz							60 Hz							Selection			
Output Speed (RPM)	Output Torque		Service Factor		Solid Shaft Overhung Load		Output Speed (RPM)	Output Torque		Service Factor[1]		Solid Shaft Overhung Load		Base			VFD[1]
	in•lbs	*(N•m)*	SF	AGMA Class	lbs	*(N)*		in•lbs	*(N•m)*	SF	AGMA Class	lbs	*(N)*	Motor Power Code	Frame Size	Ratio	
18.1	1720	*(194)*	3.17	III	6100	*(27100)*	21.9	1430	*(161)*	3.17	III	6120	*(27200)*	05	**4A100**	80	(a)
16.6	1880	*(213)*	3.17	III	6090	*(27100)*	20.0	1560	*(176)*	3.17	III	6110	*(27200)*	05	**4A100**	88	(a)
14.3	2180	*(247)*	3.03	III	6070	*(27000)*	17.2	1810	*(204)*	3.03	III	6090	*(27100)*	05	**4A100**	102	(a)
12.9	2410	*(272)*	2.44	III	6050	*(26900)*	15.6	2000	*(225)*	2.44	III	6080	*(27100)*	05	**4A100**	112	(a)
			3.00	III	6050	*(26900)*				3.00	III	6080	*(27100)*	05	**4A105**	112	(a)
11.8	2630	*(298)*	2.44	III	6030	*(26800)*	14.3	2180	*(247)*	2.44	III	6070	*(27000)*	05	**4A100**	123	(a)
			3.00	III	6030	*(26800)*				3.00	III	6070	*(27000)*	05	**4A105**	123	(a)
9.63	3240	*(366)*	1.95	II	5970	*(26500)*	11.6	2680	*(303)*	1.95	II	6020	*(26800)*	05	**4A100**	151	(a)
			2.71	III	5970	*(26500)*				2.71	III	6020	*(26800)*	05	**4A105**	151	(a)
8.12	3840	*(434)*	1.40	II	5890	*(26200)*	9.80	3180	*(359)*	1.40	II	5970	*(26600)*	05	**4A100**	179	(a)
			1.94	II	5890	*(26200)*				1.94	II	5970	*(26600)*	05	**4A105**	179	(a)
			2.36	III	5890	*(26200)*				2.36	III	5970	*(26600)*	05	**4A110**	179	(a)
			2.78	III	5890	*(26200)*				2.78	III	5970	*(26600)*	05	**4A115**	179	(a)
			2.98	III	5890	*(26200)*				2.98	III	5970	*(26600)*	05	**4A120**	179	(a)
7.02	4440	*(502)*	1.29	I	5800	*(25800)*	8.47	3680	*(416)*	1.29	I	5910	*(26300)*	05	**4A100**	207	(a)
			1.70	II	5800	*(25800)*				1.77	II	5910	*(26300)*	05	**4A105**	207	(a)
			2.15	III	5800	*(25800)*				2.15	III	5910	*(26300)*	05	**4A110**	207	(a)
			2.53	III	5800	*(25800)*				2.53	III	5910	*(26300)*	05	**4A115**	207	(a)
			2.57	III	5800	*(25800)*				2.57	III	5910	*(26300)*	05	**4A120**	207	(a)
5.84	5340	*(604)*	1.09	I	5630	*(25000)*	7.04	4430	*(500)*	1.09	I	5800	*(25800)*	05	**4A100**	249	(a)
			1.26	I	5630	*(25000)*				1.40	II	5800	*(25800)*	05	**4A105**	249	(a)
			1.67	II	5630	*(25000)*				1.67	II	5800	*(25800)*	05	**4A110**	249	(a)
			1.89	II	5630	*(25000)*				1.89	II	5800	*(25800)*	05	**4A115**	249	(a)
			2.14	III	5630	*(25000)*				2.14	III	5800	*(25800)*	05	**4A120**	249	(a)
			2.39	III	9860	*(43900)*				2.39	III	9920	*(44100)*	05	**4B120**	249	(a)
			2.84	III	9860	*(43900)*				3.00	III	9920	*(44100)*	05	**4B125**	249	(a)
4.76	6550	*(740)*	1.08	I	5350	*(23800)*	5.75	5420	*(613)*	1.08	I	5610	*(25000)*	05	**4A100**	305	(a)
			1.26	I	5350	*(23800)*				1.41	II	5610	*(25000)*	05	**4A105**	305	(a)
			1.65	II	5350	*(23800)*				1.65	II	5610	*(25000)*	05	**4A110**	305	(a)
			1.74	II	5350	*(23800)*				1.74	II	5610	*(25000)*	05	**4A115**	305	(a)
			2.36	III	9760	*(43400)*				2.36	III	9850	*(43800)*	05	**4B120**	305	(a)
			2.57	III	9760	*(43400)*				2.83	III	9850	*(43800)*	05	**4B125**	305	(a)

Notes: [1] For double reduction and 1/8 HP single reduction Y4 ratings, refer to selection tables on pages 2.91 thru 2.130.
[2] Variable Frequency Drive (VFD) notes (see page 2.8 for Constant Torque Speed Ranges):

Y4 Mounting Single Reduction Selection Tables

3/4 HP (0.55 kW)

Y4 Mounting Position[1]:

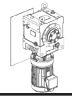

Dimension Pages:

Single Reduction	2.132-2.143
Single Reduction,Y2	2.144
Double Reduction	2.146-2.161
Double Reduction, Y2	2.162

Frequency	50 Hz	60 Hz
Input Speed	1450 RPM	1750 RPM
Number of Poles	4	

50Hz							60 Hz						Selection			
Output Speed (RPM)	Output Torque		Service Factor		Solid Shaft Overhung Load		Output Speed (RPM)	Output Torque		Service Factor[1]		Solid Shaft Overhung Load		Base			VFD[1]
	in•lbs	*(N•m)*	SF	AGMA Class	lbs	*(N)*		in•lbs	*(N•m)*	SF	AGMA Class	lbs	*(N)*	Motor Power Code	Frame Size	Ratio	
18.1	2360	*(267)*	2.31	III	6050	*(26900)*	21.9	1960	*(221)*	2.31	III	6080	*(27100)*	08	**4A100**	80	(a)
			3.04	III	6050	*(26900)*				3.04	III	6080	*(27100)*	08	**4A105**	80	(a)
16.6	2590	*(292)*	2.31	III	6030	*(26800)*	20.0	2140	*(242)*	2.31	III	6070	*(27000)*	08	**4A100**	88	(a)
			3.04	III	6030	*(26800)*				3.04	III	6070	*(27000)*	08	**4A105**	88	(a)
14.3	3000	*(339)*	2.20	III	5990	*(26700)*	17.2	2490	*(281)*	2.20	III	6040	*(26900)*	08	**4A100**	102	(a)
			2.89	III	5990	*(26700)*				2.89	III	6040	*(26900)*	08	**4A105**	102	(a)
12.9	3310	*(374)*	1.77	II	5960	*(26500)*	15.6	2740	*(310)*	1.77	II	6020	*(26800)*	08	**4A100**	112	(a)
			2.18	III	5960	*(26500)*				2.18	III	6020	*(26800)*	08	**4A105**	112	(a)
			2.73	III	5960	*(26500)*				2.73	III	6020	*(26800)*	08	**4A110**	112	(a)
11.8	3620	*(409)*	1.77	II	5920	*(26300)*	14.3	3000	*(339)*	1.77	II	5990	*(26700)*	08	**4A100**	123	(a)
			2.18	III	5920	*(26300)*				2.18	III	5990	*(26700)*	08	**4A105**	123	(a)
			2.73	III	5920	*(26300)*				2.73	III	5990	*(26700)*	08	**4A110**	123	(a)
			3.15	III	5920	*(26300)*				3.15	III	5990	*(26700)*	08	**4A115**	123	(a)
9.63	4450	*(503)*	1.42	II	5800	*(25800)*	11.6	3690	*(416)*	1.42	II	5910	*(26300)*	08	**4A100**	151	(a)
			1.97	II	5800	*(25800)*				1.97	II	5910	*(26300)*	08	**4A105**	151	(a)
			2.36	III	5800	*(25800)*				2.36	III	5910	*(26300)*	08	**4A110**	151	(a)
			2.57	III	5800	*(25800)*				2.57	III	5910	*(26300)*	08	**4A115**	151	(a)
8.12	5280	*(596)*	1.02	I	5640	*(25100)*	9.80	4370	*(494)*	1.02	I	5810	*(25800)*	08	**4A100**	179	(a)
			1.41	II	5640	*(25100)*				1.41	II	5810	*(25800)*	08	**4A105**	179	(a)
			1.72	II	5640	*(25100)*				1.72	II	5810	*(25800)*	08	**4A110**	179	(a)
			2.02	III	5640	*(25100)*				2.02	III	5810	*(25800)*	08	**4A115**	179	(a)
			2.16	III	5640	*(25100)*				2.16	III	5810	*(25800)*	08	**4A120**	179	(a)
			2.96	III	9860	*(43900)*				3.12	III	9920	*(44100)*	08	**4B120**	179	(a)
7.02	6100	*(690)*	0.94	-	5460	*(24300)*	8.47	5060	*(571)*	0.94	-	5690	*(25300)*	08	**4A100**	207	(a)
			1.24	I	5460	*(24300)*				1.29	I	5690	*(25300)*	08	**4A105**	207	(a)
			1.56	II	5460	*(24300)*				1.56	II	5690	*(25300)*	08	**4A110**	207	(a)
			1.84	II	5460	*(24300)*				1.84	II	5690	*(25300)*	08	**4A115**	207	(a)
			1.87	II	5460	*(24300)*				1.87	II	5690	*(25300)*	08	**4A120**	207	(a)
			2.37	III	9800	*(43600)*				2.37	III	9880	*(43900)*	08	**4B120**	207	(a)
			2.95	III	9800	*(43600)*				2.95	III	9880	*(43900)*	08	**4B125**	207	(a)
5.84	7350	*(830)*	0.92	-	5120	*(22800)*	7.04	6090	*(688)*	1.02	I	5470	*(24300)*	08	**4A105**	249	(a)
			1.22	I	5120	*(22800)*				1.22	I	5470	*(24300)*	08	**4A110**	249	(a)
			1.38	I	5120	*(22800)*				1.38	I	5470	*(24300)*	08	**4A115**	249	(a)
			1.55	II	5120	*(22800)*				1.55	II	5470	*(24300)*	08	**4A120**	249	(a)
			1.74	II	9690	*(43100)*				1.74	II	9800	*(43600)*	08	**4B120**	249	(a)
			2.07	III	9690	*(43100)*				2.18	III	9800	*(43600)*	08	**4B125**	249	(a)
			2.75	III	9690	*(43100)*				2.75	III	9800	*(43600)*	08	**4B140**	249	(a)
			3.10	III	9690	*(43100)*				3.10	III	9800	*(43600)*	08	**4B160**	249	(a), (-)

Notes: [1] For double reduction and 1/8 HP single reduction Y4 ratings, refer to selection tables on pages 2.91 thru 2.130.
[2] Variable Frequency Drive (VFD) notes (see page 2.8 for Constant Torque Speed Ranges):

Y4 Mounting Single Reduction Selection Tables

3/4 HP (0.55 kW)

Y4 Mounting Position[1]:

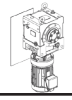

Dimension Pages:

Single Reduction	2.132-2.143
Single Reduction,Y2	2.144
Double Reduction	2.146-2.161
Double Reduction, Y2	2.162

Frequency	50 Hz	60 Hz
Input Speed	1450 RPM	1750 RPM
Number of Poles	4	

50Hz							60 Hz							Selection			
Output Speed (RPM)	Output Torque		Service Factor		Solid Shaft Overhung Load		Output Speed (RPM)	Output Torque		Service Factor[1]		Solid Shaft Overhung Load		Base			VFD[1]
	in•lbs	*(N•m)*	SF	AGMA Class	lbs	*(N)*		in•lbs	*(N•m)*	SF	AGMA Class	lbs	*(N)*	Motor Power Code	Frame Size	Ratio	
4.76	9000	*(1020)*	0.91	-	4520	*(20100)*	5.75	7460	*(843)*	1.03	I	5090	*(22600)*	08	**4A105**	305	(a)
			1.20	I	4520	*(20100)*				1.20	I	5090	*(22600)*	08	**4A110**	305	(a)
			1.27	I	4520	*(20100)*				1.27	I	5090	*(22600)*	08	**4A115**	305	(a)
			1.72	II	9500	*(42300)*				1.72	II	9680	*(43000)*	08	**4B120**	305	(a)
			1.87	II	9500	*(42300)*				2.05	III	9680	*(43000)*	08	**4B125**	305	(a)
			2.53	III	9500	*(42300)*				2.53	III	9680	*(43000)*	08	**4B140**	305	(a)

Sold & Serviced By:
ELECTROMATE
Toll Free Phone (877) SERV098
www.electromate.com
sales@electromate.com

Notes: [1] For double reduction and 1/8 HP single reduction Y4 ratings, refer to selection tables on pages 2.91 thru 2.130.
[2] Variable Frequency Drive (VFD) notes (see page 2.8 for Constant Torque Speed Ranges):

Y4 Mounting Single Reduction Selection Tables

1 HP (0.75 kW)

Y4 Mounting Position[1]:

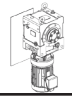

Dimension Pages:

Single Reduction	2.132-2.143
Single Reduction,Y2	2.144
Double Reduction	2.146-2.161
Double Reduction, Y2	2.162

Frequency	50 Hz	60 Hz
Input Speed	1450 RPM	1750 RPM
Number of Poles	4	

50Hz							60 Hz							Selection			
Output Speed (RPM)	Output Torque		Service Factor		Solid Shaft Overhung Load		Output Speed (RPM)	Output Torque		Service Factor[1]		Solid Shaft Overhung Load		Base			VFD[1]
	in•lbs	*(N•m)*	SF	AGMA Class	lbs	*(N)*		in•lbs	*(N•m)*	SF	AGMA Class	lbs	*(N)*	Motor Power Code	Frame Size	Ratio	
69.0	847	*(96)*	3.13	III	4930	*(21900)*	83.3	701	*(79)*	3.13	III	4670	*(20800)*	1	**4A100**	21	
51.8	1130	*(128)*	3.13	III	5340	*(23800)*	62.5	935	*(106)*	3.13	III	5070	*(22500)*	1	**4A100**	28	
41.2	1420	*(160)*	3.13	III	5690	*(25300)*	49.7	1180	*(133)*	3.13	III	5400	*(24000)*	1	**4A100**	35	
37.7	1550	*(175)*	3.13	III	5830	*(26000)*	45.5	1290	*(145)*	3.13	III	5540	*(24600)*	1	**4A100**	39	
31.9	1830	*(207)*	3.13	III	6090	*(27100)*	38.5	1520	*(172)*	3.13	III	5800	*(25800)*	1	**4A100**	46	
27.6	2120	*(239)*	3.13	III	6070	*(27000)*	33.3	1750	*(198)*	3.13	III	6030	*(26800)*	1	**4A100**	53	
24.4	2400	*(271)*	2.65	III	6050	*(26900)*	29.4	1990	*(225)*	2.65	III	6080	*(27100)*	1	**4A100**	60	
21.6	2710	*(306)*	2.54	III	6020	*(26800)*	26.0	2240	*(254)*	2.57	III	6060	*(27000)*	1	**4A100**	67	
			3.04	III	6020	*(26800)*				3.11	III	6060	*(27000)*	1	**4A105**	67	
19.7	2960	*(335)*	2.54	III	6000	*(26700)*	23.8	2450	*(277)*	2.57	III	6050	*(26900)*	1	**4A100**	74	
			3.04	III	6000	*(26700)*				3.11	III	6050	*(26900)*	1	**4A105**	74	
18.1	3220	*(364)*	1.69	II	5970	*(26500)*	21.9	2670	*(302)*	1.69	II	6030	*(26800)*	1	**4A100**	80	
			2.23	III	5970	*(26500)*				2.23	III	6030	*(26800)*	1	**4A105**	80	
			2.55	III	5970	*(26500)*				2.55	III	6030	*(26800)*	1	**4A110**	80	
			2.96	III	5970	*(26500)*				2.96	III	6030	*(26800)*	1	**4A115**	80	
16.6	3530	*(399)*	1.69	II	5930	*(26400)*	20.0	2920	*(330)*	1.69	II	6000	*(26700)*	1	**4A100**	88	
			2.23	III	5930	*(26400)*				2.23	III	6000	*(26700)*	1	**4A105**	88	
			2.55	III	5930	*(26400)*				2.55	III	6000	*(26700)*	1	**4A110**	88	
			2.96	III	5930	*(26400)*				2.96	III	6000	*(26700)*	1	**4A115**	88	
14.3	4090	*(462)*	1.61	II	5850	*(26000)*	17.2	3390	*(383)*	1.61	II	5950	*(26500)*	1	**4A100**	102	
			2.12	III	5850	*(26000)*				2.12	III	5950	*(26500)*	1	**4A105**	102	
			2.54	III	5850	*(26000)*				2.54	III	5950	*(26500)*	1	**4A110**	102	
			2.79	III	5850	*(26000)*				2.79	III	5950	*(26500)*	1	**4A115**	102	
12.9	4510	*(510)*	1.30	I	5780	*(25700)*	15.6	3740	*(423)*	1.30	I	5900	*(26300)*	1	**4A100**	112	
			1.60	II	5780	*(25700)*				1.60	II	5900	*(26300)*	1	**4A105**	112	
			2.00	III	5780	*(25700)*				2.00	III	5900	*(26300)*	1	**4A110**	112	
			2.41	III	5780	*(25700)*				2.41	III	5900	*(26300)*	1	**4A115**	112	
			2.53	III	5780	*(25700)*				2.53	III	5900	*(26300)*	1	**4A120**	112	
			3.17	III	9910	*(44100)*				3.33	III	9960	*(44300)*	1	**4B120**	112	
11.8	4940	*(558)*	1.30	I	5710	*(25400)*	14.3	4090	*(462)*	1.30	I	5850	*(26000)*	1	**4A100**	123	
			1.60	II	5710	*(25400)*				1.60	II	5850	*(26000)*	1	**4A105**	123	
			2.00	III	5710	*(25400)*				2.00	III	5850	*(26000)*	1	**4A110**	123	
			2.31	III	5710	*(25400)*				2.31	III	5850	*(26000)*	1	**4A115**	123	
			3.17	III	9890	*(44000)*				3.33	III	9940	*(44200)*	1	**4B120**	123	

Notes: [1] For double reduction and 1/8 HP single reduction Y4 ratings, refer to selection tables on pages 2.91 thru 2.130.
[2] Variable Frequency Drive (VFD) notes (see page 2.8 for Constant Torque Speed Ranges):

Y4 Mounting Single Reduction Selection Tables

1 HP (0.75 kW)

Y4 Mounting Position[1]:

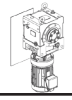

Dimension Pages:

Single Reduction	2.132-2.143
Single Reduction,Y2	2.144
Double Reduction	2.146-2.161
Double Reduction, Y2	2.162

Frequency	50 Hz	60 Hz
Input Speed	1450 RPM	1750 RPM
Number of Poles	4	

50Hz							60 Hz							Selection			
Output Speed (RPM)	Output Torque		Service Factor		Solid Shaft Overhung Load		Output Speed (RPM)	Output Torque		Service Factor[1]		Solid Shaft Overhung Load		Base			VFD[1]
	in•lbs	(N•m)	SF	AGMA Class	lbs	(N)		in•lbs	(N•m)	SF	AGMA Class	lbs	(N)	Motor Power Code	Frame Size	Ratio	
9.63	6070	(685)	1.04	I	5470	(24300)	11.6	5030	(568)	1.04	I	5690	(25300)	1	**4A100**	151	
			1.45	II	5470	(24300)				1.45	II	5690	(25300)	1	**4A105**	151	
			1.73	II	5470	(24300)				1.73	II	5690	(25300)	1	**4A110**	151	
			1.88	II	5470	(24300)				1.88	II	5690	(25300)	1	**4A115**	151	
			2.55	III	9800	(43600)				2.55	III	9880	(44000)	1	**4B120**	151	
			3.12	III	9800	(43600)				3.17	III	9880	(44000)	1	**4B125**	151	
8.12	7200	(813)	1.03	I	5170	(23000)	9.80	5960	(674)	1.03	I	5490	(24400)	1	**4A105**	179	
			1.26	I	5170	(23000)				1.26	I	5490	(24400)	1	**4A110**	179	
			1.48	II	5170	(23000)				1.48	II	5490	(24400)	1	**4A115**	179	
			1.59	II	5170	(23000)				1.59	II	5490	(24400)	1	**4A120**	179	
			2.17	III	9700	(43200)				2.29	III	9810	(43600)	1	**4B120**	179	
			2.63	III	9700	(43200)				3.04	III	9810	(43600)	1	**4B125**	179	
			3.16	III	9700	(43200)				3.16	III	9810	(43600)	1	**4B160**	179	(-)
7.02	8320	(940)	0.91	-	4790	(21300)	8.47	6900	(779)	0.94	-	5250	(23400)	1	**4A105**	207	
			1.15	I	4790	(21300)				1.15	I	5250	(23400)	1	**4A110**	207	
			1.35	I	4790	(21300)				1.35	I	5250	(23400)	1	**4A115**	207	
			1.37	I	4790	(21300)				1.37	I	5250	(23400)	1	**4A120**	207	
			1.74	II	9580	(42600)				1.74	II	9730	(43300)	1	**4B120**	207	
			2.16	III	9580	(42600)				2.16	III	9730	(43300)	1	**4B125**	207	
			2.73	III	9580	(42600)				2.73	III	9730	(43300)	1	**4B140**	207	
5.84	10000	(1130)	1.01	I	4030	(17900)	7.04	8300	(938)	1.01	I	4800	(21300)	1	**4A115**	249	
			1.14	I	4030	(17900)				1.14	I	4800	(21300)	1	**4A120**	249	
			1.28	I	9370	(41700)				1.28	I	9590	(42600)	1	**4B120**	249	
			1.52	II	9370	(41700)				1.60	II	9590	(42600)	1	**4B125**	249	
			2.02	III	9370	(41700)				2.02	III	9590	(42600)	1	**4B140**	249	
			2.27	III	9370	(41700)				2.27	III	9590	(42600)	1	**4B160**	249	
4.76	12300	(1390)	0.93	-	2330	(10300)	5.75	10200	(1150)	0.93	-	3950	(17600)	1	**4A115**	305	
			1.26	I	9000	(40100)				1.26	I	9340	(41600)	1	**4B120**	305	
			1.37	I	9000	(40100)				1.51	II	9340	(41600)	1	**4B125**	305	
			1.85	II	9000	(40100)				1.85	II	9340	(41600)	1	**4B140**	305	
			2.02	III	15700	(70100)				2.02	III	15900	(70600)	1	**4C140**	305	

Sold & Serviced By:
ELECTROMATE
Toll Free Phone (877) SERVO98
www.electromate.com
sales@electromate.com

Notes: [1] For double reduction and 1/8 HP single reduction Y4 ratings, refer to selection tables on pages 2.91 thru 2.130.
[2] Variable Frequency Drive (VFD) notes (see page 2.8 for Constant Torque Speed Ranges):

Y4 Mounting Single Reduction Selection Tables

1.5 HP (1.1 kW)

Y4 Mounting Position[1]:

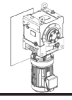

Dimension Pages:

Single Reduction	2.132-2.143
Single Reduction,Y2	2.144
Double Reduction	2.146-2.161
Double Reduction, Y2	2.162

Frequency	50 Hz	60 Hz
Input Speed	1450 RPM	1750 RPM
Number of Poles	4	

50Hz							60 Hz							Selection			
Output Speed (RPM)	Output Torque		Service Factor		Solid Shaft Overhung Load		Output Speed (RPM)	Output Torque		Service Factor[1]		Solid Shaft Overhung Load		Base			VFD[1]
	in•lbs	*(N•m)*	SF	AGMA Class	lbs	*(N)*		in•lbs	*(N•m)*	SF	AGMA Class	lbs	*(N)*	Motor Power Code	Frame Size	Ratio	
69.0	1240	*(140)*	2.13	III	4870	*(21700)*	83.3	1030	*(116)*	2.13	III	4620	*(20600)*	1H	**4A100**	21	
			2.89	III	4870	*(21700)*				2.89	III	4620	*(20600)*	1H	**4A105**	21	
51.8	1660	*(187)*	2.13	III	5270	*(23400)*	62.5	1370	*(155)*	2.13	III	5010	*(22300)*	1H	**4A100**	28	
			2.89	III	5270	*(23400)*				2.89	III	5010	*(22300)*	1H	**4A105**	28	
41.2	2080	*(235)*	2.13	III	5600	*(24900)*	49.7	1720	*(195)*	2.13	III	5330	*(23700)*	1H	**4A100**	35	
			2.89	III	5600	*(24900)*				2.89	III	5330	*(23700)*	1H	**4A105**	35	
37.7	2280	*(257)*	2.13	III	5740	*(25500)*	45.5	1890	*(213)*	2.13	III	5460	*(24300)*	1H	**4A100**	39	
			2.89	III	5740	*(25500)*				2.89	III	5460	*(24300)*	1H	**4A105**	39	
31.9	2690	*(304)*	2.13	III	5990	*(26600)*	38.5	2230	*(252)*	2.13	III	5700	*(25400)*	1H	**4A100**	46	
			2.89	III	5990	*(26600)*				2.89	III	5700	*(25400)*	1H	**4A105**	46	
27.6	3100	*(351)*	2.13	III	5980	*(26600)*	33.3	2570	*(291)*	2.13	III	5920	*(26300)*	1H	**4A100**	53	
			2.89	III	5980	*(26600)*				2.89	III	5920	*(26300)*	1H	**4A105**	53	
24.4	3520	*(397)*	1.81	II	5930	*(26400)*	29.4	2910	*(329)*	1.81	II	6000	*(26700)*	1H	**4A100**	60	
			2.23	III	5930	*(26400)*				2.23	III	6000	*(26700)*	1H	**4A105**	60	
			2.89	III	5930	*(26400)*				2.89	III	6000	*(26700)*	1H	**4A110**	60	
21.6	3970	*(449)*	1.73	II	5870	*(26100)*	26.0	3290	*(372)*	1.75	II	5960	*(26500)*	1H	**4A100**	67	
			2.08	III	5870	*(26100)*				2.12	III	5960	*(26500)*	1H	**4A105**	67	
			2.48	III	5870	*(26100)*				2.48	III	5960	*(26500)*	1H	**4A110**	67	
			2.83	III	5870	*(26100)*				2.83	III	5960	*(26500)*	1H	**4A115**	67	
			2.87	III	5870	*(26100)*				2.87	III	5960	*(26500)*	1H	**4A120**	67	
19.7	4350	*(491)*	1.73	II	5810	*(25900)*	23.8	3600	*(407)*	1.75	II	5920	*(26300)*	1H	**4A100**	74	
			2.08	III	5810	*(25900)*				2.12	III	5920	*(26300)*	1H	**4A105**	74	
			2.48	III	5810	*(25900)*				2.48	III	5920	*(26300)*	1H	**4A110**	74	
			2.63	III	5810	*(25900)*				2.63	III	5920	*(26300)*	1H	**4A115**	74	
18.1	4730	*(534)*	1.15	I	5750	*(25600)*	21.9	3920	*(443)*	1.15	I	5880	*(26100)*	1H	**4A100**	80	
			1.52	II	5750	*(25600)*				1.52	II	5880	*(26100)*	1H	**4A105**	80	
			1.74	II	5750	*(25600)*				1.74	II	5880	*(26100)*	1H	**4A110**	80	
			2.02	III	5750	*(25600)*				2.02	III	5880	*(26100)*	1H	**4A115**	80	
			2.41	III	5750	*(25600)*				2.41	III	5880	*(26100)*	1H	**4A120**	80	
			2.81	III	9650	*(42900)*				2.81	III	9180	*(40800)*	1H	**4B120**	80	
16.6	5170	*(584)*	1.15	I	5660	*(25200)*	20.0	4290	*(484)*	1.15	I	5820	*(25900)*	1H	**4A100**	88	
			1.52	II	5660	*(25200)*				1.52	II	5820	*(25900)*	1H	**4A105**	88	
			1.74	II	5660	*(25200)*				1.74	II	5820	*(25900)*	1H	**4A110**	88	
			2.02	III	5660	*(25200)*				2.02	III	5820	*(25900)*	1H	**4A115**	88	
			2.21	III	5660	*(25200)*				2.21	III	5820	*(25900)*	1H	**4A120**	88	
			2.81	III	9870	*(43900)*				2.81	III	9400	*(41800)*	1H	**4B120**	88	

Notes: [1] For double reduction and 1/8 HP single reduction Y4 ratings, refer to selection tables on pages 2.91 thru 2.130.
[2] Variable Frequency Drive (VFD) notes (see page 2.8 for Constant Torque Speed Ranges):

Y4 Mounting Single Reduction Selection Tables

1.5 HP (1.1 kW)

Y4 Mounting Position[1]:

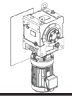

Dimension Pages:

Single Reduction	2.132-2.143
Single Reduction,Y2	2.144
Double Reduction	2.146-2.161
Double Reduction, Y2	2.162

Frequency	50 Hz	60 Hz
Input Speed	1450 RPM	1750 RPM
Number of Poles	4	

50Hz							60 Hz							Selection			
Output Speed (RPM)	Output Torque		Service Factor		Solid Shaft Overhung Load		Output Speed (RPM)	Output Torque		Service Factor[1]		Solid Shaft Overhung Load		Base			VFD[1]
	in•lbs	*(N•m)*	SF	AGMA Class	lbs	*(N)*		in•lbs	*(N•m)*	SF	AGMA Class	lbs	*(N)*	Motor Power Code	Frame Size	Ratio	
14.3	6000	*(678)*	1.10	I	5490	*(24400)*	17.2	4970	*(562)*	1.10	I	5700	*(25400)*	1H	**4A100**	102	
			1.45	II	5490	*(24400)*				1.45	II	5700	*(25400)*	1H	**4A105**	102	
			1.73	II	5490	*(24400)*				1.73	II	5700	*(25400)*	1H	**4A110**	102	
			1.90	II	5490	*(24400)*				1.90	II	5700	*(25400)*	1H	**4A115**	102	
			2.61	III	9810	*(43600)*				2.72	III	9770	*(43500)*	1H	**4B120**	102	
			3.16	III	9810	*(43600)*				3.42	III	9770	*(43500)*	1H	**4B125**	102	
12.9	6620	*(748)*	0.89	-	5330	*(23700)*	15.6	5490	*(620)*	0.89	-	5600	*(24900)*	1H	**4A100**	112	
			1.09	I	5330	*(23700)*				1.09	I	5600	*(24900)*	1H	**4A105**	112	
			1.37	I	5330	*(23700)*				1.37	I	5600	*(24900)*	1H	**4A110**	112	
			1.64	II	5330	*(23700)*				1.64	II	5600	*(24900)*	1H	**4A115**	112	
			1.72	II	5330	*(23700)*				1.72	II	5600	*(24900)*	1H	**4A120**	112	
			2.16	III	9760	*(43400)*				2.27	III	9850	*(43800)*	1H	**4B120**	112	
			2.61	III	9760	*(43400)*				2.89	III	9850	*(43800)*	1H	**4B125**	112	
11.8	7240	*(818)*	0.89	-	5150	*(22900)*	14.3	6000	*(678)*	0.89	-	5490	*(24400)*	1H	**4A100**	123	
			1.09	I	5150	*(22900)*				1.09	I	5490	*(24400)*	1H	**4A105**	123	
			1.37	I	5150	*(22900)*				1.37	I	5490	*(24400)*	1H	**4A110**	123	
			1.58	II	5150	*(22900)*				1.58	II	5490	*(24400)*	1H	**4A115**	123	
			2.16	III	9700	*(43100)*				2.27	III	9810	*(43600)*	1H	**4B120**	123	
			2.61	III	9700	*(43100)*				2.89	III	9810	*(43600)*	1H	**4B125**	123	
			3.14	III	9700	*(43100)*				3.14	III	9810	*(43600)*	1H	**4B140**	123	
9.63	8900	*(1010)*	0.99	-	4560	*(20300)*	11.6	7370	*(833)*	0.99	-	5110	*(22700)*	1H	**4A105**	151	
			1.18	I	4560	*(20300)*				1.18	I	5110	*(22700)*	1H	**4A110**	151	
			1.28	I	4560	*(20300)*				1.28	I	5110	*(22700)*	1H	**4A115**	151	
			1.74	II	9510	*(42300)*				1.74	II	9680	*(43100)*	1H	**4B120**	151	
			2.13	III	9510	*(42300)*				2.16	III	9680	*(43100)*	1H	**4B125**	151	
			2.56	III	9510	*(42300)*				2.56	III	9680	*(43100)*	1H	**4B160**	151	
8.12	10600	*(1190)*	0.86	-	3720	*(16600)*	9.80	8740	*(988)*	0.86	-	4620	*(20600)*	1H	**4A110**	179	
			1.01	I	3720	*(16600)*				1.01	I	4620	*(20600)*	1H	**4A115**	179	
			1.08	I	3720	*(16600)*				1.08	I	4620	*(20600)*	1H	**4A120**	179	
			1.48	II	9290	*(41300)*				1.56	II	9530	*(42400)*	1H	**4B120**	179	
			1.79	II	9290	*(41300)*				2.07	III	9530	*(42400)*	1H	**4B125**	179	
			2.16	III	9290	*(41300)*				2.16	III	9530	*(42400)*	1H	**4B160**	179	

Notes: [1] For double reduction and 1/8 HP single reduction Y4 ratings, refer to selection tables on pages 2.91 thru 2.130.
[2] Variable Frequency Drive (VFD) notes (see page 2.8 for Constant Torque Speed Ranges):

Y4 Mounting Single Reduction Selection Tables

1.5 HP (1.1 kW)

Y4 Mounting Position[1]:

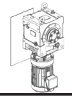

Dimension Pages:

Single Reduction	2.132-2.143
Single Reduction,Y2	2.144
Double Reduction	2.146-2.161
Double Reduction, Y2	2.162

Frequency	50 Hz	60 Hz
Input Speed	1450 RPM	1750 RPM
Number of Poles	4	

50Hz							60 Hz							Selection			
Output Speed (RPM)	Output Torque		Service Factor		Solid Shaft Overhung Load		Output Speed (RPM)	Output Torque		Service Factor[1]		Solid Shaft Overhung Load		Base			VFD[1]
	in•lbs	*(N•m)*	SF	AGMA Class	lbs	*(N)*		in•lbs	*(N•m)*	SF	AGMA Class	lbs	*(N)*	Motor Power Code	Frame Size	Ratio	
7.02	12200	*(1380)*	0.78	-	2400	*(10700)*	8.47	10100	*(1140)*	0.78	-	3980	*(17700)*	1H	**4A110**	207	
			0.92	-	2400	*(10700)*				0.92	-	3980	*(17700)*	1H	**4A115**	207	
			0.94	-	2400	*(10700)*				0.94	-	3980	*(17700)*	1H	**4A120**	207	
			1.19	I	9020	*(40100)*				1.19	I	9350	*(41600)*	1H	**4B120**	207	
			1.47	II	9020	*(40100)*				1.47	II	9350	*(41600)*	1H	**4B125**	207	
			1.86	II	9020	*(40100)*				1.86	II	9350	*(41600)*	1H	**4B140**	207	
			2.02	III	15800	*(70100)*				2.02	III	15900	*(70600)*	1H	**4C140**	207	
5.84	14700	*(1660)*	1.03	I	8510	*(37900)*	7.04	12200	*(1380)*	1.09	I	9020	*(40100)*	1H	**4B125**	249	
			1.38	I	8510	*(37900)*				1.38	I	9020	*(40100)*	1H	**4B140**	249	
			1.55	II	8510	*(37900)*				1.55	II	9020	*(40100)*	1H	**4B160**	249	
			2.02	III	15600	*(69300)*				2.02	III	15800	*(70100)*	1H	**4C160**	249	
			2.02	III	21800	*(97000)*				2.02	III	21900	*(97500)*	1H	**4D160**	249	
4.76	18000	*(2030)*	0.93	-	7630	*(33900)*	5.75	14900	*(1690)*	1.03	I	8460	*(37600)*	1H	**4B125**	305	
			1.26	I	7630	*(33900)*				1.26	I	8460	*(37600)*	1H	**4B140**	305	
			1.38	I	15300	*(68000)*				1.38	I	15600	*(69200)*	1H	**4C140**	305	
			2.02	III	15300	*(68000)*				2.02	III	15600	*(69200)*	1H	**4C160**	305	
			2.02	III	21700	*(96400)*				2.02	III	21800	*(97000)*	1H	**4D160**	305	

Sold & Serviced By:
ELECTROMATE
Toll Free Phone (877) SERV098
www.electromate.com
sales@electromate.com

Notes: [1] For double reduction and 1/8 HP single reduction Y4 ratings, refer to selection tables on pages 2.91 thru 2.130.
[2] Variable Frequency Drive (VFD) notes (see page 2.8 for Constant Torque Speed Ranges):

Y4 Mounting Single Reduction Selection Tables

2 HP (1.5 kW)

Y4 Mounting Position[1]:

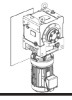

Dimension Pages:

Single Reduction	2.132-2.143
Single Reduction,Y2	2.144
Double Reduction	2.146-2.161
Double Reduction, Y2	2.162

Frequency	50 Hz	60 Hz
Input Speed	1450 RPM	1750 RPM
Number of Poles	4	

50Hz							60 Hz							Selection			
Output Speed (RPM)	Output Torque		Service Factor		Solid Shaft Overhung Load		Output Speed (RPM)	Output Torque		Service Factor[1]		Solid Shaft Overhung Load		Base			VFD[1]
	in•lbs	*(N•m)*	SF	AGMA Class	lbs	*(N)*		in•lbs	*(N•m)*	SF	AGMA Class	lbs	*(N)*	Motor Power Code	Frame Size	Ratio	
69.0	1690	*(191)*	1.56	II	4810	*(21400)*	83.3	1400	*(158)*	1.56	II	4570	*(20300)*	2	**4A100**	21	
			2.12	III	4810	*(21400)*				2.12	III	4570	*(20300)*	2	**4A105**	21	
			2.37	III	4810	*(21400)*				2.37	III	4570	*(20300)*	2	**4A110**	21	
			2.61	III	4810	*(21400)*				2.61	III	4570	*(20300)*	2	**4A115**	21	
51.8	2260	*(255)*	1.56	II	5190	*(23100)*	62.5	1870	*(211)*	1.56	II	4940	*(22000)*	2	**4A100**	28	
			2.12	III	5190	*(23100)*				2.12	III	4940	*(22000)*	2	**4A105**	28	
			2.37	III	5190	*(23100)*				2.37	III	4940	*(22000)*	2	**4A110**	28	
			2.61	III	5190	*(23100)*				2.61	III	4940	*(22000)*	2	**4A115**	28	
41.2	2840	*(321)*	1.56	II	5500	*(24500)*	49.7	2350	*(266)*	1.56	II	5240	*(23300)*	2	**4A100**	35	
			2.12	III	5500	*(24500)*				2.12	III	5240	*(23300)*	2	**4A105**	35	
			2.37	III	5500	*(24500)*				2.37	III	5240	*(23300)*	2	**4A110**	35	
			2.61	III	5500	*(24500)*				2.61	III	5240	*(23300)*	2	**4A115**	35	
37.7	3100	*(351)*	1.56	II	5620	*(25000)*	45.5	2570	*(291)*	1.56	II	5360	*(23900)*	2	**4A100**	39	
			2.12	III	5620	*(25000)*				2.12	III	5360	*(23900)*	2	**4A105**	39	
			2.37	III	5620	*(25000)*				2.37	III	5360	*(23900)*	2	**4A110**	39	
			2.61	III	5620	*(25000)*				2.61	III	5360	*(23900)*	2	**4A115**	39	
31.9	3670	*(414)*	1.56	II	5860	*(26000)*	38.5	3040	*(343)*	1.56	II	5590	*(24900)*	2	**4A100**	46	
			2.12	III	5860	*(26000)*				2.12	III	5590	*(24900)*	2	**4A105**	46	
			2.37	III	5860	*(26000)*				2.37	III	5590	*(24900)*	2	**4A110**	46	
			2.60	III	5860	*(26000)*				2.60	III	5590	*(24900)*	2	**4A115**	46	
			3.11	III	5860	*(26000)*				3.11	III	5590	*(24900)*	2	**4A120**	46	
27.6	4230	*(478)*	1.56	II	5830	*(25900)*	33.3	3510	*(396)*	1.56	II	5790	*(25800)*	2	**4A100**	53	
			2.12	III	5830	*(25900)*				2.12	III	5790	*(25800)*	2	**4A105**	53	
			2.37	III	5830	*(25900)*				2.37	III	5790	*(25800)*	2	**4A110**	53	
			2.60	III	5830	*(25900)*				2.60	III	5790	*(25800)*	2	**4A115**	53	
			2.70	III	5830	*(25900)*				2.70	III	5790	*(25800)*	2	**4A120**	53	
24.4	4800	*(542)*	1.32	I	5740	*(25500)*	29.4	3970	*(449)*	1.32	I	5870	*(26100)*	2	**4A100**	60	
			1.64	II	5740	*(25500)*				1.64	II	5870	*(26100)*	2	**4A105**	60	
			2.12	III	5740	*(25500)*				2.12	III	5870	*(26100)*	2	**4A110**	60	
			2.38	III	5740	*(25500)*				2.38	III	5870	*(26100)*	2	**4A115**	60	
21.6	5420	*(612)*	1.27	I	5610	*(25000)*	26.0	4490	*(507)*	1.28	I	5790	*(25700)*	2	**4A100**	67	
			1.52	II	5610	*(25000)*				1.56	II	5790	*(25700)*	2	**4A105**	67	
			1.82	II	5610	*(25000)*				1.82	II	5790	*(25700)*	2	**4A110**	67	
			2.07	III	5610	*(25000)*				2.07	III	5790	*(25700)*	2	**4A115**	67	
			2.11	III	5610	*(25000)*				2.11	III	5790	*(25700)*	2	**4A120**	67	
			2.64	III	9050	*(40300)*				2.64	III	8630	*(38400)*	2	**4B120**	67	
			3.20	III	9050	*(40300)*				3.26	III	8630	*(38400)*	2	**4B125**	67	

Notes: [1] For double reduction and 1/8 HP single reduction Y4 ratings, refer to selection tables on pages 2.91 thru 2.130.
[2] Variable Frequency Drive (VFD) notes (see page 2.8 for Constant Torque Speed Ranges):

Y4 Mounting Single Reduction Selection Tables

2 HP (1.5 kW)

Y4 Mounting Position[1]:

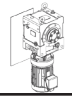

Dimension Pages:

Single Reduction	2.132-2.143
Single Reduction,Y2	2.144
Double Reduction	2.146-2.161
Double Reduction, Y2	2.162

Frequency	50 Hz	60 Hz
Input Speed	1450 RPM	1750 RPM
Number of Poles	4	

50Hz							60 Hz							Selection			
Output Speed (RPM)	Output Torque		Service Factor		Solid Shaft Overhung Load		Output Speed (RPM)	Output Torque		Service Factor[1]		Solid Shaft Overhung Load		Base			VFD[1]
	in•lbs	*(N•m)*	SF	AGMA Class	lbs	*(N)*		in•lbs	*(N•m)*	SF	AGMA Class	lbs	*(N)*	Motor Power Code	Frame Size	Ratio	
19.7	5930	*(669)*	1.27	I	5500	*(24500)*	23.8	4910	*(555)*	1.28	I	5710	*(25400)*	2	**4A100**	74	
			1.52	II	5500	*(24500)*				1.56	II	5710	*(25400)*	2	**4A105**	74	
			1.82	II	5500	*(24500)*				1.82	II	5710	*(25400)*	2	**4A110**	74	
			1.93	II	5500	*(24500)*				1.93	II	5710	*(25400)*	2	**4A115**	74	
			2.64	III	9260	*(41200)*				2.64	III	8830	*(39300)*	2	**4B120**	74	
			3.20	III	9260	*(41200)*				3.26	III	8830	*(39300)*	2	**4B125**	74	
18.1	6450	*(729)*	0.85	-	5370	*(23900)*	21.9	5340	*(604)*	0.85	-	5630	*(25000)*	2	**4A100**	80	
			1.12	I	5370	*(23900)*				1.12	I	5630	*(25000)*	2	**4A105**	80	
			1.28	I	5370	*(23900)*				1.28	I	5630	*(25000)*	2	**4A110**	80	
			1.48	II	5370	*(23900)*				1.48	II	5630	*(25000)*	2	**4A115**	80	
			1.77	II	5370	*(23900)*				1.77	II	5630	*(25000)*	2	**4A120**	80	
			2.06	III	9460	*(42100)*				2.06	III	9020	*(40100)*	2	**4B120**	80	
			2.64	III	9460	*(42100)*				2.64	III	9020	*(40100)*	2	**4B125**	80	
16.6	7050	*(797)*	0.85	-	5210	*(23200)*	20.0	5840	*(660)*	0.85	-	5520	*(24600)*	2	**4A100**	88	
			1.12	I	5210	*(23200)*				1.12	I	5520	*(24600)*	2	**4A105**	88	
			1.28	I	5210	*(23200)*				1.28	I	5520	*(24600)*	2	**4A110**	88	
			1.48	II	5210	*(23200)*				1.48	II	5520	*(24600)*	2	**4A115**	88	
			1.62	II	5210	*(23200)*				1.62	II	5520	*(24600)*	2	**4A120**	88	
			2.06	III	9670	*(43000)*				2.06	III	9230	*(41100)*	2	**4B120**	88	
			2.64	III	9670	*(43000)*				2.64	III	9230	*(41100)*	2	**4B125**	88	
14.3	8180	*(925)*	0.81	-	4840	*(21500)*	17.2	6780	*(766)*	0.81	-	5290	*(23500)*	2	**4A100**	102	
			1.06	I	4840	*(21500)*				1.06	I	5290	*(23500)*	2	**4A105**	102	
			1.27	I	4840	*(21500)*				1.27	I	5290	*(23500)*	2	**4A110**	102	
			1.40	II	4840	*(21500)*				1.40	II	5290	*(23500)*	2	**4A115**	102	
			1.91	II	9600	*(42700)*				2.00	III	9580	*(42600)*	2	**4B120**	102	
			2.31	III	9600	*(42700)*				2.51	III	9580	*(42600)*	2	**4B125**	102	
			2.78	III	9600	*(42700)*				2.78	III	9580	*(42600)*	2	**4B160**	102	
12.9	9030	*(1020)*	0.80	-	4500	*(20000)*	15.6	7480	*(845)*	0.80	-	5080	*(22600)*	2	**4A105**	112	
			1.00	I	4500	*(20000)*				1.00	I	5080	*(22600)*	2	**4A110**	112	
			1.21	I	4500	*(20000)*				1.21	I	5080	*(22600)*	2	**4A115**	112	
			1.26	I	4500	*(20000)*				1.26	I	5080	*(22600)*	2	**4A120**	112	
			1.58	II	9500	*(42200)*				1.66	II	9670	*(43000)*	2	**4B120**	112	
			1.92	II	9500	*(42200)*				2.12	III	9670	*(43000)*	2	**4B125**	112	
			2.49	III	9500	*(42200)*				2.49	III	9670	*(43000)*	2	**4B140**	112	
			2.52	III	9500	*(42200)*				2.52	III	9670	*(43000)*	2	**4B160**	112	

Notes: [1] For double reduction and 1/8 HP single reduction Y4 ratings, refer to selection tables on pages 2.91 thru 2.130.
[2] Variable Frequency Drive (VFD) notes (see page 2.8 for Constant Torque Speed Ranges):

Y4 Mounting Single Reduction Selection Tables

2 HP (1.5 kW)

Y4 Mounting Position[1]:

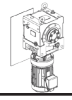

Dimension Pages:

Single Reduction	2.132-2.143
Single Reduction,Y2	2.144
Double Reduction	2.146-2.161
Double Reduction, Y2	2.162

Frequency	50 Hz	60 Hz
Input Speed	1450 RPM	1750 RPM
Number of Poles	4	

50Hz							60 Hz							Selection			
Output Speed (RPM)	Output Torque		Service Factor		Solid Shaft Overhung Load		Output Speed (RPM)	Output Torque		Service Factor[1]		Solid Shaft Overhung Load		Base			VFD[1]
	in•lbs	*(N•m)*	SF	AGMA Class	lbs	*(N)*		in•lbs	*(N•m)*	SF	AGMA Class	lbs	*(N)*	Motor Power Code	Frame Size	Ratio	
11.8	9880	*(1120)*	0.80	-	4100	*(18300)*	14.3	8180	*(925)*	0.80	-	4840	*(21500)*	2	**4A105**	123	
			1.00	I	4100	*(18300)*				1.00	I	4840	*(21500)*	2	**4A110**	123	
			1.16	I	4100	*(18300)*				1.16	I	4840	*(21500)*	2	**4A115**	123	
			1.58	II	9390	*(41800)*				1.66	II	9600	*(42700)*	2	**4B120**	123	
			1.92	II	9390	*(41800)*				2.12	III	9600	*(42700)*	2	**4B125**	123	
			2.30	III	9390	*(41800)*				2.30	III	9600	*(42700)*	2	**4B140**	123	
			2.49	III	14900	*(66400)*				2.49	III	14200	*(63200)*	2	**4C140**	123	
9.63	12100	*(1370)*	0.87	-	2480	*(11000)*	11.6	10100	*(1140)*	0.87	-	4010	*(17800)*	2	**4A110**	151	
			0.94	-	2480	*(11000)*				0.94	-	4010	*(17800)*	2	**4A115**	151	
			1.28	I	9030	*(40200)*				1.28	I	9360	*(41600)*	2	**4B120**	151	
			1.56	II	9030	*(40200)*				1.59	II	9360	*(41600)*	2	**4B125**	151	
			1.87	II	9030	*(40200)*				1.87	II	9360	*(41600)*	2	**4B160**	151	
			2.49	III	15700	*(69900)*				2.49	III	15000	*(66700)*	2	**4C160**	151	
			2.49	III	21900	*(97500)*				2.49	III	22000	*(97800)*	2	**4D160**	151	
8.12	14400	*(1630)*	1.09	I	8580	*(38200)*	9.80	11900	*(1350)*	1.14	I	9070	*(40300)*	2	**4B120**	179	
			1.32	I	8580	*(38200)*				1.52	II	9070	*(40300)*	2	**4B125**	179	
			1.58	II	8580	*(38200)*				1.58	II	9070	*(40300)*	2	**4B160**	179	
			2.49	III	15600	*(69400)*				2.49	III	15700	*(69600)*	2	**4C160**	179	
			2.49	III	21800	*(97100)*				2.49	III	21900	*(97500)*	2	**4D160**	179	
7.02	16600	*(1880)*	0.87	-	8030	*(35700)*	8.47	13800	*(1560)*	0.87	-	8710	*(38700)*	2	**4B120**	207	
			1.08	I	8030	*(35700)*				1.08	I	8710	*(38700)*	2	**4B125**	207	
			1.37	I	8030	*(35700)*				1.37	I	8710	*(38700)*	2	**4B140**	207	
			1.48	II	15400	*(68600)*				1.48	II	15600	*(69600)*	2	**4C140**	207	
			2.49	III	15400	*(68600)*				2.49	III	15600	*(69600)*	2	**4C160**	207	
			2.49	III	21700	*(96700)*				2.49	III	21900	*(97200)*	2	**4D160**	207	
5.84	20000	*(2260)*	1.01	I	6930	*(30800)*	7.04	16600	*(1880)*	1.01	I	8040	*(35800)*	2	**4B140**	249	
			1.14	I	6930	*(30800)*				1.14	I	8040	*(35800)*	2	**4B160**	249	
			1.48	II	15100	*(67100)*				1.48	II	15400	*(68600)*	2	**4C160**	249	
			1.48	II	21600	*(95900)*				1.48	II	21700	*(96700)*	2	**4D160**	249	
4.76	24500	*(2770)*	0.93	-	4640	*(20600)*	5.75	20300	*(2300)*	0.93	-	6810	*(30300)*	2	**4B140**	305	
			1.01	I	14500	*(64500)*				1.01	I	15000	*(66900)*	2	**4C140**	305	
			1.48	II	14500	*(64500)*				1.48	II	15000	*(66900)*	2	**4C160**	305	
			1.48	II	21300	*(94600)*				1.48	II	21500	*(95800)*	2	**4D160**	305	

Notes: [1] For double reduction and 1/8 HP single reduction Y4 ratings, refer to selection tables on pages 2.91 thru 2.130.
[2] Variable Frequency Drive (VFD) notes (see page 2.8 for Constant Torque Speed Ranges):

Y4 Mounting Single Reduction Selection Tables

3 HP (2.2 kW)

Y4 Mounting Position[1]:

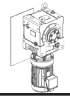

Dimension Pages:

Single Reduction	2.132-2.143
Single Reduction,Y2	2.144
Double Reduction	2.146-2.161
Double Reduction, Y2	2.162

Frequency	50 Hz	60 Hz
Input Speed	1450 RPM	1750 RPM
Number of Poles	4	

50Hz							60 Hz							Selection			
Output Speed (RPM)	Output Torque		Service Factor		Solid Shaft Overhung Load		Output Speed (RPM)	Output Torque		Service Factor[1]		Solid Shaft Overhung Load		Base			VFD[1]
	in•lbs	*(N•m)*	SF	AGMA Class	lbs	*(N)*		in•lbs	*(N•m)*	SF	AGMA Class	lbs	*(N)*	Motor Power Code	Frame Size	Ratio	
69.0	2480	*(281)*	1.07	I	4700	*(20900)*	83.3	2060	*(232)*	1.07	I	4480	*(19900)*	3	**4A100**	21	
			1.45	II	4700	*(20900)*				1.45	II	4480	*(19900)*	3	**4A105**	21	
			1.61	II	4700	*(20900)*				1.61	II	4480	*(19900)*	3	**4A110**	21	
			1.78	II	4700	*(20900)*				1.78	II	4480	*(19900)*	3	**4A115**	21	
			2.30	III	4700	*(20900)*				2.30	III	4480	*(19900)*	3	**4A120**	21	
			3.16	III	4700	*(20900)*				2.64	III	4480	*(19900)*	3	**4A125**	21	
			3.16	III	6530	*(29100)*				2.64	III	6200	*(27600)*	3	**4B125**	21	
64.7	2650	*(299)*	2.30	III	4780	*(21200)*	78.1	2190	*(248)*	2.30	III	4560	*(20300)*	3	**4A120**	22	
			3.16	III	4780	*(21200)*				3.16	III	4560	*(20300)*	3	**4A125**	22	
			3.16	III	6650	*(29600)*				3.16	III	6320	*(28100)*	3	**4B125**	22	
59.2	2900	*(327)*	2.30	III	4880	*(21700)*	71.4	2400	*(271)*	2.30	III	4660	*(20700)*	3	**4A120**	25	
			3.16	III	4880	*(21700)*				3.16	III	4660	*(20700)*	3	**4A125**	25	
			3.16	III	6810	*(30300)*				3.16	III	6470	*(28800)*	3	**4B125**	25	
51.8	3310	*(374)*	1.07	I	5040	*(22400)*	62.5	2740	*(310)*	1.07	I	4820	*(21400)*	3	**4A100**	28	
			1.45	II	5040	*(22400)*				1.45	II	4820	*(21400)*	3	**4A105**	28	
			1.61	II	5040	*(22400)*				1.61	II	4820	*(21400)*	3	**4A110**	28	
			1.78	II	5040	*(22400)*				1.78	II	4820	*(21400)*	3	**4A115**	28	
			2.30	III	5040	*(22400)*				2.30	III	4820	*(21400)*	3	**4A120**	28	
			3.16	III	5040	*(22400)*				3.16	III	4820	*(21400)*	3	**4A125**	28	
			3.16	III	7060	*(31400)*				3.16	III	6710	*(29800)*	3	**4B125**	28	
41.2	4160	*(470)*	1.07	I	5320	*(23600)*	49.7	3450	*(390)*	1.07	I	5090	*(22600)*	3	**4A100**	35	
			1.45	II	5320	*(23600)*				1.45	II	5090	*(22600)*	3	**4A105**	35	
			1.61	II	5320	*(23600)*				1.61	II	5090	*(22600)*	3	**4A110**	35	
			1.78	II	5320	*(23600)*				1.78	II	5090	*(22600)*	3	**4A115**	35	
			2.30	III	5320	*(23600)*				2.30	III	5090	*(22600)*	3	**4A120**	35	
			2.69	III	5320	*(23600)*				2.69	III	5090	*(22600)*	3	**4A125**	35	
			2.74	III	5320	*(23600)*				2.74	III	5090	*(22600)*	3	**4A140**	35	
			2.69	III	7490	*(33300)*				2.69	III	7130	*(31700)*	3	**4B125**	35	
37.7	4550	*(514)*	1.07	I	5420	*(24100)*	45.5	3770	*(426)*	1.07	I	5200	*(23100)*	3	**4A100**	39	
			1.45	II	5420	*(24100)*				1.45	II	5200	*(23100)*	3	**4A105**	39	
			1.61	II	5420	*(24100)*				1.61	II	5200	*(23100)*	3	**4A110**	39	
			1.78	II	5420	*(24100)*				1.78	II	5200	*(23100)*	3	**4A115**	39	
			2.30	III	5420	*(24100)*				2.30	III	5200	*(23100)*	3	**4A120**	39	
			2.51	III	5420	*(24100)*				2.51	III	5200	*(23100)*	3	**4A125**	39	
			2.69	III	7660	*(34100)*				2.69	III	7300	*(32500)*	3	**4B125**	39	

Notes: [1] For double reduction and 1/8 HP single reduction Y4 ratings, refer to selection tables on pages 2.91 thru 2.130.
[2] Variable Frequency Drive (VFD) notes (see page 2.8 for Constant Torque Speed Ranges):

Y4 Mounting Single Reduction Selection Tables

3 HP (2.2 kW)

Y4 Mounting Position[1]:

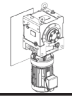

Dimension Pages:

Single Reduction	2.132-2.143
Single Reduction,Y2	2.144
Double Reduction	2.146-2.161
Double Reduction, Y2	2.162

Frequency	50 Hz	60 Hz
Input Speed	1450 RPM	1750 RPM
Number of Poles	4	

50Hz							60 Hz						Selection			
Output Speed (RPM)	Output Torque		Service Factor		Solid Shaft Overhung Load		Output Speed (RPM)	Output Torque		Service Factor[1]		Solid Shaft Overhung Load		Base			VFD[1]
	in•lbs	*(N•m)*	SF	AGMA Class	lbs	*(N)*		in•lbs	*(N•m)*	SF	AGMA Class	lbs	*(N)*	Motor Power Code	Frame Size	Ratio	
31.9	5380	*(608)*	1.07	I	5620	*(25000)*	38.5	4460	*(504)*	1.07	I	5400	*(24000)*	3	**4A100**	46	
			1.45	II	5620	*(25000)*				1.45	II	5400	*(24000)*	3	**4A105**	46	
			1.61	II	5620	*(25000)*				1.61	II	5400	*(24000)*	3	**4A110**	46	
			1.77	II	5620	*(25000)*				1.77	II	5400	*(24000)*	3	**4A115**	46	
			2.12	III	5620	*(25000)*				2.12	III	5400	*(24000)*	3	**4A120**	46	
			2.30	III	7990	*(35600)*				2.30	III	7620	*(33900)*	3	**4B120**	46	
			2.69	III	7990	*(35600)*				2.69	III	7620	*(33900)*	3	**4B125**	46	
27.6	6210	*(701)*	1.07	I	5440	*(24200)*	33.3	5140	*(581)*	1.07	I	5570	*(24800)*	3	**4A100**	53	
			1.45	II	5440	*(24200)*				1.45	II	5570	*(24800)*	3	**4A105**	53	
			1.61	II	5440	*(24200)*				1.61	II	5570	*(24800)*	3	**4A110**	53	
			1.77	II	5440	*(24200)*				1.77	II	5570	*(24800)*	3	**4A115**	53	
			1.84	II	5440	*(24200)*				1.84	II	5570	*(24800)*	3	**4A120**	53	
			2.30	III	8280	*(36800)*				2.30	III	7900	*(35200)*	3	**4B120**	53	
			2.69	III	8280	*(36800)*				2.69	III	7900	*(35200)*	3	**4B125**	53	
24.4	7040	*(795)*	0.90	-	5210	*(23200)*	29.4	5830	*(659)*	0.90	-	5530	*(24600)*	3	**4A100**	60	
			1.12	I	5210	*(23200)*				1.12	I	5530	*(24600)*	3	**4A105**	60	
			1.44	II	5210	*(23200)*				1.44	II	5530	*(24600)*	3	**4A110**	60	
			1.62	II	5210	*(23200)*				1.62	II	5530	*(24600)*	3	**4A115**	60	
			2.22	III	8530	*(38000)*				2.30	III	8150	*(36300)*	3	**4B120**	60	
			2.57	III	8530	*(38000)*				2.57	III	8150	*(36300)*	3	**4B125**	60	
			2.53	III	12100	*(53900)*				2.53	III	11500	*(51200)*	3	**4C140**	60	
21.6	7950	*(898)*	0.86	-	4920	*(21900)*	26.0	6580	*(744)*	0.88	-	5340	*(23800)*	3	**4A100**	67	
			1.04	I	4920	*(21900)*				1.06	I	5340	*(23800)*	3	**4A105**	67	
			1.24	I	4920	*(21900)*				1.24	I	5340	*(23800)*	3	**4A110**	67	
			1.41	II	4920	*(21900)*				1.41	II	5340	*(23800)*	3	**4A115**	67	
			1.44	II	4920	*(21900)*				1.44	II	5340	*(23800)*	3	**4A120**	67	
			1.80	II	8780	*(39100)*				1.80	II	8400	*(37400)*	3	**4B120**	67	
			2.18	III	8780	*(39100)*				2.22	III	8400	*(37400)*	3	**4B125**	67	
			2.53	III	8780	*(39100)*				2.53	III	8400	*(37400)*	3	**4B140**	67	
			2.86	III	8780	*(39100)*				2.86	III	8400	*(37400)*	3	**4B160**	67	
19.7	8690	*(982)*	0.86	-	4650	*(20700)*	23.8	7200	*(814)*	0.88	-	5170	*(23000)*	3	**4A100**	74	
			1.04	I	4650	*(20700)*				1.06	I	5170	*(23000)*	3	**4A105**	74	
			1.24	I	4650	*(20700)*				1.24	I	5170	*(23000)*	3	**4A110**	74	
			1.31	I	4650	*(20700)*				1.31	I	5170	*(23000)*	3	**4A115**	74	
			1.80	II	8960	*(39900)*				1.80	II	8580	*(38200)*	3	**4B120**	74	
			2.18	III	8960	*(39900)*				2.22	III	8580	*(38200)*	3	**4B125**	74	
			2.53	III	8960	*(39900)*				2.53	III	8580	*(38200)*	3	**4B140**	74	
			2.62	III	8960	*(39900)*				2.62	III	8580	*(38200)*	3	**4B160**	74	

Notes: [1] For double reduction and 1/8 HP single reduction Y4 ratings, refer to selection tables on pages 2.91 thru 2.130.
[2] Variable Frequency Drive (VFD) notes (see page 2.8 for Constant Torque Speed Ranges):

Y4 Mounting Single Reduction Selection Tables

3 HP (2.2 kW)

Y4 Mounting Position[1]:

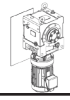

Dimension Pages:

Single Reduction	2.132-2.143
Single Reduction,Y2	2.144
Double Reduction	2.146-2.161
Double Reduction, Y2	2.162

Frequency	50 Hz	60 Hz
Input Speed	1450 RPM	1750 RPM
Number of Poles	4	

50Hz							60 Hz							Selection			
Output Speed (RPM)	Output Torque		Service Factor		Solid Shaft Overhung Load		Output Speed (RPM)	Output Torque		Service Factor[1]		Solid Shaft Overhung Load		Base			VFD[1]
	in•lbs	*(N•m)*	SF	AGMA Class	lbs	*(N)*		in•lbs	*(N•m)*	SF	AGMA Class	lbs	*(N)*	Motor Power Code	Frame Size	Ratio	
18.1	9460	*(1070)*	0.76	-	4310	*(19200)*	21.9	7840	*(886)*	0.76	-	4960	*(22100)*	3	**4A105**	80	
			0.87	-	4310	*(19200)*				0.87	-	4960	*(22100)*	3	**4A110**	80	
			1.01	I	4310	*(19200)*				1.01	I	4960	*(22100)*	3	**4A115**	80	
			1.21	I	4310	*(19200)*				1.21	I	4960	*(22100)*	3	**4A120**	80	
			1.40	II	9140	*(40600)*				1.40	II	8750	*(38900)*	3	**4B120**	80	
			1.80	II	9140	*(40600)*				1.80	II	8750	*(38900)*	3	**4B125**	80	
			2.40	III	9140	*(40600)*				2.40	III	8750	*(38900)*	3	**4B140**	80	
			2.53	III	13100	*(58100)*				2.53	III	12500	*(55400)*	3	**4C140**	80	
16.6	10300	*(1170)*	0.76	-	3850	*(17100)*	20.0	8570	*(969)*	0.76	-	4690	*(20900)*	3	**4A105**	88	
			0.87	-	3850	*(17100)*				0.87	-	4690	*(20900)*	3	**4A110**	88	
			1.01	I	3850	*(17100)*				1.01	I	4690	*(20900)*	3	**4A115**	88	
			1.10	I	3850	*(17100)*				1.10	I	4690	*(20900)*	3	**4A120**	88	
			1.40	II	9320	*(41400)*				1.40	II	8940	*(39800)*	3	**4B120**	88	
			1.80	II	9320	*(41400)*				1.80	II	8940	*(39800)*	3	**4B125**	88	
			2.20	III	9320	*(41400)*				2.20	III	8940	*(39800)*	3	**4B140**	88	
			2.53	III	13400	*(59400)*				2.53	III	12700	*(56700)*	3	**4C140**	88	
14.3	12000	*(1360)*	0.87	-	2610	*(11600)*	17.2	9940	*(1120)*	0.87	-	4070	*(18100)*	3	**4A110**	102	
			0.95	-	2610	*(11600)*				0.95	-	4070	*(18100)*	3	**4A115**	102	
			1.30	I	9050	*(40300)*				1.36	I	9240	*(41100)*	3	**4B120**	102	
			1.58	II	9050	*(40300)*				1.71	II	9240	*(41100)*	3	**4B125**	102	
			1.90	II	9050	*(40300)*				1.90	II	9240	*(41100)*	3	**4B160**	102	
12.9	13200	*(1500)*	0.82	-	290	*(1290)*	15.6	11000	*(1240)*	0.82	-	3450	*(15400)*	3	**4A115**	112	
			0.86	-	290	*(1290)*				0.86	-	3450	*(15400)*	3	**4A120**	112	
			1.08	I	8820	*(39200)*				1.13	I	9220	*(41000)*	3	**4B120**	112	
			1.31	I	8820	*(39200)*				1.45	II	9220	*(41000)*	3	**4B125**	112	
			1.70	II	8820	*(39200)*				1.70	II	9220	*(41000)*	3	**4B140**	112	
			1.72	II	8820	*(39200)*				1.72	II	9220	*(41000)*	3	**4B160**	112	
11.8	14500	*(1640)*	1.08	I	8560	*(38100)*	14.3	12000	*(1360)*	1.13	I	9050	*(40300)*	3	**4B120**	123	
			1.31	I	8560	*(38100)*				1.45	II	9050	*(40300)*	3	**4B125**	123	
			1.57	II	8560	*(38100)*				1.57	II	9050	*(40300)*	3	**4B140**	123	
			1.70	II	14500	*(64500)*				1.70	II	13900	*(61600)*	3	**4C140**	123	
			3.14	III	14500	*(64500)*				3.14	III	13900	*(61600)*	3	**4C160**	123	
9.63	17800	*(2010)*	0.87	-	7690	*(34200)*	11.6	14700	*(1670)*	0.87	-	8500	*(37800)*	3	**4B120**	151	
			1.06	I	7690	*(34200)*				1.08	I	8500	*(37800)*	3	**4B125**	151	
			1.28	I	7690	*(34200)*				1.28	I	8500	*(37800)*	3	**4B160**	151	
			1.70	II	15200	*(67600)*				1.70	II	14600	*(64700)*	3	**4C160**	151	
			2.56	III	15200	*(67600)*				2.56	III	14600	*(64700)*	3	**4C170**	151	(-)

Notes: [1] For double reduction and 1/8 HP single reduction Y4 ratings, refer to selection tables on pages 2.91 thru 2.130.
[2] Variable Frequency Drive (VFD) notes (see page 2.8 for Constant Torque Speed Ranges):

Y4 Mounting Single Reduction Selection Tables

3 HP (2.2 kW)

Y4 Mounting Position[1]:

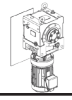

Dimension Pages:

Single Reduction	2.132-2.143
Single Reduction,Y2	2.144
Double Reduction	2.146-2.161
Double Reduction, Y2	2.162

Frequency	50 Hz	60 Hz
Input Speed	1450 RPM	1750 RPM
Number of Poles	4	

50Hz							60 Hz							Selection			
Output Speed (RPM)	Output Torque		Service Factor		Solid Shaft Overhung Load		Output Speed (RPM)	Output Torque		Service Factor[1]		Solid Shaft Overhung Load		Base			VFD[1]
	in•lbs	(N•m)	SF	AGMA Class	lbs	(N)		in•lbs	(N•m)	SF	AGMA Class	lbs	(N)	Motor Power Code	Frame Size	Ratio	
8.12	21100	(2380)	0.74	-	6500	(28900)	9.80	17500	(1980)	0.78	-	7790	(34600)	3	**4B120**	179	
			0.90	-	6500	(28900)				1.04	I	7790	(34600)	3	**4B125**	179	
			1.08	I	6500	(28900)				1.08	I	7790	(34600)	3	**4B160**	179	
			1.70	II	15000	(66500)				1.70	II	15100	(67300)	3	**4C160**	179	
			2.16	III	15000	(66500)				2.16	III	15100	(67300)	3	**4C170**	179	
7.02	24400	(2760)	0.93	-	4730	(21000)	8.47	20200	(2290)	0.93	-	6850	(30500)	3	**4B140**	207	
			1.01	I	14500	(64600)				1.01	I	15100	(67000)	3	**4C140**	207	
			1.70	II	14500	(64600)				1.70	II	15100	(67000)	3	**4C160**	207	
			1.86	II	14500	(64600)				1.86	II	15100	(67000)	3	**4C170**	207	
5.84	29400	(3320)	1.01	I	13700	(61100)	7.04	24300	(2750)	1.01	I	14500	(64700)	3	**4C160**	249	
			1.55	II	13700	(61100)				1.55	II	14500	(64700)	3	**4C170**	249	
			1.70	II	20900	(93000)				1.70	II	21300	(94700)	3	**4D170**	249	
			2.53	III	20900	(93000)				2.53	III	21300	(94700)	3	**4D180**	249	(-)
			2.53	III	22300	(99300)				2.53	III	22600	(100000)	3	**4E180**	249	(-)
4.76	36000	(4070)	1.01	I	12400	(55000)	5.75	29800	(3370)	1.01	I	13700	(60800)	3	**4C160**	305	
			1.26	I	12400	(55000)				1.26	I	13700	(60800)	3	**4C170**	305	
			1.70	II	20300	(90200)				1.70	II	20900	(92800)	3	**4D170**	305	
			2.14	III	20300	(90200)				2.53	III	20900	(92800)	3	**4D180**	305	(-)
			2.53	III	22000	(97800)				2.53	III	22300	(99200)	3	**4E180**	305	(-)

Sold & Serviced By:
ELECTROMATE
Toll Free Phone (877) SERVO98
www.electromate.com
sales@electromate.com

Notes: [1] For double reduction and 1/8 HP single reduction Y4 ratings, refer to selection tables on pages 2.91 thru 2.130.
[2] Variable Frequency Drive (VFD) notes (see page 2.8 for Constant Torque Speed Ranges):

Y4 Mounting Single Reduction Selection Tables

5 HP (3.7 kW)

Y4 Mounting Position[1]:

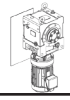

Dimension Pages:

Single Reduction	2.132-2.143
Single Reduction,Y2	2.144
Double Reduction	2.146-2.161
Double Reduction, Y2	2.162

Frequency	50 Hz	60 Hz
Input Speed	1450 RPM	1750 RPM
Number of Poles	4	

50Hz							60 Hz						Selection			
Output Speed (RPM)	Output Torque		Service Factor		Solid Shaft Overhung Load		Output Speed (RPM)	Output Torque		Service Factor[1]		Solid Shaft Overhung Load		Base			VFD[1]
	in•lbs	*(N•m)*	SF	AGMA Class	lbs	*(N)*		in•lbs	*(N•m)*	SF	AGMA Class	lbs	*(N)*	Motor Power Code	Frame Size	Ratio	
69.0	4180	*(472)*	1.06	I	4470	*(19900)*	83.3	3460	*(391)*	1.06	I	4290	*(19100)*	5	**4A115**	21	
			1.37	I	4470	*(19900)*				1.37	I	4290	*(19100)*	5	**4A120**	21	
			1.88	II	4470	*(19900)*				1.57	II	4290	*(19100)*	5	**4A125**	21	
			2.73	III	4470	*(19900)*				2.73	III	4290	*(19100)*	5	**4A140**	21	
			1.88	II	6350	*(28200)*				1.57	II	6050	*(26900)*	5	**4B125**	21	
			3.00	III	6350	*(28200)*				3.00	III	6050	*(26900)*	5	**4B140**	21	
			3.00	III	8950	*(39800)*				3.00	III	8510	*(37800)*	5	**4C140**	21	
64.7	4450	*(503)*	1.37	I	4530	*(20100)*	78.1	3690	*(417)*	1.37	I	4350	*(19400)*	5	**4A120**	22	
			1.88	II	4530	*(20100)*				1.88	II	4350	*(19400)*	5	**4A125**	22	
			2.56	III	4530	*(20100)*				2.56	III	4350	*(19400)*	5	**4A140**	22	
			1.88	II	6450	*(28700)*				1.88	II	6150	*(27400)*	5	**4B125**	22	
			3.00	III	6450	*(28700)*				3.00	III	6150	*(27400)*	5	**4B140**	22	
			3.00	III	9110	*(40500)*				3.00	III	8660	*(38500)*	5	**4C140**	22	
59.2	4870	*(550)*	1.37	I	4610	*(20500)*	71.4	4040	*(456)*	1.37	I	4440	*(19700)*	5	**4A120**	25	
			1.88	II	4610	*(20500)*				1.88	II	4440	*(19700)*	5	**4A125**	25	
			2.34	III	4610	*(20500)*				2.34	III	4440	*(19700)*	5	**4A140**	25	
			1.88	II	6600	*(29300)*				1.88	II	6300	*(28000)*	5	**4B125**	25	
			3.00	III	6600	*(29300)*				3.00	III	6300	*(28000)*	5	**4B140**	25	
			3.00	III	9330	*(41500)*				3.00	III	8870	*(39500)*	5	**4C140**	25	
51.8	5570	*(629)*	1.06	I	4730	*(21100)*	62.5	4610	*(521)*	1.06	I	4560	*(20300)*	5	**4A115**	28	
			1.37	I	4730	*(21100)*				1.37	I	4560	*(20300)*	5	**4A120**	28	
			1.88	II	4730	*(21100)*				1.88	II	4560	*(20300)*	5	**4A125**	28	
			2.05	III	4730	*(21100)*				2.05	III	4560	*(20300)*	5	**4A140**	28	
			1.88	II	6810	*(30300)*				1.88	II	6510	*(28900)*	5	**4B125**	28	
			3.00	III	6810	*(30300)*				3.00	III	6510	*(28900)*	5	**4B140**	28	
			3.00	III	9660	*(43000)*				3.00	III	9190	*(40900)*	5	**4C140**	28	
41.2	7000	*(791)*	1.06	I	4930	*(21900)*	49.7	5800	*(655)*	1.06	I	4770	*(21200)*	5	**4A115**	35	
			1.37	I	4930	*(21900)*				1.37	I	4770	*(21200)*	5	**4A120**	35	
			1.60	II	4930	*(21900)*				1.60	II	4770	*(21200)*	5	**4A125**	35	
			1.63	II	4930	*(21900)*				1.63	II	4770	*(21200)*	5	**4A140**	35	
			1.60	II	7180	*(32000)*				1.60	II	6880	*(30600)*	5	**4B125**	35	
			3.00	III	7180	*(32000)*				3.00	III	6880	*(30600)*	5	**4B140**	35	
			3.00	III	10200	*(45600)*				3.00	III	9760	*(43400)*	5	**4C140**	35	

Notes: [1] For double reduction and 1/8 HP single reduction Y4 ratings, refer to selection tables on pages 2.91 thru 2.130.
[2] Variable Frequency Drive (VFD) notes (see page 2.8 for Constant Torque Speed Ranges):

Y4 Mounting Single Reduction Selection Tables

5 HP (3.7 kW)

Y4 Mounting Position[1]:

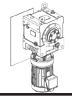

Dimension Pages:

Single Reduction	2.132-2.143
Single Reduction,Y2	2.144
Double Reduction	2.146-2.161
Double Reduction, Y2	2.162

Frequency	50 Hz	60 Hz
Input Speed	1450 RPM	1750 RPM
Number of Poles	4	

50Hz							60 Hz							Selection			
Output Speed (RPM)	Output Torque		Service Factor		Solid Shaft Overhung Load		Output Speed (RPM)	Output Torque		Service Factor[1]		Solid Shaft Overhung Load		Base			VFD[1]
	in•lbs	*(N•m)*	SF	AGMA Class	lbs	*(N)*		in•lbs	*(N•m)*	SF	AGMA Class	lbs	*(N)*	Motor Power Code	Frame Size	Ratio	
37.7	7660	*(865)*	1.06	I	5000	*(22200)*	45.5	6340	*(717)*	1.06	I	4850	*(21600)*	5	**4A115**	39	
			1.37	I	5000	*(22200)*				1.37	I	4850	*(21600)*	5	**4A120**	39	
			1.49	II	5000	*(22200)*				1.49	II	4850	*(21600)*	5	**4A125**	39	
			1.60	II	7330	*(32600)*				1.60	II	7020	*(31200)*	5	**4B125**	39	
			2.97	III	7330	*(32600)*				2.97	III	7020	*(31200)*	5	**4B140**	39	
			3.00	III	10500	*(46600)*				3.00	III	9990	*(44500)*	5	**4C140**	39	
31.9	9050	*(1020)*	1.05	I	4500	*(20000)*	38.5	7500	*(847)*	1.05	I	4980	*(22200)*	5	**4A115**	46	
			1.26	I	4500	*(20000)*				1.26	I	4980	*(22200)*	5	**4A120**	46	
			1.37	I	7600	*(33800)*				1.37	I	7300	*(32500)*	5	**4B120**	46	
			1.60	II	7600	*(33800)*				1.60	II	7300	*(32500)*	5	**4B125**	46	
			2.05	III	7600	*(33800)*				2.05	III	7300	*(32500)*	5	**4B140**	46	
			2.51	III	7600	*(33800)*				2.51	III	7300	*(32500)*	5	**4B160**	46	(-)
			3.00	III	10900	*(48600)*				3.00	III	10400	*(46400)*	5	**4C160**	46	(-)
			3.00	III	16300	*(72400)*				3.00	III	15500	*(68800)*	5	**4D160**	46	(-)
27.6	10400	*(1180)*	1.05	I	3790	*(16900)*	33.3	8650	*(977)*	1.05	I	4660	*(20700)*	5	**4A115**	53	
			1.09	I	3790	*(16900)*				1.09	I	4660	*(20700)*	5	**4A120**	53	
			1.37	I	7820	*(34800)*				1.37	I	7530	*(33500)*	5	**4B120**	53	
			1.60	II	7820	*(34800)*				1.60	II	7530	*(33500)*	5	**4B125**	53	
			2.05	III	7820	*(34800)*				2.05	III	7530	*(33500)*	5	**4B140**	53	
			2.18	III	7820	*(34800)*				2.18	III	7530	*(33500)*	5	**4B160**	53	
			3.00	III	11300	*(50300)*				3.00	III	10800	*(48100)*	5	**4C160**	53	
			3.00	III	16900	*(75200)*				3.00	III	16100	*(71600)*	5	**4D160**	53	
24.4	11800	*(1340)*	0.96	-	2780	*(12300)*	29.4	9800	*(1110)*	0.96	-	4140	*(18400)*	5	**4A115**	60	
			1.32	I	8020	*(35700)*				1.37	I	7730	*(34400)*	5	**4B120**	60	
			1.53	II	8020	*(35700)*				1.53	II	7730	*(34400)*	5	**4B125**	60	
			1.92	II	8020	*(35700)*				1.92	II	7730	*(34400)*	5	**4B160**	60	
			3.00	III	11700	*(51800)*				3.00	III	11100	*(49600)*	5	**4C160**	60	
			3.00	III	17500	*(77800)*				3.00	III	16600	*(74000)*	5	**4D160**	60	
			2.62	III	22800	*(101000)*				2.62	III	21600	*(96300)*	5	**4E170**	60	
21.6	13400	*(1510)*	1.07	I	8200	*(36500)*	26.0	11100	*(1250)*	1.07	I	7910	*(35200)*	5	**4B120**	67	
			1.30	I	8200	*(36500)*				1.32	I	7910	*(35200)*	5	**4B125**	67	
			1.50	II	8200	*(36500)*				1.50	II	7910	*(35200)*	5	**4B140**	67	
			1.70	II	8200	*(36500)*				1.70	II	7910	*(35200)*	5	**4B160**	67	
			2.05	III	12000	*(53300)*				2.05	III	11500	*(51000)*	5	**4C160**	67	
			2.62	III	12000	*(53300)*				2.62	III	11500	*(51000)*	5	**4C170**	67	
			2.62	III	18000	*(80300)*				2.62	III	17200	*(76400)*	5	**4D170**	67	
			2.62	III	23100	*(103000)*				2.62	III	22400	*(99600)*	5	**4E170**	67	

Notes: [1] For double reduction and 1/8 HP single reduction Y4 ratings, refer to selection tables on pages 2.91 thru 2.130.
[2] Variable Frequency Drive (VFD) notes (see page 2.8 for Constant Torque Speed Ranges):

Y4 Mounting Single Reduction Selection Tables

5 HP (3.7 kW)

Y4 Mounting Position[1]:

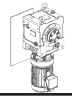

Dimension Pages:

Single Reduction	2.132-2.143
Single Reduction,Y2	2.144
Double Reduction	2.146-2.161
Double Reduction, Y2	2.162

Frequency	50 Hz	60 Hz
Input Speed	1450 RPM	1750 RPM
Number of Poles	4	

50Hz							60 Hz							Selection			
Output Speed (RPM)	Output Torque		Service Factor		Solid Shaft Overhung Load		Output Speed (RPM)	Output Torque		Service Factor[1]		Solid Shaft Overhung Load		Base			VFD[1]
	in•lbs	*(N•m)*	SF	AGMA Class	lbs	*(N)*		in•lbs	*(N•m)*	SF	AGMA Class	lbs	*(N)*	Motor Power Code	Frame Size	Ratio	
19.7	14600	*(1650)*	1.07	I	8320	*(37000)*	23.8	12100	*(1370)*	1.07	I	8050	*(35800)*	5	**4B120**	74	
			1.30	I	8320	*(37000)*				1.32	I	8050	*(35800)*	5	**4B125**	74	
			1.50	II	8320	*(37000)*				1.50	II	8050	*(35800)*	5	**4B140**	74	
			1.56	II	8320	*(37000)*				1.56	II	8050	*(35800)*	5	**4B160**	74	
			2.05	III	12200	*(54400)*				2.05	III	11700	*(52100)*	5	**4C160**	74	
			2.62	III	12200	*(54400)*				2.62	III	11700	*(52100)*	5	**4C170**	74	
			2.62	III	18500	*(82100)*				2.62	III	17600	*(78200)*	5	**4D170**	74	
			2.62	III	23100	*(103000)*				2.62	III	22900	*(102000)*	5	**4E170**	74	
18.1	15900	*(1800)*	0.83	-	8220	*(36600)*	21.9	13200	*(1490)*	0.83	-	8180	*(36400)*	5	**4B120**	80	
			1.07	I	8220	*(36600)*				1.07	I	8180	*(36400)*	5	**4B125**	80	
			1.43	II	8220	*(36600)*				1.43	II	8180	*(36400)*	5	**4B140**	80	
			1.50	II	12500	*(55400)*				1.50	II	11900	*(53100)*	5	**4C140**	80	
			2.05	III	12500	*(55400)*				2.05	III	11900	*(53100)*	5	**4C160**	80	
			2.86	III	12500	*(55400)*				2.86	III	11900	*(53100)*	5	**4C170**	80	(-)
			3.00	III	18900	*(83900)*				3.00	III	18000	*(80000)*	5	**4D170**	80	(-)
			3.00	III	23000	*(102000)*				3.00	III	23100	*(103000)*	5	**4E170**	80	(-)
16.6	17400	*(1970)*	0.83	-	7810	*(34700)*	20.0	14400	*(1630)*	0.83	-	8310	*(36900)*	5	**4B120**	88	
			1.07	I	7810	*(34700)*				1.07	I	8310	*(36900)*	5	**4B125**	88	
			1.31	I	7810	*(34700)*				1.31	I	8310	*(36900)*	5	**4B140**	88	
			1.50	II	12700	*(56500)*				1.50	II	12200	*(54200)*	5	**4C140**	88	
			2.05	III	12700	*(56500)*				2.05	III	12200	*(54200)*	5	**4C160**	88	
			2.61	III	12700	*(56500)*				2.61	III	12200	*(54200)*	5	**4C170**	88	(-)
			3.00	III	19300	*(85800)*				3.00	III	18400	*(81900)*	5	**4D170**	88	(-)
			3.00	III	22900	*(102000)*				3.00	III	23100	*(103000)*	5	**4E170**	88	(-)
14.3	20200	*(2280)*	0.77	-	6870	*(30600)*	17.2	16700	*(1890)*	0.81	-	8000	*(35600)*	5	**4B120**	102	
			0.94	-	6870	*(30600)*				1.02	I	8000	*(35600)*	5	**4B125**	102	
			1.13	I	6870	*(30600)*				1.13	I	8000	*(35600)*	5	**4B160**	102	
			2.05	III	13100	*(58200)*				2.05	III	12600	*(56000)*	5	**4C160**	102	
			2.25	III	13100	*(58200)*				2.25	III	12600	*(56000)*	5	**4C170**	102	(-)
			3.00	III	20000	*(89000)*				3.00	III	19100	*(85000)*	5	**4D170**	102	(-)
			3.00	III	22800	*(101000)*				3.00	III	23000	*(102000)*	5	**4E170**	102	(-)
			2.62	III	31300	*(139000)*				2.62	III	31400	*(140000)*	5	**4F180**	102	

Notes: [1] For double reduction and 1/8 HP single reduction Y4 ratings, refer to selection tables on pages 2.91 thru 2.130.
[2] Variable Frequency Drive (VFD) notes (see page 2.8 for Constant Torque Speed Ranges):

Y4 Mounting Single Reduction Selection Tables

5 HP (3.7 kW)

Y4 Mounting Position[1]:

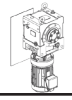

Dimension Pages:

Single Reduction	2.132-2.143
Single Reduction,Y2	2.144
Double Reduction	2.146-2.161
Double Reduction, Y2	2.162

Frequency	50 Hz	60 Hz
Input Speed	1450 RPM	1750 RPM
Number of Poles	4	

50Hz							60 Hz							Selection			
Output Speed (RPM)	Output Torque		Service Factor		Solid Shaft Overhung Load		Output Speed (RPM)	Output Torque		Service Factor[1]		Solid Shaft Overhung Load		Base			VFD[1]
	in•lbs	(N•m)	SF	AGMA Class	lbs	(N)		in•lbs	(N•m)	SF	AGMA Class	lbs	(N)	Motor Power Code	Frame Size	Ratio	
12.9	22300	(2520)	0.78	-	5960	(26500)	15.6	18500	(2090)	0.86	-	7490	(33300)	5	**4B125**	112	
			1.01	I	5960	(26500)				1.01	I	7490	(33300)	5	**4B140**	112	
			1.02	I	5960	(26500)				1.02	I	7490	(33300)	5	**4B160**	112	
			2.04	III	13300	(59300)				2.04	III	12800	(57100)	5	**4C160**	112	
			2.05	III	20500	(91200)				2.05	III	19600	(87100)	5	**4D160**	112	
			2.62	III	20500	(91200)				2.62	III	19600	(87100)	5	**4D180**	112	
			2.62	III	22700	(101000)				2.62	III	22900	(102000)	5	**4E180**	112	
			2.62	III	31200	(139000)				2.62	III	31400	(140000)	5	**4F180**	112	
11.8	24400	(2750)	0.78	-	4760	(21200)	14.3	20200	(2280)	0.86	-	6870	(30600)	5	**4B125**	123	
			0.93	-	4760	(21200)				0.93	-	6870	(30600)	5	**4B140**	123	
			1.01	I	13600	(60300)				1.01	I	13100	(58200)	5	**4C140**	123	
			1.87	II	13600	(60300)				1.87	II	13100	(58200)	5	**4C160**	123	
			2.05	III	20900	(93100)				2.05	III	20000	(89000)	5	**4D160**	123	
			2.62	III	20900	(93100)				2.62	III	20000	(89000)	5	**4D180**	123	
			2.62	III	22600	(100000)				2.62	III	22800	(101000)	5	**4E180**	123	
			2.62	III	31100	(138000)				2.62	III	31300	(139000)	5	**4F180**	123	
9.63	29900	(3380)	1.01	I	13600	(60700)	11.6	24800	(2800)	1.01	I	13600	(60500)	5	**4C160**	151	
			1.52	II	13600	(60700)				1.52	II	13600	(60500)	5	**4C170**	151	
			2.05	III	20900	(92800)				2.05	III	21000	(93500)	5	**4D170**	151	
			2.05	III	22300	(99100)				2.05	III	22500	(100000)	5	**4E170**	151	
			2.62	III	22300	(99100)				2.62	III	22500	(100000)	5	**4E190**	151	
			2.62	III	30900	(137000)				2.62	III	31100	(138000)	5	**4F190**	151	
8.12	35500	(4010)	1.01	I	12500	(55600)	9.80	29400	(3320)	1.01	I	13700	(61100)	5	**4C160**	179	
			1.28	I	12500	(55600)				1.28	I	13700	(61100)	5	**4C170**	179	
			1.50	II	20300	(90400)				1.50	II	20900	(93000)	5	**4D170**	179	
			1.50	II	22000	(97900)				1.50	II	22300	(99300)	5	**4E170**	179	
			1.92	II	22000	(97900)				1.92	II	22300	(99300)	5	**4E190**	179	
			1.92	II	30600	(136000)				1.92	II	30900	(137000)	5	**4F190**	179	
7.02	41100	(4640)	1.01	I	11000	(48900)	8.47	34000	(3840)	1.01	I	12800	(57100)	5	**4C160**	207	
			1.11	I	11000	(48900)				1.11	I	12800	(57100)	5	**4C170**	207	
			1.50	II	19700	(87500)				1.50	II	20500	(91100)	5	**4D170**	207	
			1.88	II	19700	(87500)				2.05	III	20500	(91100)	5	**4D180**	207	(-)
			2.05	III	21700	(96600)				2.05	III	22100	(98200)	5	**4E180**	207	(-)
			2.05	III	30400	(135000)				2.05	III	30700	(137000)	5	**4F180**	207	(-)
5.84	49400	(5580)	1.01	I	18500	(82200)	7.04	40900	(4630)	1.01	I	19700	(87600)	5	**4D170**	249	
			1.50	II	18500	(82200)				1.50	II	19700	(87600)	5	**4D180**	249	(-)
			1.50	II	21300	(94800)				1.50	II	21700	(96700)	5	**4E180**	249	(-)
			1.50	II	30000	(134000)				1.50	II	30400	(135000)	5	**4F180**	249	(-)

Notes: [1] For double reduction and 1/8 HP single reduction Y4 ratings, refer to selection tables on pages 2.91 thru 2.130.
[2] Variable Frequency Drive (VFD) notes (see page 2.8 for Constant Torque Speed Ranges):

Y4 Mounting Single Reduction Selection Tables

5 HP (3.7 kW)

Y4 Mounting Position[1]:

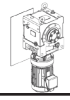

Dimension Pages:

Single Reduction	2.132-2.143
Single Reduction,Y2	2.144
Double Reduction	2.146-2.161
Double Reduction, Y2	2.162

Frequency	50 Hz	60 Hz
Input Speed	1450 RPM	1750 RPM
Number of Poles	4	

50Hz							60 Hz							Selection			
Output Speed (RPM)	Output Torque		Service Factor		Solid Shaft Overhung Load		Output Speed (RPM)	Output Torque		Service Factor[1]		Solid Shaft Overhung Load		Base			VFD[1]
	in•lbs	*(N•m)*	SF	AGMA Class	lbs	*(N)*		in•lbs	*(N•m)*	SF	AGMA Class	lbs	*(N)*	Motor Power Code	Frame Size	Ratio	
4.76	60600	*(6840)*	1.01	I	16400	*(72800)*	5.75	50200	*(5670)*	1.01	I	18400	*(81700)*	5	**4D170**	305	
			1.27	I	16400	*(72800)*				1.50	II	18400	*(81700)*	5	**4D180**	305	(-)
			1.50	II	20700	*(92200)*				1.50	II	21300	*(94600)*	5	**4E180**	305	(-)
			1.50	II	29600	*(131000)*				1.50	II	30000	*(133000)*	5	**4F180**	305	(-)

Sold & Serviced By:
ELECTROMATE
Toll Free Phone (877) SERV098
www.electromate.com
sales@electromate.com

Notes: [1] For double reduction and 1/8 HP single reduction Y4 ratings, refer to selection tables on pages 2.91 thru 2.130.
[2] Variable Frequency Drive (VFD) notes (see page 2.8 for Constant Torque Speed Ranges):

(-) = For inverter operation, starting conditions may require ambient temperature of 5° C or higher.

Y4 Mounting Single Reduction Selection Tables

7.5 HP (5.5 kW)

Y4 Mounting Position[1]:

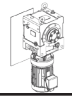

Dimension Pages:

Single Reduction	2.132-2.143
Single Reduction,Y2	2.144
Double Reduction	2.146-2.161
Double Reduction, Y2	2.162

Frequency	50 Hz	60 Hz
Input Speed	1450 RPM	1750 RPM
Number of Poles	4	

50Hz							60 Hz							Selection			
Output Speed (RPM)	Output Torque		Service Factor		Solid Shaft Overhung Load		Output Speed (RPM)	Output Torque		Service Factor[1]		Solid Shaft Overhung Load		Base			VFD[1]
	in•lbs	(N•m)	SF	AGMA Class	lbs	(N)		in•lbs	(N•m)	SF	AGMA Class	lbs	(N)	Motor Power Code	Frame Size	Ratio	
69.0	6210	(701)	0.92	-	4190	(18600)	83.3	5140	(581)	0.92	-	4060	(18100)	8	**4A120**	21	
			1.27	I	4190	(18600)				1.06	I	4060	(18100)	8	**4A125**	21	
			1.84	II	4190	(18600)				1.84	II	4060	(18100)	8	**4A140**	21	
			1.27	I	6130	(27300)				1.06	I	5870	(26100)	8	**4B125**	21	
			2.02	III	6130	(27300)				2.02	III	5870	(26100)	8	**4B140**	21	
			2.02	III	8760	(39000)				2.02	III	8350	(37100)	8	**4C140**	21	
64.7	6620	(748)	0.92	-	4230	(18800)	78.1	5490	(620)	0.92	-	4110	(18300)	8	**4A120**	22	
			1.27	I	4230	(18800)				1.27	I	4110	(18300)	8	**4A125**	22	
			1.72	II	4230	(18800)				1.72	II	4110	(18300)	8	**4A140**	22	
			1.27	I	6220	(27700)				1.27	I	5960	(26500)	8	**4B125**	22	
			2.02	III	6220	(27700)				2.02	III	5960	(26500)	8	**4B140**	22	
			2.75	III	6220	(27700)				2.75	III	5960	(26500)	8	**4B160**	22	
			2.75	III	8900	(39600)				2.75	III	8490	(37700)	8	**4C160**	22	
			2.75	III	13200	(58800)				2.75	III	12600	(55900)	8	**4D160**	22	
59.2	7240	(818)	0.92	-	4290	(19100)	71.4	6000	(678)	0.92	-	4170	(18500)	8	**4A120**	25	
			1.27	I	4290	(19100)				1.27	I	4170	(18500)	8	**4A125**	25	
			1.58	II	4290	(19100)				1.58	II	4170	(18500)	8	**4A140**	25	
			1.27	I	6340	(28200)				1.27	I	6080	(27100)	8	**4B125**	25	
			2.02	III	6340	(28200)				2.02	III	6080	(27100)	8	**4B140**	25	
			2.75	III	6340	(28200)				2.75	III	6080	(27100)	8	**4B160**	25	
			2.75	III	9100	(40500)				2.75	III	8680	(38600)	8	**4C160**	25	
			2.75	III	13500	(60300)				2.75	III	12900	(57200)	8	**4D160**	25	
51.8	8280	(935)	0.92	-	4360	(19400)	62.5	6860	(775)	0.92	-	4250	(18900)	8	**4A120**	28	
			1.26	I	4360	(19400)				1.26	I	4250	(18900)	8	**4A125**	28	
			1.38	I	4360	(19400)				1.38	I	4250	(18900)	8	**4A140**	28	
			1.26	I	6520	(29000)				1.26	I	6270	(27900)	8	**4B125**	28	
			2.02	III	6520	(29000)				2.02	III	6270	(27900)	8	**4B140**	28	
			2.75	III	6520	(29000)				2.75	III	6270	(27900)	8	**4B160**	28	
			2.75	III	9400	(41800)				2.75	III	8980	(39900)	8	**4C160**	28	
			2.75	III	14000	(62400)				2.75	III	13300	(59400)	8	**4D160**	28	

Sold & Serviced By:
ELECTROMATE
Toll Free Phone (877) SERVO98
www.electromate.com
sales@electromate.com

Notes: [1] For double reduction and 1/8 HP single reduction Y4 ratings, refer to selection tables on pages 2.91 thru 2.130.
[2] Variable Frequency Drive (VFD) notes (see page 2.8 for Constant Torque Speed Ranges):

Y4 Mounting Single Reduction Selection Tables

7.5 HP (5.5 kW)

Y4 Mounting Position[1]:

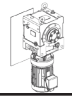

Dimension Pages:

Single Reduction	2.132-2.143
Single Reduction,Y2	2.144
Double Reduction	2.146-2.161
Double Reduction, Y2	2.162

Frequency	50 Hz	60 Hz
Input Speed	1450 RPM	1750 RPM
Number of Poles	4	

50Hz							60 Hz							Selection			
Output Speed (RPM)	Output Torque		Service Factor		Solid Shaft Overhung Load		Output Speed (RPM)	Output Torque		Service Factor[1]		Solid Shaft Overhung Load		Base			VFD[1]
	in•lbs	*(N•m)*	SF	AGMA Class	lbs	*(N)*		in•lbs	*(N•m)*	SF	AGMA Class	lbs	*(N)*	Motor Power Code	Frame Size	Ratio	
41.2	10400	*(1180)*	0.92	-	3810	*(17000)*	49.7	8620	*(974)*	0.92	-	4380	*(19500)*	8	**4A120**	35	
			1.08	I	3810	*(17000)*				1.08	I	4380	*(19500)*	8	**4A125**	35	
			1.10	I	3810	*(17000)*				1.10	I	4380	*(19500)*	8	**4A140**	35	
			1.08	I	6820	*(30300)*				1.08	I	6570	*(29200)*	8	**4B125**	35	
			2.02	III	6820	*(30300)*				2.02	III	6570	*(29200)*	8	**4B140**	35	
			2.19	III	6820	*(30300)*				2.19	III	6570	*(29200)*	8	**4B160**	35	
			2.75	III	9930	*(44200)*				2.75	III	9500	*(42200)*	8	**4C160**	35	
			2.75	III	14900	*(66300)*				2.75	III	14200	*(63100)*	8	**4D160**	35	
			2.59	III	19400	*(86500)*				2.59	III	18500	*(82200)*	8	**4E170**	35	
37.7	11400	*(1290)*	0.92	-	3160	*(14000)*	45.5	9430	*(1070)*	0.92	-	4320	*(19200)*	8	**4A120**	39	
			1.00	I	3160	*(14000)*				1.00	I	4320	*(19200)*	8	**4A125**	39	
			1.08	I	6930	*(30800)*				1.08	I	6690	*(29800)*	8	**4B125**	39	
			2.00	III	6930	*(30800)*				2.00	III	6690	*(29800)*	8	**4B140**	39	
			2.02	III	10100	*(45100)*				2.02	III	9700	*(43200)*	8	**4C140**	39	
			2.75	III	10100	*(45100)*				2.75	III	9700	*(43200)*	8	**4C160**	39	
			2.75	III	15300	*(67900)*				2.75	III	14500	*(64600)*	8	**4D160**	39	
			2.59	III	19900	*(88700)*				2.59	III	18900	*(84200)*	8	**4E170**	39	
31.9	13400	*(1520)*	0.92	-	7120	*(31700)*	38.5	11100	*(1260)*	0.92	-	6900	*(30700)*	8	**4B120**	46	
			1.08	I	7120	*(31700)*				1.08	I	6900	*(30700)*	8	**4B125**	46	
			1.38	I	7120	*(31700)*				1.38	I	6900	*(30700)*	8	**4B140**	46	
			1.69	II	7120	*(31700)*				1.69	II	6900	*(30700)*	8	**4B160**	46	
			2.02	III	10500	*(46800)*				2.02	III	10100	*(44900)*	8	**4C160**	46	
			2.59	III	10500	*(46800)*				2.59	III	10100	*(44900)*	8	**4C170**	46	
			2.59	III	15900	*(70900)*				2.59	III	15200	*(67500)*	8	**4D170**	46	
			2.59	III	20800	*(92700)*				2.59	III	19800	*(88100)*	8	**4E170**	46	
27.6	15500	*(1750)*	0.92	-	7280	*(32400)*	33.3	12900	*(1450)*	0.92	-	7070	*(31500)*	8	**4B120**	53	
			1.08	I	7280	*(32400)*				1.08	I	7070	*(31500)*	8	**4B125**	53	
			1.38	I	7280	*(32400)*				1.38	I	7070	*(31500)*	8	**4B140**	53	
			1.47	II	7280	*(32400)*				1.47	II	7070	*(31500)*	8	**4B160**	53	
			2.02	III	10800	*(48200)*				2.02	III	10400	*(46300)*	8	**4C160**	53	
			2.18	III	10800	*(48200)*				2.18	III	10400	*(46300)*	8	**4C170**	53	(-)
			2.18	III	16500	*(73400)*				2.18	III	15700	*(70100)*	8	**4D170**	53	(-)
			2.59	III	16500	*(73400)*				2.59	III	15700	*(70100)*	8	**4D180**	53	
			2.59	III	21700	*(96300)*				2.59	III	20600	*(91600)*	8	**4E180**	53	
			2.59	III	31500	*(140000)*				2.59	III	31600	*(141000)*	8	**4F180**	53	

Notes: [1] For double reduction and 1/8 HP single reduction Y4 ratings, refer to selection tables on pages 2.91 thru 2.130.
[2] Variable Frequency Drive (VFD) notes (see page 2.8 for Constant Torque Speed Ranges):

Y4 Mounting Single Reduction Selection Tables

7.5 HP (5.5 kW)

Y4 Mounting Position[1]:

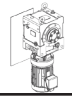

Dimension Pages:

Single Reduction	2.132-2.143
Single Reduction,Y2	2.144
Double Reduction	2.146-2.161
Double Reduction, Y2	2.162

Frequency	50 Hz	60 Hz
Input Speed	1450 RPM	1750 RPM
Number of Poles	4	

50Hz							60 Hz							Selection			
Output Speed (RPM)	Output Torque		Service Factor		Solid Shaft Overhung Load		Output Speed (RPM)	Output Torque		Service Factor[1]		Solid Shaft Overhung Load		Base			VFD[1]
	in•lbs	(N•m)	SF	AGMA Class	lbs	(N)		in•lbs	(N•m)	SF	AGMA Class	lbs	(N)	Motor Power Code	Frame Size	Ratio	
24.4	17600	(1990)	0.89	-	7400	(32900)	29.4	14600	(1650)	0.92	-	7210	(32100)	8	**4B120**	60	
			1.03	I	7400	(32900)				1.03	I	7210	(32100)	8	**4B125**	60	
			1.29	I	7400	(32900)				1.29	I	7210	(32100)	8	**4B160**	60	
			2.02	III	11100	(49400)				2.02	III	10700	(47600)	8	**4C160**	60	
			2.02	III	17000	(75700)				2.02	III	16300	(72300)	8	**4D160**	60	
			2.59	III	17000	(75700)				2.59	III	16300	(72300)	8	**4D180**	60	
			2.59	III	22400	(99500)				2.59	III	21300	(94700)	8	**4E180**	60	
			2.59	III	31400	(140000)				2.59	III	31500	(140000)	8	**4F180**	60	
21.6	19900	(2240)	0.87	-	6990	(31100)	26.0	16500	(1860)	0.89	-	7330	(32600)	8	**4B125**	67	
			1.01	I	6990	(31100)				1.01	I	7330	(32600)	8	**4B140**	67	
			1.15	I	6990	(31100)				1.15	I	7330	(32600)	8	**4B160**	67	
			1.38	I	11400	(50600)				1.38	I	11000	(48800)	8	**4C160**	67	
			1.77	II	11400	(50600)				1.77	II	11000	(48800)	8	**4C170**	67	
			1.77	II	17500	(77900)				1.77	II	16700	(74500)	8	**4D170**	67	
			2.59	III	17500	(77900)				2.59	III	16700	(74500)	8	**4D180**	67	
			2.59	III	22800	(101000)				2.59	III	22000	(97800)	8	**4E180**	67	
			2.59	III	31300	(139000)				2.59	III	31500	(140000)	8	**4F180**	67	
19.7	21700	(2450)	0.87	-	6220	(27700)	23.8	18000	(2030)	0.89	-	7420	(33000)	8	**4B125**	74	
			1.01	I	6220	(27700)				1.01	I	7420	(33000)	8	**4B140**	74	
			1.05	I	6220	(27700)				1.05	I	7420	(33000)	8	**4B160**	74	
			1.38	I	11600	(51400)				1.38	I	11200	(49600)	8	**4C160**	74	
			1.77	II	11600	(51400)				1.77	II	11200	(49600)	8	**4C170**	74	
			1.77	II	17900	(79600)				1.77	II	17100	(76100)	8	**4D170**	74	
			2.59	III	17900	(79600)				2.59	III	17100	(76100)	8	**4D180**	74	
			2.59	III	22700	(101000)				2.59	III	22500	(100000)	8	**4E180**	74	
			2.59	III	31200	(139000)				2.59	III	31400	(140000)	8	**4F180**	74	
18.1	23600	(2670)	0.96	-	5220	(23200)	21.9	19600	(2210)	0.96	-	7090	(31600)	8	**4B140**	80	
			1.01	I	11700	(52100)				1.01	I	11300	(50400)	8	**4C140**	80	
			1.38	I	11700	(52100)				1.38	I	11300	(50400)	8	**4C160**	80	
			1.92	II	11700	(52100)				1.92	II	11300	(50400)	8	**4C170**	80	
			2.02	III	18200	(81200)				2.02	III	17500	(77700)	8	**4D170**	80	
			2.18	III	18200	(81200)				2.18	III	17500	(77700)	8	**4D180**	80	
			2.18	III	22600	(101000)				2.18	III	22800	(101000)	8	**4E180**	80	
			2.59	III	22600	(101000)				2.59	III	22800	(101000)	8	**4E190**	80	
			2.59	III	31100	(139000)				2.59	III	31300	(139000)	8	**4F190**	80	

Notes: [1] For double reduction and 1/8 HP single reduction Y4 ratings, refer to selection tables on pages 2.91 thru 2.130.
[2] Variable Frequency Drive (VFD) notes (see page 2.8 for Constant Torque Speed Ranges):

Y4 Mounting Single Reduction Selection Tables

7.5 HP (5.5 kW)

Y4 Mounting Position[1]:

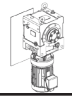

Dimension Pages:

Single Reduction	2.132-2.143
Single Reduction,Y2	2.144
Double Reduction	2.146-2.161
Double Reduction, Y2	2.162

Frequency	50 Hz	60 Hz
Input Speed	1450 RPM	1750 RPM
Number of Poles	4	

50Hz							60 Hz							Selection			
Output Speed (RPM)	Output Torque		Service Factor		Solid Shaft Overhung Load		Output Speed (RPM)	Output Torque		Service Factor[1]		Solid Shaft Overhung Load		Base			VFD[1]
	in•lbs	*(N•m)*	SF	AGMA Class	lbs	*(N)*		in•lbs	*(N•m)*	SF	AGMA Class	lbs	*(N)*	Motor Power Code	Frame Size	Ratio	
16.6	25900	*(2920)*	0.88	-	3570	*(15900)*	20.0	21400	*(2420)*	0.88	-	6350	*(28300)*	8	**4B140**	88	
			1.01	I	11900	*(52900)*				1.01	I	11500	*(51300)*	8	**4C140**	88	
			1.38	I	11900	*(52900)*				1.38	I	11500	*(51300)*	8	**4C160**	88	
			1.76	II	11900	*(52900)*				1.76	II	11500	*(51300)*	8	**4C170**	88	
			2.02	III	18600	*(82800)*				2.02	III	17800	*(79300)*	8	**4D170**	88	
			2.18	III	18600	*(82800)*				2.18	III	17800	*(79300)*	8	**4D180**	88	
			2.18	III	22500	*(100000)*				2.18	III	22700	*(101000)*	8	**4E180**	88	
			2.59	III	22500	*(100000)*				2.59	III	22700	*(101000)*	8	**4E190**	88	
			2.59	III	31000	*(138000)*				2.59	III	31200	*(139000)*	8	**4F190**	88	
14.3	30000	*(3390)*	1.38	I	12200	*(54000)*	17.2	24900	*(2810)*	1.38	I	11800	*(52600)*	8	**4C160**	102	
			1.52	II	12200	*(54000)*				1.52	II	11800	*(52600)*	8	**4C170**	102	
			2.02	III	19200	*(85500)*				2.02	III	18500	*(82100)*	8	**4D170**	102	
			2.02	III	22300	*(99100)*				2.02	III	22500	*(100000)*	8	**4E170**	102	
			2.59	III	22300	*(99100)*				2.59	III	22500	*(100000)*	8	**4E190**	102	
			2.59	III	30900	*(137000)*				2.59	III	31100	*(138000)*	8	**4F190**	102	
12.9	33100	*(3740)*	1.37	I	12300	*(54700)*	15.6	27400	*(3100)*	1.37	I	12000	*(53300)*	8	**4C160**	112	
			1.38	I	19600	*(87300)*				1.38	I	18900	*(83900)*	8	**4D160**	112	
			1.77	II	19600	*(87300)*				1.77	II	18900	*(83900)*	8	**4D180**	112	(-)
			1.77	II	22100	*(98400)*				1.77	II	22400	*(99700)*	8	**4E180**	112	(-)
			2.18	III	22100	*(98400)*				2.18	III	22400	*(99700)*	8	**4E190**	112	
			2.18	III	30700	*(137000)*				2.18	III	31000	*(138000)*	8	**4F190**	112	
11.8	36200	*(4090)*	1.26	I	12300	*(54800)*	14.3	30000	*(3390)*	1.26	I	12200	*(54000)*	8	**4C160**	123	
			1.38	I	20000	*(88900)*				1.38	I	19200	*(85500)*	8	**4D160**	123	
			1.77	II	20000	*(88900)*				1.77	II	19200	*(85500)*	8	**4D180**	123	(-)
			1.77	II	22000	*(97700)*				1.77	II	22300	*(99100)*	8	**4E180**	123	(-)
			2.18	III	22000	*(97700)*				2.18	III	22300	*(99100)*	8	**4E190**	123	
			2.18	III	30600	*(136000)*				2.18	III	30900	*(137000)*	8	**4F190**	123	
9.63	44500	*(5030)*	1.02	I	9820	*(43700)*	11.6	36900	*(4160)*	1.02	I	12200	*(54100)*	8	**4C170**	151	
			1.38	I	19200	*(85500)*				1.38	I	20100	*(89200)*	8	**4D170**	151	
			1.38	I	21600	*(95900)*				1.38	I	21900	*(97600)*	8	**4E170**	151	
			1.77	II	21600	*(95900)*				1.77	II	21900	*(97600)*	8	**4E190**	151	
			1.77	II	30200	*(135000)*				1.77	II	30600	*(136000)*	8	**4F190**	151	
8.12	52800	*(5960)*	0.86	-	5440	*(24200)*	9.80	43700	*(4940)*	0.86	-	10100	*(44900)*	8	**4C170**	179	
			1.01	I	17900	*(79700)*				1.01	I	19300	*(86000)*	8	**4D170**	179	
			1.01	I	21100	*(94000)*				1.01	I	21600	*(96000)*	8	**4E170**	179	
			1.29	I	21100	*(94000)*				1.29	I	21600	*(96000)*	8	**4E190**	179	
			1.29	I	29900	*(133000)*				1.29	I	30300	*(135000)*	8	**4F190**	179	

Notes: [1] For double reduction and 1/8 HP single reduction Y4 ratings, refer to selection tables on pages 2.91 thru 2.130.
[2] Variable Frequency Drive (VFD) notes (see page 2.8 for Constant Torque Speed Ranges):

Y4 Mounting Single Reduction Selection Tables

7.5 HP (5.5 kW)

Y4 Mounting Position[1]:

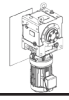

Dimension Pages:

Single Reduction	2.132-2.143
Single Reduction,Y2	2.144
Double Reduction	2.146-2.161
Double Reduction, Y2	2.162

Frequency	50 Hz	60 Hz
Input Speed	1450 RPM	1750 RPM
Number of Poles	4	

50Hz							60 Hz							Selection			
Output Speed (RPM)	Output Torque		Service Factor		Solid Shaft Overhung Load		Output Speed (RPM)	Output Torque		Service Factor[1]		Solid Shaft Overhung Load		Base			VFD[1]
	in•lbs	(N•m)	SF	AGMA Class	lbs	(N)		in•lbs	(N•m)	SF	AGMA Class	lbs	(N)	Motor Power Code	Frame Size	Ratio	
7.02	61000	(6900)	1.01	I	16300	(72300)	8.47	50600	(5710)	1.01	I	18300	(81400)	8	**4D170**	207	
			1.26	I	16300	(72300)				1.38	I	18300	(81400)	8	**4D180**	207	
			1.38	I	20700	(92100)				1.38	I	21200	(94500)	8	**4E180**	207	
			1.38	I	29500	(131000)				1.38	I	30000	(133000)	8	**4F180**	207	
5.84	73500	(8300)	1.01	I	12800	(56900)	7.04	60900	(6880)	1.01	I	16300	(72500)	8	**4D180**	249	
			1.01	I	20100	(89300)				1.01	I	20700	(92200)	8	**4E180**	249	
			1.01	I	29000	(129000)				1.01	I	29500	(131000)	8	**4F180**	249	
4.76	90000	(10200)	0.86	-	272	(1210)	5.75	74600	(8430)	1.01	I	12400	(55100)	8	**4D180**	305	
			1.01	I	19200	(85600)				1.01	I	20000	(89100)	8	**4E180**	305	
			1.01	I	28300	(126000)				1.01	I	28900	(129000)	8	**4F180**	305	

Sold & Serviced By:
ELECTROMATE
Toll Free Phone (877) SERV098
www.electromate.com
sales@electromate.com

Notes: [1] For double reduction and 1/8 HP single reduction Y4 ratings, refer to selection tables on pages 2.91 thru 2.130.
[2] Variable Frequency Drive (VFD) notes (see page 2.8 for Constant Torque Speed Ranges):

Y4 Mounting Single Reduction Selection Tables

10 HP (7.5 kW)

Y4 Mounting Position[1]:

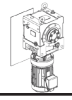

Dimension Pages:

Single Reduction	2.132-2.143
Single Reduction,Y2	2.144
Double Reduction	2.146-2.161
Double Reduction, Y2	2.162

Frequency	50 Hz	60 Hz
Input Speed	1450 RPM	1750 RPM
Number of Poles	4	

50Hz							60 Hz							Selection			
Output Speed (RPM)	Output Torque		Service Factor		Solid Shaft Overhung Load		Output Speed (RPM)	Output Torque		Service Factor[1]		Solid Shaft Overhung Load		Base			VFD[1]
	in•lbs	*(N•m)*	SF	AGMA Class	lbs	*(N)*		in•lbs	*(N•m)*	SF	AGMA Class	lbs	*(N)*	Motor Power Code	Frame Size	Ratio	
69.0	8470	*(956)*	1.35	I	3880	*(17300)*	83.3	7010	*(792)*	1.35	I	3800	*(16900)*	10	**4A140**	21	
			1.48	II	5890	*(26200)*				1.48	II	5670	*(25200)*	10	**4B140**	21	
			1.48	II	8540	*(38000)*				1.48	II	8170	*(36300)*	10	**4C140**	21	
64.7	9030	*(1020)*	1.26	I	3900	*(17400)*	78.1	7480	*(845)*	1.26	I	3830	*(17000)*	10	**4A140**	22	
			1.48	II	5960	*(26500)*				1.48	II	5740	*(25600)*	10	**4B140**	22	
			2.02	III	5960	*(26500)*				2.02	III	5740	*(25600)*	10	**4B160**	22	
			2.02	III	8670	*(38600)*				2.02	III	8300	*(36900)*	10	**4C160**	22	
			2.02	III	13000	*(57900)*				2.02	III	12400	*(55100)*	10	**4D160**	22	
59.2	9880	*(1120)*	1.16	I	3930	*(17500)*	71.4	8180	*(925)*	1.16	I	3870	*(17200)*	10	**4A140**	25	
			1.48	II	6060	*(26900)*				1.48	II	5850	*(26000)*	10	**4B140**	25	
			2.02	III	6060	*(26900)*				2.02	III	5850	*(26000)*	10	**4B160**	25	
			2.02	III	8850	*(39400)*				2.02	III	8480	*(37700)*	10	**4C160**	25	
			2.02	III	13300	*(59300)*				2.02	III	12700	*(56500)*	10	**4D160**	25	
51.8	11300	*(1280)*	1.01	I	3230	*(14400)*	62.5	9350	*(1060)*	1.01	I	3910	*(17400)*	10	**4A140**	28	
			1.48	II	6200	*(27600)*				1.48	II	6000	*(26700)*	10	**4B140**	28	
			2.02	III	6200	*(27600)*				2.02	III	6000	*(26700)*	10	**4B160**	28	
			2.02	III	9120	*(40600)*				2.02	III	8740	*(38900)*	10	**4C160**	28	
			2.02	III	13800	*(61400)*				2.02	III	13100	*(58500)*	10	**4D160**	28	
41.2	14200	*(1600)*	1.48	II	6410	*(28500)*	49.7	11800	*(1330)*	1.48	II	6230	*(27700)*	10	**4B140**	35	
			1.60	II	6410	*(28500)*				1.60	II	6230	*(27700)*	10	**4B160**	35	
			2.02	III	9570	*(42600)*				2.02	III	9200	*(40900)*	10	**4C160**	35	
			2.02	III	14600	*(65000)*				2.02	III	13900	*(62000)*	10	**4D160**	35	
			2.59	III	14600	*(65000)*				2.59	III	13900	*(62000)*	10	**4D180**	35	
			2.59	III	19200	*(85300)*				2.59	III	18200	*(81100)*	10	**4E180**	35	
			3.19	III	19200	*(85300)*				3.19	III	18200	*(81100)*	10	**4E190**	35	
			3.19	III	31600	*(140000)*				3.19	III	30800	*(137000)*	10	**4F190**	35	
37.7	15500	*(1750)*	1.47	II	6480	*(28800)*	45.5	12900	*(1450)*	1.47	II	6320	*(28100)*	10	**4B140**	39	
			1.48	II	9740	*(43300)*				1.48	II	9380	*(41700)*	10	**4C140**	39	
			2.02	III	9740	*(43300)*				2.02	III	9380	*(41700)*	10	**4C160**	39	
			2.02	III	14900	*(66400)*				2.02	III	14300	*(63400)*	10	**4D160**	39	
			2.59	III	14900	*(66400)*				2.59	III	14300	*(63400)*	10	**4D180**	39	
			2.59	III	19600	*(87300)*				2.59	III	18700	*(83100)*	10	**4E180**	39	
			3.19	III	19600	*(87300)*				3.19	III	18700	*(83100)*	10	**4E190**	39	
			3.19	III	31500	*(140000)*				3.19	III	31600	*(141000)*	10	**4F190**	39	

Notes: [1] For double reduction and 1/8 HP single reduction Y4 ratings, refer to selection tables on pages 2.91 thru 2.130.
[2] Variable Frequency Drive (VFD) notes (see page 2.8 for Constant Torque Speed Ranges):

Y4 Mounting Single Reduction Selection Tables

10 HP (7.5 kW)

Y4 Mounting Position[1]:

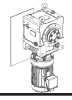

Dimension Pages:

Single Reduction	2.132-2.143
Single Reduction,Y2	2.144
Double Reduction	2.146-2.161
Double Reduction, Y2	2.162

Frequency	50 Hz	60 Hz
Input Speed	1450 RPM	1750 RPM
Number of Poles	4	

50Hz							60 Hz							Selection			
Output Speed (RPM)	Output Torque		Service Factor		Solid Shaft Overhung Load		Output Speed (RPM)	Output Torque		Service Factor[1]		Solid Shaft Overhung Load		Base			VFD[1]
	in•lbs	*(N•m)*	SF	AGMA Class	lbs	*(N)*		in•lbs	*(N•m)*	SF	AGMA Class	lbs	*(N)*	Motor Power Code	Frame Size	Ratio	
31.9	18300	*(2070)*	1.01	I	6600	*(29300)*	38.5	15200	*(1720)*	1.01	I	6470	*(28800)*	10	**4B140**	46	
			1.24	I	6600	*(29300)*				1.24	I	6470	*(28800)*	10	**4B160**	46	
			1.48	II	10000	*(44700)*				1.48	II	9700	*(43100)*	10	**4C160**	46	
			1.90	II	10000	*(44700)*				1.90	II	9700	*(43100)*	10	**4C170**	46	(-)
			1.90	II	15500	*(69100)*				1.90	II	14900	*(66100)*	10	**4D170**	46	(-)
			2.59	III	15500	*(69100)*				2.59	III	14900	*(66100)*	10	**4D180**	46	
			2.59	III	20500	*(91100)*				2.59	III	19500	*(86800)*	10	**4E180**	46	
			3.19	III	20500	*(91100)*				3.19	III	19500	*(86800)*	10	**4E190**	46	
			3.19	III	31400	*(140000)*				3.19	III	31500	*(140000)*	10	**4F190**	46	
27.6	21200	*(2390)*	1.01	I	6470	*(28800)*	33.3	17500	*(1980)*	1.01	I	6570	*(29200)*	10	**4B140**	53	
			1.07	I	6470	*(28800)*				1.07	I	6570	*(29200)*	10	**4B160**	53	
			1.48	II	10300	*(45800)*				1.48	II	9970	*(44300)*	10	**4C160**	53	
			1.60	II	10300	*(45800)*				1.60	II	9970	*(44300)*	10	**4C170**	53	
			1.60	II	16100	*(71400)*				1.60	II	15400	*(68400)*	10	**4D170**	53	
			1.90	II	16100	*(71400)*				1.90	II	15400	*(68400)*	10	**4D180**	53	
			1.90	II	21200	*(94500)*				1.90	II	20300	*(90100)*	10	**4E180**	53	
			3.19	III	21200	*(94500)*				3.19	III	20300	*(90100)*	10	**4E190**	53	
			3.19	III	31300	*(139000)*				3.19	III	31400	*(140000)*	10	**4F190**	53	
24.4	24000	*(2710)*	0.95	-	5010	*(22300)*	29.4	19900	*(2250)*	0.95	-	6640	*(29500)*	10	**4B160**	60	
			1.48	II	10500	*(46700)*				1.48	II	10200	*(45300)*	10	**4C160**	60	
			1.48	II	16500	*(73400)*				1.48	II	15800	*(70400)*	10	**4D160**	60	
			1.90	II	16500	*(73400)*				1.90	II	15800	*(70400)*	10	**4D180**	60	
			1.90	II	21900	*(97400)*				1.90	II	20900	*(93000)*	10	**4E180**	60	
			3.19	III	21900	*(97400)*				3.19	III	20900	*(93000)*	10	**4E190**	60	
			3.19	III	31100	*(138000)*				3.19	III	31300	*(139000)*	10	**4F190**	60	
21.6	27100	*(3060)*	0.84	-	2050	*(9110)*	26.0	22400	*(2540)*	0.84	-	5880	*(26100)*	10	**4B160**	67	
			1.01	I	10700	*(47500)*				1.01	I	10400	*(46200)*	10	**4C160**	67	
			1.29	I	10700	*(47500)*				1.29	I	10400	*(46200)*	10	**4C170**	67	
			1.29	I	16900	*(75400)*				1.29	I	16300	*(72400)*	10	**4D170**	67	
			1.90	II	16900	*(75400)*				1.90	II	16300	*(72400)*	10	**4D180**	67	(-)
			1.90	II	22400	*(99800)*				1.90	II	21500	*(95800)*	10	**4E180**	67	(-)
			1.90	II	31000	*(138000)*				1.90	II	31200	*(139000)*	10	**4F180**	67	(-)
19.7	29600	*(3350)*	1.01	I	10800	*(48100)*	23.8	24500	*(2770)*	1.01	I	10500	*(46900)*	10	**4C160**	74	
			1.29	I	10800	*(48100)*				1.29	I	10500	*(46900)*	10	**4C170**	74	
			1.29	I	17300	*(76800)*				1.29	I	16600	*(73800)*	10	**4D170**	74	
			1.90	II	17300	*(76800)*				1.90	II	16600	*(73800)*	10	**4D180**	74	(-)
			1.90	II	22300	*(99200)*				1.90	II	22000	*(98000)*	10	**4E180**	74	(-)
			1.90	II	30900	*(137000)*				1.90	II	31100	*(138000)*	10	**4F180**	74	(-)

Notes: [1] For double reduction and 1/8 HP single reduction Y4 ratings, refer to selection tables on pages 2.91 thru 2.130.
[2] Variable Frequency Drive (VFD) notes (see page 2.8 for Constant Torque Speed Ranges):

(-) = For inverter operation, starting conditions may require ambient temperature of 5° C or higher.

Y4 Mounting Single Reduction Selection Tables

10 HP (7.5 kW)

Y4 Mounting Position[1]:

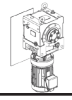

Dimension Pages:

Single Reduction	2.132-2.143
Single Reduction,Y2	2.144
Double Reduction	2.146-2.161
Double Reduction, Y2	2.162

Frequency	50 Hz	60 Hz
Input Speed	1450 RPM	1750 RPM
Number of Poles	4	

50Hz							60 Hz							Selection			
Output Speed (RPM)	Output Torque		Service Factor		Solid Shaft Overhung Load		Output Speed (RPM)	Output Torque		Service Factor[1]		Solid Shaft Overhung Load		Base			VFD[1]
	in•lbs	*(N•m)*	SF	AGMA Class	lbs	*(N)*		in•lbs	*(N•m)*	SF	AGMA Class	lbs	*(N)*	Motor Power Code	Frame Size	Ratio	
18.1	32200	*(3640)*	1.01	I	10900	*(48500)*	21.9	26700	*(3020)*	1.01	I	10700	*(47400)*	10	**4C160**	80	
			1.41	II	10900	*(48500)*				1.41	II	10700	*(47400)*	10	**4C170**	80	
			1.48	II	17600	*(78100)*				1.48	II	16900	*(75100)*	10	**4D170**	80	
			1.60	II	17600	*(78100)*				1.60	II	16900	*(75100)*	10	**4D180**	80	(-)
			1.60	II	22200	*(98600)*				1.60	II	22500	*(99900)*	10	**4E180**	80	(-)
			1.90	II	22200	*(98600)*				1.90	II	22500	*(99900)*	10	**4E190**	80	
			1.90	II	30800	*(137000)*				1.90	II	31000	*(138000)*	10	**4F190**	80	
16.6	35300	*(3990)*	1.01	I	11000	*(48900)*	20.0	29200	*(3300)*	1.01	I	10800	*(48000)*	10	**4C160**	88	
			1.29	I	11000	*(48900)*				1.29	I	10800	*(48000)*	10	**4C170**	88	
			1.48	II	17900	*(79400)*				1.48	II	17200	*(76600)*	10	**4D170**	88	
			1.60	II	17900	*(79400)*				1.60	II	17200	*(76600)*	10	**4D180**	88	(-)
			1.60	II	22000	*(97900)*				1.60	II	22300	*(99300)*	10	**4E180**	88	(-)
			1.90	II	22000	*(97900)*				1.90	II	22300	*(99300)*	10	**4E190**	88	
			1.90	II	30600	*(136000)*				1.90	II	30900	*(137000)*	10	**4F190**	88	
14.3	40900	*(4620)*	1.01	I	11000	*(49100)*	17.2	33900	*(3830)*	1.01	I	11000	*(48700)*	10	**4C160**	102	
			1.11	I	11000	*(49100)*				1.11	I	11000	*(48700)*	10	**4C170**	102	
			1.48	II	18300	*(81600)*				1.48	II	17700	*(78800)*	10	**4D170**	102	
			1.48	II	21700	*(96700)*				1.48	II	22100	*(98300)*	10	**4E170**	102	
			1.90	II	21700	*(96700)*				1.90	II	22100	*(98300)*	10	**4E190**	102	
			1.90	II	30400	*(135000)*				1.90	II	30700	*(137000)*	10	**4F190**	102	
12.9	45100	*(5100)*	1.01	I	9560	*(42500)*	15.6	37400	*(4230)*	1.01	I	11000	*(49100)*	10	**4C160**	112	
			1.01	I	18700	*(83000)*				1.01	I	18100	*(80300)*	10	**4D160**	112	
			1.29	I	18700	*(83000)*				1.29	I	18100	*(80300)*	10	**4D180**	112	(-)
			1.29	I	21500	*(95700)*				1.29	I	21900	*(97500)*	10	**4E180**	112	(-)
			1.60	II	21500	*(95700)*				1.60	II	21900	*(97500)*	10	**4E190**	112	
			1.60	II	30200	*(134000)*				1.60	II	30600	*(136000)*	10	**4F190**	112	
11.8	49400	*(5580)*	0.92	-	7640	*(34000)*	14.3	40900	*(4620)*	0.92	-	11000	*(49100)*	10	**4C160**	123	
			1.01	I	18500	*(82200)*				1.01	I	18300	*(81600)*	10	**4D160**	123	
			1.29	I	18500	*(82200)*				1.29	I	18300	*(81600)*	10	**4D180**	123	(-)
			1.29	I	21300	*(94800)*				1.29	I	21700	*(96700)*	10	**4E180**	123	(-)
			1.60	II	21300	*(94800)*				1.60	II	21700	*(96700)*	10	**4E190**	123	
			1.60	II	30000	*(134000)*				1.60	II	30400	*(135000)*	10	**4F190**	123	
9.63	60700	*(6850)*	1.01	I	16300	*(72700)*	11.6	50300	*(5680)*	1.01	I	18300	*(81600)*	10	**4D170**	151	
			1.01	I	20700	*(92200)*				1.01	I	21300	*(94600)*	10	**4E170**	151	
			1.29	I	20700	*(92200)*				1.29	I	21300	*(94600)*	10	**4E190**	151	(-)
			1.29	I	29500	*(131000)*				1.29	I	30000	*(133000)*	10	**4F190**	151	(-)
8.12	72000	*(8130)*	0.95	-	20200	*(89700)*	9.80	59600	*(6740)*	0.95	-	20800	*(92500)*	10	**4E190**	179	(-)
			0.95	-	29100	*(129000)*				0.95	-	29600	*(132000)*	10	**4F190**	179	(-)

Notes: [1] For double reduction and 1/8 HP single reduction Y4 ratings, refer to selection tables on pages 2.91 thru 2.130.
[2] Variable Frequency Drive (VFD) notes (see page 2.8 for Constant Torque Speed Ranges):

(-) = For inverter operation, starting conditions may require ambient temperature of 5° C or higher.

Y4 Mounting Single Reduction Selection Tables

10 HP (7.5 kW)

Y4 Mounting Position[1]:

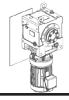

Dimension Pages:

Single Reduction	2.132-2.143
Single Reduction,Y2	2.144
Double Reduction	2.146-2.161
Double Reduction, Y2	2.162

Frequency	50 Hz	60 Hz
Input Speed	1450 RPM	1750 RPM
Number of Poles	4	

50Hz							60 Hz							Selection			
Output Speed (RPM)	Output Torque		Service Factor		Solid Shaft Overhung Load		Output Speed (RPM)	Output Torque		Service Factor[1]		Solid Shaft Overhung Load		Base			VFD[1]
	in•lbs	*(N•m)*	SF	AGMA Class	lbs	*(N)*		in•lbs	*(N•m)*	SF	AGMA Class	lbs	*(N)*	Motor Power Code	Frame Size	Ratio	
7.02	83200	*(9400)*	0.93	-	8420	*(37500)*	8.47	69000	*(7790)*	1.01	I	14200	*(63200)*	10	**4D180**	207	
			1.01	I	19600	*(87100)*				1.01	I	20300	*(90300)*	10	**4E180**	207	
			1.01	I	28600	*(127000)*				1.01	I	29200	*(130000)*	10	**4F180**	207	

Sold & Serviced By:
ELECTROMATE
Toll Free Phone (877) SERV098
www.electromate.com
sales@electromate.com

Notes: [1] For double reduction and 1/8 HP single reduction Y4 ratings, refer to selection tables on pages 2.91 thru 2.130.
[2] Variable Frequency Drive (VFD) notes (see page 2.8 for Constant Torque Speed Ranges):

Y4 Mounting Single Reduction Selection Tables

15 HP (11 kW)

Y4 Mounting Position[1]:

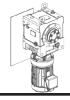

Dimension Pages:

Single Reduction	2.132-2.143
Single Reduction,Y2	2.144
Double Reduction	2.146-2.161
Double Reduction, Y2	2.162

Frequency	50 Hz	60 Hz
Input Speed	1450 RPM	1750 RPM
Number of Poles	4	

50Hz							60 Hz							Selection			
Output Speed (RPM)	Output Torque		Service Factor		Solid Shaft Overhung Load		Output Speed (RPM)	Output Torque		Service Factor[1]		Solid Shaft Overhung Load		Base			VFD[1]
	in•lbs	*(N•m)*	SF	AGMA Class	lbs	*(N)*		in•lbs	*(N•m)*	SF	AGMA Class	lbs	*(N)*	Motor Power Code	Frame Size	Ratio	
69.0	12400	*(1400)*	0.92	-	2160	*(9600)*	83.3	10300	*(1160)*	0.92	-	3350	*(14900)*	15	**4A140**	21	
			1.01	I	5460	*(24300)*				1.01	I	5320	*(23700)*	15	**4B140**	21	
			1.01	I	8170	*(36300)*				1.01	I	7860	*(35000)*	15	**4C140**	21	
64.7	13200	*(1500)*	0.86	-	290	*(1290)*	78.1	11000	*(1240)*	0.86	-	3350	*(14900)*	15	**4A140**	22	
			1.01	I	5500	*(24500)*				1.01	I	5370	*(23900)*	15	**4B140**	22	
			1.38	I	5500	*(24500)*				1.38	I	5370	*(23900)*	15	**4B160**	22	
			1.38	I	8270	*(36800)*				1.38	I	7970	*(35400)*	15	**4C160**	22	
			1.38	I	12700	*(56400)*				1.38	I	12100	*(53900)*	15	**4D160**	22	
59.2	14500	*(1640)*	1.01	I	5560	*(24700)*	71.4	12000	*(1360)*	1.01	I	5440	*(24200)*	15	**4B140**	25	
			1.38	I	5560	*(24700)*				1.38	I	5440	*(24200)*	15	**4B160**	25	
			1.38	I	8420	*(37400)*				1.38	I	8110	*(36100)*	15	**4C160**	25	
			1.38	I	13000	*(57700)*				1.38	I	12400	*(55100)*	15	**4D160**	25	
51.8	16600	*(1870)*	1.01	I	5630	*(25000)*	62.5	13700	*(1550)*	1.01	I	5530	*(24600)*	15	**4B140**	28	
			1.37	I	5630	*(25000)*				1.37	I	5530	*(24600)*	15	**4B160**	28	
			1.38	I	8620	*(38300)*				1.38	I	8330	*(37100)*	15	**4C160**	28	
			1.38	I	13400	*(59500)*				1.38	I	12800	*(56900)*	15	**4D160**	28	
41.2	20800	*(2350)*	1.01	I	5690	*(25300)*	49.7	17200	*(1950)*	1.01	I	5640	*(25100)*	15	**4B140**	35	
			1.09	I	5690	*(25300)*				1.09	I	5640	*(25100)*	15	**4B160**	35	
			1.38	I	8940	*(39800)*				1.38	I	8680	*(38600)*	15	**4C160**	35	
			1.38	I	14100	*(62600)*				1.38	I	13500	*(60000)*	15	**4D160**	35	
			1.77	II	14100	*(62600)*				1.77	II	13500	*(60000)*	15	**4D180**	35	
			1.77	II	18700	*(83100)*				1.77	II	17800	*(79400)*	15	**4E180**	35	
			2.18	III	18700	*(83100)*				2.18	III	17800	*(79400)*	15	**4E190**	35	
			2.18	III	31300	*(139000)*				2.18	III	30500	*(135000)*	15	**4F190**	35	
37.7	22800	*(2570)*	1.00	I	5700	*(25400)*	45.5	18900	*(2130)*	1.00	I	5670	*(25200)*	15	**4B140**	39	
			1.01	I	9050	*(40300)*				1.01	I	8810	*(39200)*	15	**4C140**	39	
			1.38	I	9050	*(40300)*				1.38	I	8810	*(39200)*	15	**4C160**	39	
			1.38	I	14300	*(63800)*				1.38	I	13800	*(61300)*	15	**4D160**	39	
			1.77	II	14300	*(63800)*				1.77	II	13800	*(61300)*	15	**4D180**	39	
			1.77	II	19100	*(84900)*				1.77	II	18200	*(81100)*	15	**4E180**	39	
			2.18	III	19100	*(84900)*				2.18	III	18200	*(81100)*	15	**4E190**	39	
			2.18	III	31200	*(139000)*				2.18	III	31200	*(139000)*	15	**4F190**	39	

Notes: [1] For double reduction and 1/8 HP single reduction Y4 ratings, refer to selection tables on pages 2.91 thru 2.130.
[2] Variable Frequency Drive (VFD) notes (see page 2.8 for Constant Torque Speed Ranges):

Y4 Mounting Single Reduction Selection Tables

15 HP (11 kW)

Y4 Mounting Position[1]:

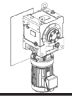

Dimension Pages:

Single Reduction	2.132-2.143
Single Reduction,Y2	2.144
Double Reduction	2.146-2.161
Double Reduction, Y2	2.162

Frequency	50 Hz	60 Hz
Input Speed	1450 RPM	1750 RPM
Number of Poles	4	

50Hz							60 Hz							Selection			
Output Speed (RPM)	Output Torque		Service Factor		Solid Shaft Overhung Load		Output Speed (RPM)	Output Torque		Service Factor[1]		Solid Shaft Overhung Load		Base			VFD[1]
	in•lbs	*(N•m)*	SF	AGMA Class	lbs	*(N)*		in•lbs	*(N•m)*	SF	AGMA Class	lbs	*(N)*	Motor Power Code	Frame Size	Ratio	
31.9	26900	*(3040)*	0.85	-	2350	*(10500)*	38.5	22300	*(2520)*	0.85	-	5700	*(25400)*	15	**4B160**	46	
			1.01	I	9240	*(41100)*				1.01	I	9030	*(40200)*	15	**4C160**	46	
			1.29	I	9240	*(41100)*				1.29	I	9030	*(40200)*	15	**4C170**	46	(-)
			1.29	I	14800	*(66000)*				1.29	I	14300	*(63500)*	15	**4D170**	46	(-)
			1.77	II	14800	*(66000)*				1.77	II	14300	*(63500)*	15	**4D180**	46	
			1.77	II	19900	*(88300)*				1.77	II	19000	*(84500)*	15	**4E180**	46	
			2.18	III	19900	*(88300)*				2.18	III	19000	*(84500)*	15	**4E190**	46	
			2.18	III	31000	*(138000)*				2.18	III	31200	*(139000)*	15	**4F190**	46	
27.6	31000	*(3510)*	1.01	I	9360	*(41600)*	33.3	25700	*(2910)*	1.01	I	9190	*(40900)*	15	**4C160**	53	
			1.09	I	9360	*(41600)*				1.09	I	9190	*(40900)*	15	**4C170**	53	
			1.09	I	15300	*(67900)*				1.09	I	14700	*(65500)*	15	**4D170**	53	
			1.29	I	15300	*(67900)*				1.29	I	14700	*(65500)*	15	**4D180**	53	
			1.29	I	20500	*(91200)*				1.29	I	19700	*(87400)*	15	**4E180**	53	
			2.18	III	20500	*(91200)*				2.18	III	19700	*(87400)*	15	**4E190**	53	
			2.18	III	30800	*(137000)*				2.18	III	31100	*(138000)*	15	**4F190**	53	
24.4	35200	*(3970)*	1.01	I	9440	*(42000)*	29.4	29100	*(3290)*	1.01	I	9310	*(41400)*	15	**4C160**	60	
			1.01	I	15600	*(69400)*				1.01	I	15100	*(67100)*	15	**4D160**	60	
			1.29	I	15600	*(69400)*				1.29	I	15100	*(67100)*	15	**4D180**	60	(-)
			1.29	I	21100	*(93800)*				1.29	I	20200	*(90000)*	15	**4E180**	60	(-)
			2.18	III	21100	*(93800)*				2.18	III	20200	*(90000)*	15	**4E190**	60	
			2.18	III	30600	*(136000)*				2.18	III	30900	*(137000)*	15	**4F190**	60	
21.6	39700	*(4490)*	0.88	-	9480	*(42200)*	26.0	32900	*(3720)*	0.88	-	9400	*(41800)*	15	**4C170**	67	
			0.88	-	15900	*(70800)*				0.88	-	15400	*(68600)*	15	**4D170**	67	
			1.29	I	15900	*(70800)*				1.29	I	15400	*(68600)*	15	**4D180**	67	(-)
			1.29	I	21600	*(96200)*				1.29	I	20800	*(92400)*	15	**4E180**	67	(-)
			1.29	I	30500	*(135000)*				1.29	I	30700	*(137000)*	15	**4F180**	67	(-)
19.7	43500	*(4910)*	0.88	-	9490	*(42200)*	23.8	36000	*(4070)*	0.88	-	9450	*(42000)*	15	**4C170**	74	
			0.88	-	16100	*(71800)*				0.88	-	15700	*(69700)*	15	**4D170**	74	
			1.29	I	16100	*(71800)*				1.29	I	15700	*(69700)*	15	**4D180**	74	(-)
			1.29	I	21600	*(96100)*				1.29	I	21200	*(94200)*	15	**4E180**	74	(-)
			1.29	I	30300	*(135000)*				1.29	I	30600	*(136000)*	15	**4F180**	74	(-)
18.1	47300	*(5340)*	0.96	-	8660	*(38500)*	21.9	39200	*(4430)*	0.96	-	9480	*(42200)*	15	**4C170**	80	
			1.01	I	16300	*(72700)*				1.01	I	15900	*(70700)*	15	**4D170**	80	
			1.09	I	16300	*(72700)*				1.09	I	15900	*(70700)*	15	**4D180**	80	
			1.09	I	21400	*(95200)*				1.09	I	21600	*(95900)*	15	**4E180**	80	
			1.29	I	21400	*(95200)*				1.29	I	21600	*(95900)*	15	**4E190**	80	
			1.29	I	30100	*(134000)*				1.29	I	30500	*(136000)*	15	**4F190**	80	

Notes: [1] For double reduction and 1/8 HP single reduction Y4 ratings, refer to selection tables on pages 2.91 thru 2.130.
[2] Variable Frequency Drive (VFD) notes (see page 2.8 for Constant Torque Speed Ranges):

Y4 Mounting Single Reduction Selection Tables

15 HP (11 kW)

Y4 Mounting Position[1]:

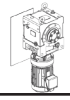

Dimension Pages:

Single Reduction	2.132-2.143
Single Reduction,Y2	2.144
Double Reduction	2.146-2.161
Double Reduction, Y2	2.162

Frequency	50 Hz	60 Hz
Input Speed	1450 RPM	1750 RPM
Number of Poles	4	

50Hz							60 Hz							Selection			
Output Speed (RPM)	Output Torque		Service Factor		Solid Shaft Overhung Load		Output Speed (RPM)	Output Torque		Service Factor[1]		Solid Shaft Overhung Load		Base			VFD[1]
	in•lbs	(N•m)	SF	AGMA Class	lbs	(N)		in•lbs	(N•m)	SF	AGMA Class	lbs	(N)	Motor Power Code	Frame Size	Ratio	
16.6	51700	(5840)	0.88	-	6210	(27600)	20.0	42900	(4840)	0.88	-	9490	(42200)	15	**4C170**	88	
			1.01	I	16500	(73600)				1.01	I	16100	(71700)	15	**4D170**	88	
			1.09	I	16500	(73600)				1.09	I	16100	(71700)	15	**4D180**	88	
			1.09	I	21200	(94200)				1.09	I	21600	(96200)	15	**4E180**	88	
			1.29	I	21200	(94200)				1.29	I	21600	(96200)	15	**4E190**	88	
			1.29	I	29900	(133000)				1.29	I	30300	(135000)	15	**4F190**	88	
14.3	60000	(6780)	1.01	I	16500	(73300)	17.2	49700	(5620)	1.01	I	16500	(73200)	15	**4D170**	102	
			1.01	I	20800	(92400)				1.01	I	21300	(94700)	15	**4E170**	102	
			1.29	I	20800	(92400)				1.29	I	21300	(94700)	15	**4E190**	102	(-)
			1.29	I	29600	(132000)				1.29	I	30000	(134000)	15	**4F190**	102	(-)
12.9	66200	(7480)	0.88	-	15000	(66600)	15.6	54900	(6200)	0.88	-	16600	(74100)	15	**4D180**	112	
			0.88	-	20400	(91000)				0.88	-	21000	(93500)	15	**4E180**	112	
			1.09	I	20400	(91000)				1.09	I	21000	(93500)	15	**4E190**	112	(-)
			1.09	I	29300	(130000)				1.09	I	29800	(133000)	15	**4F190**	112	(-)
11.8	72400	(8180)	0.88	-	13100	(58400)	14.3	60000	(6780)	0.88	-	16500	(73300)	15	**4D180**	123	
			0.88	-	20100	(89600)				0.88	-	20800	(92400)	15	**4E180**	123	
			1.09	I	20100	(89600)				1.09	I	20800	(92400)	15	**4E190**	123	(-)
			1.09	I	29000	(129000)				1.09	I	29600	(132000)	15	**4F190**	123	(-)
9.63	89000	(10100)	0.88	-	19300	(85800)	11.6	73700	(8330)	0.88	-	20100	(89300)	15	**4E190**	151	
			0.88	-	28300	(126000)				0.88	-	29000	(129000)	15	**4F190**	151	

Sold & Serviced By:
ELECTROMATE
Toll Free Phone (877) SERV098
www.electromate.com
sales@electromate.com

Notes: [1] For double reduction and 1/8 HP single reduction Y4 ratings, refer to selection tables on pages 2.91 thru 2.130.
[2] Variable Frequency Drive (VFD) notes (see page 2.8 for Constant Torque Speed Ranges):

Y4 Mounting Single Reduction Selection Tables

20 HP (15 kW)

Y4 Mounting Position[1]:

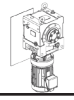

Dimension Pages:

Single Reduction	2.132-2.143
Single Reduction,Y2	2.144
Double Reduction	2.146-2.161
Double Reduction, Y2	2.162

Frequency	50 Hz	60 Hz
Input Speed	1450 RPM	1750 RPM
Number of Poles	4	

50Hz							60 Hz							Selection			
Output Speed (RPM)	Output Torque		Service Factor		Solid Shaft Overhung Load		Output Speed (RPM)	Output Torque		Service Factor[1]		Solid Shaft Overhung Load		Base			VFD[1]
	in•lbs	*(N•m)*	SF	AGMA Class	lbs	*(N)*		in•lbs	*(N•m)*	SF	AGMA Class	lbs	*(N)*	Motor Power Code	Frame Size	Ratio	
64.7	18100	*(2040)*	1.01	I	4980	*(22200)*	78.1	15000	*(1690)*	1.01	I	4940	*(22000)*	20	**4B160**	22	
			1.01	I	7820	*(34800)*				1.01	I	7590	*(33700)*	20	**4C160**	22	
			1.01	I	12300	*(54700)*				1.01	I	11800	*(52500)*	20	**4D160**	22	
59.2	19800	*(2230)*	1.01	I	4990	*(22200)*	71.4	16400	*(1850)*	1.01	I	4970	*(22100)*	20	**4B160**	25	
			1.01	I	7920	*(35200)*				1.01	I	7700	*(34300)*	20	**4C160**	25	
			1.01	I	12500	*(55800)*				1.01	I	12000	*(53500)*	20	**4D160**	25	
51.8	22600	*(2550)*	1.01	I	4980	*(22100)*	62.5	18700	*(2110)*	1.01	I	4990	*(22200)*	20	**4B160**	28	
			1.01	I	8050	*(35800)*				1.01	I	7860	*(35000)*	20	**4C160**	28	
			1.01	I	12900	*(57300)*				1.01	I	12400	*(55100)*	20	**4D160**	28	
41.2	28400	*(3210)*	1.01	I	8220	*(36600)*	49.7	23500	*(2660)*	1.01	I	8080	*(36000)*	20	**4C160**	35	
			1.01	I	13500	*(59900)*				1.01	I	13000	*(57800)*	20	**4D160**	35	
			1.29	I	13500	*(59900)*				1.29	I	13000	*(57800)*	20	**4D180**	35	(-)
			1.29	I	18100	*(80700)*				1.29	I	17400	*(77300)*	20	**4E180**	35	(-)
			1.60	II	18100	*(80700)*				1.60	II	17400	*(77300)*	20	**4E190**	35	
			1.60	II	30900	*(138000)*				1.60	II	30000	*(134000)*	20	**4F190**	35	
37.7	31000	*(3510)*	1.01	I	8270	*(36800)*	45.5	25700	*(2910)*	1.01	I	8160	*(36300)*	20	**4C160**	39	
			1.01	I	13700	*(60900)*				1.01	I	13200	*(58800)*	20	**4D160**	39	
			1.29	I	13700	*(60900)*				1.29	I	13200	*(58800)*	20	**4D180**	39	(-)
			1.29	I	18500	*(82200)*				1.29	I	17700	*(78900)*	20	**4E180**	39	(-)
			1.60	II	18500	*(82200)*				1.60	II	17700	*(78900)*	20	**4E190**	39	
			1.60	II	30800	*(137000)*				1.60	II	30800	*(137000)*	20	**4F190**	39	
31.9	36700	*(4140)*	0.95	-	8310	*(37000)*	38.5	30400	*(3430)*	0.95	-	8260	*(36700)*	20	**4C170**	46	
			0.95	-	14100	*(62500)*				0.95	-	13600	*(60600)*	20	**4D170**	46	
			1.29	I	14100	*(62500)*				1.29	I	13600	*(60600)*	20	**4D180**	46	(-)
			1.29	I	19100	*(85200)*				1.29	I	18400	*(81900)*	20	**4E180**	46	(-)
			1.60	II	19100	*(85200)*				1.60	II	18400	*(81900)*	20	**4E190**	46	
			1.60	II	30600	*(136000)*				1.60	II	30900	*(137000)*	20	**4F190**	46	
27.6	42300	*(4780)*	0.80	-	8290	*(36900)*	33.3	35100	*(3960)*	0.80	-	8300	*(36900)*	20	**4C170**	53	
			0.80	-	14400	*(63800)*				0.80	-	14000	*(62100)*	20	**4D170**	53	
			0.95	-	14400	*(63800)*				0.95	-	14000	*(62100)*	20	**4D180**	53	(-)
			0.95	-	19700	*(87600)*				0.95	-	19000	*(84400)*	20	**4E180**	53	(-)
			1.60	II	19700	*(87600)*				1.60	II	19000	*(84400)*	20	**4E190**	53	
			1.60	II	30300	*(135000)*				1.60	II	30700	*(136000)*	20	**4F190**	53	
24.4	48000	*(5420)*	0.95	-	14600	*(64800)*	29.4	39700	*(4490)*	0.95	-	14200	*(63300)*	20	**4D180**	60	
			0.95	-	20100	*(89600)*				0.95	-	19400	*(86500)*	20	**4E180**	60	
			1.60	II	20100	*(89600)*				1.60	II	19400	*(86500)*	20	**4E190**	60	
			1.60	II	30100	*(134000)*				1.60	II	30400	*(135000)*	20	**4F190**	60	

Notes: [1] For double reduction and 1/8 HP single reduction Y4 ratings, refer to selection tables on pages 2.91 thru 2.130.
[2] Variable Frequency Drive (VFD) notes (see page 2.8 for Constant Torque Speed Ranges):

Y4 Mounting Single Reduction Selection Tables

20 HP (15 kW)

Y4 Mounting Position[1]:

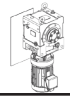

Dimension Pages:

Single Reduction	2.132-2.143
Single Reduction,Y2	2.144
Double Reduction	2.146-2.161
Double Reduction, Y2	2.162

Frequency	50 Hz	60 Hz
Input Speed	1450 RPM	1750 RPM
Number of Poles	4	

50Hz							60 Hz							Selection			
Output Speed (RPM)	Output Torque		Service Factor		Solid Shaft Overhung Load		Output Speed (RPM)	Output Torque		Service Factor[1]		Solid Shaft Overhung Load		Base			VFD[1]
	in•lbs	(N•m)	SF	AGMA Class	lbs	(N)		in•lbs	(N•m)	SF	AGMA Class	lbs	(N)	Motor Power Code	Frame Size	Ratio	
21.6	54200	(6120)	0.95	-	14800	(65700)	26.0	44900	(5070)	0.95	-	14500	(64300)	20	**4D180**	67	
			0.95	-	20600	(91500)				0.95	-	19900	(88500)	20	**4E180**	67	
			0.95	-	29800	(133000)				0.95	-	30200	(134000)	20	**4F180**	67	
19.7	59300	(6690)	0.95	-	14900	(66200)	23.8	49100	(5550)	0.95	-	14600	(65000)	20	**4D180**	74	
			0.95	-	20800	(92500)				0.95	-	20200	(90000)	20	**4E180**	74	
			0.95	-	29600	(132000)				0.95	-	30000	(134000)	20	**4F180**	74	
18.1	64500	(7290)	0.80	-	15000	(66500)	21.9	53400	(6040)	0.80	-	14700	(65600)	20	**4D180**	80	
			0.80	-	20500	(91400)				0.80	-	20500	(91300)	20	**4E180**	80	
			0.95	-	20500	(91400)				0.95	-	20500	(91300)	20	**4E190**	80	(-)
			0.95	-	29400	(131000)				0.95	-	29900	(133000)	20	**4F190**	80	(-)
16.6	70500	(7970)	0.80	-	13700	(61100)	20.0	58400	(6600)	0.80	-	14900	(66100)	20	**4D180**	88	
			0.80	-	20200	(90000)				0.80	-	20800	(92600)	20	**4E180**	88	
			0.95	-	20200	(90000)				0.95	-	20800	(92600)	20	**4E190**	88	(-)
			0.95	-	29100	(130000)				0.95	-	29600	(132000)	20	**4F190**	88	(-)
14.3	81800	(9250)	0.95	-	19700	(87400)	17.2	67800	(7660)	0.95	-	20400	(90600)	20	**4E190**	102	
			0.95	-	28600	(127000)				0.95	-	29200	(130000)	20	**4F190**	102	
12.9	90300	(10200)	0.80	-	19200	(85500)	15.6	74800	(8450)	0.80	-	20000	(89000)	20	**4E190**	112	
			0.80	-	28300	(126000)				0.80	-	28900	(129000)	20	**4F190**	112	
11.8	98800	(11200)	0.80	-	18800	(83600)	14.3	81800	(9250)	0.80	-	19700	(87400)	20	**4E190**	123	
			0.80	-	27900	(124000)				0.80	-	28600	(127000)	20	**4F190**	123	

Sold & Serviced By:
ELECTROMATE
Toll Free Phone (877) SERV098
www.electromate.com
sales@electromate.com

Notes: [1] For double reduction and 1/8 HP single reduction Y4 ratings, refer to selection tables on pages 2.91 thru 2.130.
[2] Variable Frequency Drive (VFD) notes (see page 2.8 for Constant Torque Speed Ranges):

Y4 Mounting Single Reduction Selection Tables

25 HP (18.5 kW)

Y4 Mounting Position[1]:

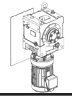

Dimension Pages:

Single Reduction	2.132-2.143
Single Reduction,Y2	2.144
Double Reduction	2.146-2.161
Double Reduction, Y2	2.162

Frequency	50 Hz	60 Hz
Input Speed	1450 RPM	1750 RPM
Number of Poles	4	

50Hz							60 Hz							Selection			
Output Speed (RPM)	Output Torque		Service Factor		Solid Shaft Overhung Load		Output Speed (RPM)	Output Torque		Service Factor[1]		Solid Shaft Overhung Load		Base			VFD[1]
	in•lbs	*(N•m)*	SF	AGMA Class	lbs	*(N)*		in•lbs	*(N•m)*	SF	AGMA Class	lbs	*(N)*	Motor Power Code	Frame Size	Ratio	
64.7	22300	*(2520)*	0.82	-	4530	*(20100)*	78.1	18500	*(2090)*	0.82	-	4560	*(20300)*	25	**4B160**	22	
			0.82	-	7420	*(33000)*				0.82	-	7260	*(32300)*	25	**4C160**	22	
			0.82	-	12000	*(53200)*				0.82	-	11500	*(51200)*	25	**4D160**	22	
59.2	24400	*(2750)*	0.82	-	4490	*(20000)*	71.4	20200	*(2280)*	0.82	-	4550	*(20300)*	25	**4B160**	25	
			0.82	-	7480	*(33300)*				0.82	-	7340	*(32600)*	25	**4C160**	25	
			0.82	-	12200	*(54100)*				0.82	-	11700	*(52200)*	25	**4D160**	25	
51.8	27800	*(3150)*	0.82	-	7550	*(33600)*	62.5	23100	*(2610)*	0.82	-	7440	*(33100)*	25	**4C160**	28	
			0.82	-	12500	*(55400)*				0.82	-	12000	*(53600)*	25	**4D160**	28	
41.2	35000	*(3950)*	0.82	-	7590	*(33800)*	49.7	29000	*(3280)*	0.82	-	7560	*(33600)*	25	**4C160**	35	
			0.82	-	12900	*(57500)*				0.82	-	12600	*(55800)*	25	**4D160**	35	
			1.05	I	12900	*(57500)*				1.05	I	12600	*(55800)*	25	**4D180**	35	
			1.05	I	17600	*(78500)*				1.05	I	17000	*(75500)*	25	**4E180**	35	
			1.29	I	17600	*(78500)*				1.29	I	17000	*(75500)*	25	**4E190**	35	(-)
			1.29	I	30700	*(136000)*				1.29	I	29700	*(132000)*	25	**4F190**	35	(-)
37.7	38300	*(4330)*	0.82	-	7580	*(33700)*	45.5	31700	*(3580)*	0.82	-	7590	*(33800)*	25	**4C160**	39	
			0.82	-	13100	*(58300)*				0.82	-	12700	*(56700)*	25	**4D160**	39	
			1.05	I	13100	*(58300)*				1.05	I	12700	*(56700)*	25	**4D180**	39	
			1.05	I	18000	*(79900)*				1.05	I	17300	*(77000)*	25	**4E180**	39	
			1.29	I	18000	*(79900)*				1.29	I	17300	*(77000)*	25	**4E190**	39	(-)
			1.29	I	30500	*(136000)*				1.29	I	30400	*(135000)*	25	**4F190**	39	(-)
31.9	45200	*(5110)*	0.77	-	7500	*(33400)*	38.5	37500	*(4240)*	0.77	-	7590	*(33800)*	25	**4C170**	46	
			0.77	-	13400	*(59500)*				0.77	-	13100	*(58100)*	25	**4D170**	46	
			1.05	I	13400	*(59500)*				1.05	I	13100	*(58100)*	25	**4D180**	46	
			1.05	I	18500	*(82400)*				1.05	I	17900	*(79600)*	25	**4E180**	46	
			1.29	I	18500	*(82400)*				1.29	I	17900	*(79600)*	25	**4E190**	46	(-)
			1.29	I	30200	*(134000)*				1.29	I	30500	*(136000)*	25	**4F190**	46	(-)
27.6	52200	*(5900)*	0.77	-	13600	*(60300)*	33.3	43300	*(4890)*	0.77	-	13300	*(59200)*	25	**4D180**	53	
			0.77	-	19000	*(84400)*				0.77	-	18400	*(81700)*	25	**4E180**	53	
			1.29	I	19000	*(84400)*				1.29	I	18400	*(81700)*	25	**4E190**	53	(-)
			1.29	I	29900	*(133000)*				1.29	I	30300	*(135000)*	25	**4F190**	53	(-)
24.4	59200	*(6680)*	0.77	-	13700	*(60800)*	29.4	49000	*(5540)*	0.77	-	13500	*(60000)*	25	**4D180**	60	
			0.77	-	19300	*(86000)*				0.77	-	18800	*(83500)*	25	**4E180**	60	
			1.29	I	19300	*(86000)*				1.29	I	18800	*(83500)*	25	**4E190**	60	(-)
			1.29	I	29600	*(132000)*				1.29	I	30000	*(134000)*	25	**4F190**	60	(-)
21.6	66800	*(7550)*	0.77	-	13700	*(61100)*	26.0	55400	*(6260)*	0.77	-	13600	*(60600)*	25	**4D180**	67	
			0.77	-	19600	*(87400)*				0.77	-	19100	*(85100)*	25	**4E180**	67	
			0.77	-	29300	*(130000)*				0.77	-	29800	*(132000)*	25	**4F180**	67	

Notes: [1] For double reduction and 1/8 HP single reduction Y4 ratings, refer to selection tables on pages 2.91 thru 2.130.
[2] Variable Frequency Drive (VFD) notes (see page 2.8 for Constant Torque Speed Ranges):

Y4 Mounting Single Reduction Selection Tables

25 HP (18.5 kW)

Y4 Mounting Position[1]:

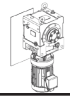

Dimension Pages:

Single Reduction	2.132-2.143
Single Reduction,Y2	2.144
Double Reduction	2.146-2.161
Double Reduction, Y2	2.162

Frequency	50 Hz	60 Hz
Input Speed	1450 RPM	1750 RPM
Number of Poles	4	

50Hz							60 Hz							Selection			
Output Speed (RPM)	Output Torque		Service Factor		Solid Shaft Overhung Load		Output Speed (RPM)	Output Torque		Service Factor[1]		Solid Shaft Overhung Load		Base			VFD[1]
	in•lbs	(N•m)	SF	AGMA Class	lbs	(N)		in•lbs	(N•m)	SF	AGMA Class	lbs	(N)	Motor Power Code	Frame Size	Ratio	
19.7	73100	(8260)	0.77	-	12900	(57400)	23.8	60600	(6840)	0.77	-	13700	(60900)	25	**4D180**	74	
			0.77	-	19900	(88300)				0.77	-	19400	(86200)	25	**4E180**	74	
			0.77	-	29000	(129000)				0.77	-	29600	(131000)	25	**4F180**	74	
18.1	79500	(8990)	0.77	-	19800	(88000)	21.9	65900	(7450)	0.77	-	19600	(87200)	25	**4E190**	80	
			0.77	-	28700	(128000)				0.77	-	29300	(130000)	25	**4F190**	80	
16.6	87000	(9830)	0.77	-	19400	(86300)	20.0	72100	(8140)	0.77	-	19800	(88200)	25	**4E190**	88	
			0.77	-	28400	(126000)				0.77	-	29100	(129000)	25	**4F190**	88	
14.3	101000	(11400)	0.77	-	18700	(83100)	17.2	83600	(9450)	0.77	-	19600	(87000)	25	**4E190**	102	
			0.77	-	27800	(124000)				0.77	-	28600	(127000)	25	**4F190**	102	

Sold & Serviced By:
ELECTROMATE
Toll Free Phone (877) SERVO98
www.electromate.com
sales@electromate.com

Notes: [1] For double reduction and 1/8 HP single reduction Y4 ratings, refer to selection tables on pages 2.91 thru 2.130.
[2] Variable Frequency Drive (VFD) notes (see page 2.8 for Constant Torque Speed Ranges):

Y4 Mounting Single Reduction Selection Tables

30 HP (22 kW)

Y4 Mounting Position[1]:

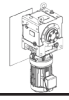

Dimension Pages:

Single Reduction	2.132-2.143
Single Reduction,Y2	2.144
Double Reduction	2.146-2.161
Double Reduction, Y2	2.162

Frequency	50 Hz	60 Hz
Input Speed	1450 RPM	1750 RPM
Number of Poles	4	

50Hz							60 Hz							Selection			
Output Speed (RPM)	Output Torque		Service Factor		Solid Shaft Overhung Load		Output Speed (RPM)	Output Torque		Service Factor[1]		Solid Shaft Overhung Load		Base			VFD[1]
	in•lbs	(N•m)	SF	AGMA Class	lbs	(N)		in•lbs	(N•m)	SF	AGMA Class	lbs	(N)	Motor Power Code	Frame Size	Ratio	
41.2	41600	(4700)	0.88	-	12400	(55200)	49.7	34500	(3900)	0.88	-	12100	(53900)	30	**4D180**	35	
			0.88	-	17200	(76300)				0.88	-	16600	(73700)	30	**4E180**	35	
			1.09	I	17200	(76300)				1.09	I	16600	(73700)	30	**4E190**	35	(-)
			1.09	I	30400	(135000)				1.09	I	29300	(130000)	30	**4F190**	35	(-)
37.7	45500	(5140)	0.88	-	12500	(55700)	45.5	37700	(4260)	0.88	-	12300	(54500)	30	**4D180**	39	
			0.88	-	17400	(77500)				0.88	-	16900	(75000)	30	**4E180**	39	
			1.09	I	17400	(77500)				1.09	I	16900	(75000)	30	**4E190**	39	(-)
			1.09	I	30200	(134000)				1.09	I	30000	(133000)	30	**4F190**	39	(-)
31.9	53800	(6080)	0.88	-	12700	(56400)	38.5	44600	(5040)	0.88	-	12500	(55600)	30	**4D180**	46	
			0.88	-	17900	(79600)				0.88	-	17400	(77200)	30	**4E180**	46	
			1.09	I	17900	(79600)				1.09	I	17400	(77200)	30	**4E190**	46	(-)
			1.09	I	29800	(133000)				1.09	I	30200	(135000)	30	**4F190**	46	(-)
27.6	62100	(7010)	1.09	I	18200	(81100)	33.3	51400	(5810)	1.09	I	17800	(79000)	30	**4E190**	53	(-)
			1.09	I	29500	(131000)				1.09	I	29900	(133000)	30	**4F190**	53	(-)
24.4	70400	(7950)	1.09	I	18500	(82300)	29.4	58300	(6590)	1.09	I	18100	(80500)	30	**4E190**	60	(-)
			1.09	I	29100	(130000)				1.09	I	29600	(132000)	30	**4F190**	60	(-)

Sold & Serviced By:
ELECTROMATE
Toll Free Phone (877) SERVO98
www.electromate.com
sales@electromate.com

Notes: [1] For double reduction and 1/8 HP single reduction Y4 ratings, refer to selection tables on pages 2.91 thru 2.130.
[2] Variable Frequency Drive (VFD) notes (see page 2.8 for Constant Torque Speed Ranges):

Y4 Mounting Single Reduction Selection Tables

40 HP (30 kW)

Y4 Mounting Position[1]:

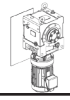

Dimension Pages:

Single Reduction	2.132-2.143
Single Reduction,Y2	2.144
Double Reduction	2.146-2.161
Double Reduction, Y2	2.162

Frequency	50 Hz	60 Hz
Input Speed	1450 RPM	1750 RPM
Number of Poles	4	

50Hz							60 Hz							Selection			
Output Speed (RPM)	Output Torque		Service Factor		Solid Shaft Overhung Load		Output Speed (RPM)	Output Torque		Service Factor[1]		Solid Shaft Overhung Load		Base			VFD[1]
	in•lbs	(N•m)	SF	AGMA Class	lbs	(N)		in•lbs	(N•m)	SF	AGMA Class	lbs	(N)	Motor Power Code	Frame Size	Ratio	
41.2	56800	(6410)	0.80	-	16000	(71400)	49.7	47000	(5310)	0.80	-	15700	(69600)	40	**4E190**	35	(-)
			0.80	-	29700	(132000)				0.80	-	28500	(127000)	40	**4F190**	35	(-)
37.7	62100	(7010)	0.80	-	16200	(72100)	45.5	51400	(5810)	0.80	-	15900	(70500)	40	**4E190**	39	(-)
			0.80	-	29500	(131000)				0.80	-	29100	(129000)	40	**4F190**	39	(-)
31.9	73400	(8290)	0.80	-	16500	(73200)	38.5	60800	(6870)	0.80	-	16200	(72000)	40	**4E190**	46	
			0.80	-	29000	(129000)				0.80	-	29500	(131000)	40	**4F190**	46	
27.6	84700	(9560)	0.80	-	16600	(73800)	33.3	70100	(7920)	0.80	-	16400	(72900)	40	**4E190**	53	
			0.80	-	28500	(127000)				0.80	-	29100	(130000)	40	**4F190**	53	
24.4	95900	(10800)	0.80	-	16600	(74000)	29.4	79500	(8980)	0.80	-	16500	(73600)	40	**4E190**	60	
			0.80	-	28000	(125000)				0.80	-	28700	(128000)	40	**4F190**	60	

Sold & Serviced By:
ELECTROMATE
Toll Free Phone (877) SERVO98
www.electromate.com
sales@electromate.com

Notes: [1] For double reduction and 1/8 HP single reduction Y4 ratings, refer to selection tables on pages 2.91 thru 2.130.
[2] Variable Frequency Drive (VFD) notes (see page 2.8 for Constant Torque Speed Ranges):

Page intentionally left blank.

Sold & Serviced By:
ELECTROMATE
Toll Free Phone (877) SERVO98
www.electromate.com
sales@electromate.com

Dimensions

Single Reduction Cyclo®
LHYM-4A100Y~4A125Y

Minimum Engagement		
Frame Size	TT	
	inch	*(mm)*
4A	8.19	*(208)*

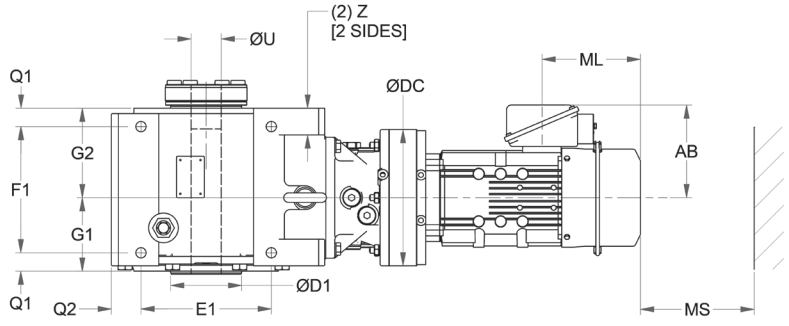

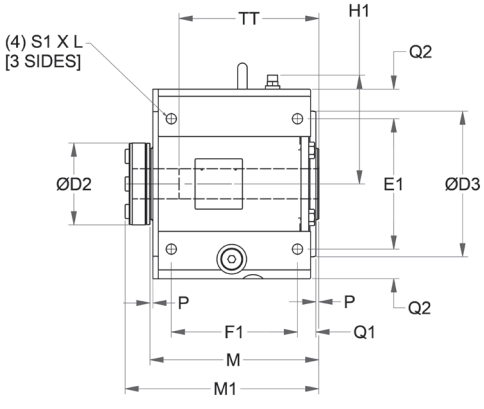

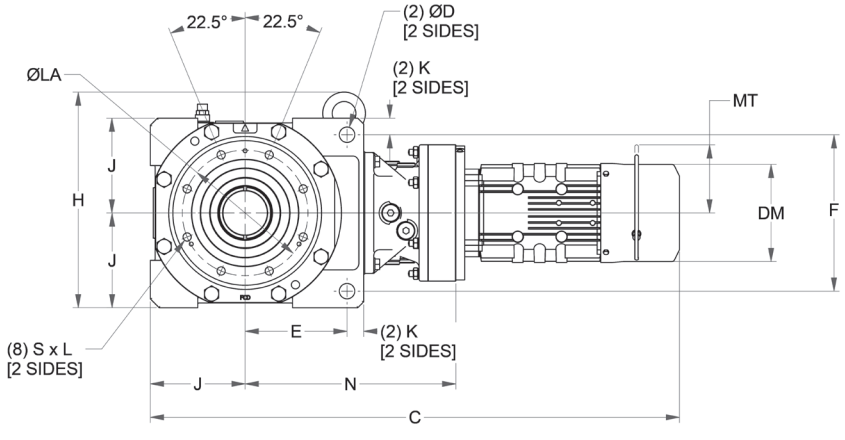

All dimensions are in inches *(mm)*.
For units ordered in the Y2 mounting configuration, please refer to page 2.115 for external lubricant piping dimensions.

Model	N	ØDC	J	E	F	K	Z	ØD	E1	F1	Q1	Q2	S1 x L
4A100, 4A105	9.33 *(237)*	5.91 *(150)*	4.33 *(110)*	4.49 *(114)*	7.24 *(184)*	0.71 *(18)*	1.38 *(35)*	0.71 *(18)*	5.91 *(150)*	6.30 *(160)*	0.91 *(23)*	1.38 *(35)*	M12 x 0.79 *(M12 x 20)*
4A110, 4A115	9.76 *(248)*	6.38 *(162)*											
4A120, 4A125	9.57 *(243)*	8.03 *(204)*											

												ØU	
Model	**M**	**P**	**G1**	**G2**	**H**	**H1**	**ØLA**	**ØD3**	**S x L**	**M1**	**ØD1**	**ØD2**	**Std & Max**	**Min**
4A100, 4A105 4A110, 4A115 4A120, 4A125	8.50 *(216)*	0.2 *(5)*	3.78 *(96)*	4.33 *(110)*	10.9 *(276)*	5.16 *(131)*	6.10 *(155)*	6.89 *(175)*	M10 x 0.67 *(M10 x 17)*	9.84 *(250)*	3.4 *(85)*	4.09 *(104)*	2-3/16 *(55.56)*	1-11/16 *(42.86)*

LHYM01-4A105Y-AV ► LHYM2-4A125Y-EP

All dimensions are in inches *(mm)*

Model	4 Pole Motor HP *(kW)*	Without Brake					With Brake						
		C	DM [1]	AB	ML	Weight lb *(kg)*	C	DM [1]	AB	ML	MS	MT	Weight lb *(kg)*
LHYM01-4A105Y-AV	1/8 x 4 (0.1 x 4)	20.58 (523)	ø4.88 (ø124)	4.63 (118)	2.32 (59)	117 (53)	21.84 (555)	ø4.88 (ø124)	4.63 (118)	3.58 (91)	2.40 (61)	-	120 (55)
LHYM02-4A105Y	1/4 x 4 (0.2 x 4)	20.58 (523)	ø4.88 (ø124)	4.63 (118)	2.32 (59)	117 (53)	21.84 (555)	ø4.88 (ø124)	4.63 (118)	3.58 (91)	2.40 (61)	-	120 (55)
LHYM02-4A105Y-AV	1/4 x 4 (0.2 x 4)	21.37 (543)	ø4.88 (ø124)	4.63 (118)	2.32 (59)	120 (55)	22.63 (575)	ø4.88 (ø124)	4.63 (118)	3.58 (91)	2.40 (61)	-	123 (56)
LHYM03-4A105Y	1/3 x 4 (0.25 x 4)	20.58 (523)	ø4.88 (ø124)	4.63 (118)	2.32 (59)	117 (53)	21.84 (555)	ø4.88 (ø124)	4.63 (118)	3.58 (91)	2.40 (61)	-	120 (55)
LHYM03-4A105Y-AV	1/3 x 4 (0.25 x 4)	21.37 (543)	ø4.88 (ø124)	4.63 (118)	2.32 (59)	120 (55)	22.63 (575)	ø4.88 (ø124)	4.63 (118)	3.58 (91)	2.40 (61)	-	123 (56)
LHYM05-4A105Y	1/2 x 4 (0.4 x 4)	21.37 (543)	ø4.88 (ø124)	4.63 (118)	2.32 (59)	120 (55)	22.63 (575)	ø4.88 (ø124)	4.63 (118)	3.58 (91)	2.40 (61)	-	123 (56)
LHYM05-4A105Y-AV	1/2 x 4 (0.4 x 4)	22.98 (584)	ø5.94 (ø151)	5.67 (144)	3.82 (97)	127 (58)	24.68 (627)	ø5.94 (ø151)	5.67 (144)	5.51 (140)	3.66 (93)	3.94 (100)	133 (61)
LHYM08-4A105Y	3/4 x 4 (0.55 x 4)	22.98 (584)	ø5.94 (ø151)	5.67 (144)	3.82 (97)	124 (57)	24.68 (627)	ø5.94 (ø151)	5.67 (144)	5.51 (140)	3.66 (93)	3.94 (100)	130 (59)
LHYM08-4A105Y-AV	3/4 x 4 (0.55 x 4)	24.28 (617)	ø6.30 (ø160)	5.86 (149)	3.94 (100)	135 (62)	26.72 (679)	ø6.30 (ø160)	5.86 (149)	6.38 (162)	4.53 (115)	4.29 (109)	146 (66)
LHYM1-4A105Y-EP	1 x 4 (0.75 x 4)	24.72 (628)	□6.22 (□158)	5.98 (152)	3.82 (97)	140 (64)	27.22 (691)	□6.22 (□158)	5.98 (152)	6.32 (161)	4.80 (122)	4.25 (108)	150 (68)
LHYM1H-4A105Y-EP	1.5 x 4 (1.1 x 4)	25.78 (655)	□6.57 (□167)	6.16 (156)	3.82 (97)	148 (67)	28.52 (724)	□6.57 (□167)	6.16 (156)	6.56 (167)	5.04 (128)	4.61 (117)	159 (72)
LHYM2-4A105Y-EP	2 x 4 (1.5 x 4)	25.78 (655)	□6.57 (□167)	6.16 (156)	3.82 (97)	150 (69)	28.52 (724)	□6.57 (□167)	6.16 (156)	6.56 (167)	5.04 (128)	4.61 (117)	162 (74)
LHYM3-4A105Y-EP	3 x 4 (2.2 x 4)	26.61 (676)	□7.24 (□184)	6.71 (170)	4.53 (115)	167 (76)	29.68 (754)	□7.24 (□184)	6.71 (170)	7.60 (193)	5.43 (138)	5.04 (128)	183 (83)
LHYM03-4A115Y-AV	1/3 x 4 (0.25 x 4)	21.66 (550)	ø4.88 (ø124)	4.63 (118)	2.32 (59)	135 (62)	22.92 (582)	ø4.88 (ø124)	4.63 (118)	3.58 (91)	2.40 (61)	-	138 (63)
LHYM05-4A115Y	1/2 x 4 (0.4 x 4)	21.66 (550)	ø4.88 (ø124)	4.63 (118)	2.32 (59)	135 (62)	22.92 (582)	ø4.88 (ø124)	4.63 (118)	3.58 (91)	2.40 (61)	-	138 (63)
LHYM05-4A115Y-AV	1/2 x 4 (0.4 x 4)	23.27 (591)	ø5.94 (ø151)	5.67 (144)	3.82 (97)	142 (65)	24.96 (634)	ø5.94 (ø151)	5.67 (144)	5.51 (140)	3.66 (93)	3.94 (100)	148 (67)
LHYM08-4A115Y	3/4 x 4 (0.55 x 4)	23.27 (591)	ø5.94 (ø151)	5.67 (144)	3.82 (97)	139 (63)	24.96 (634)	ø5.94 (ø151)	5.67 (144)	5.51 (140)	3.66 (93)	3.94 (100)	145 (66)
LHYM08-4A115Y-AV	3/4 x 4 (0.55 x 4)	24.57 (624)	ø6.30 (ø160)	5.86 (149)	3.94 (100)	148 (68)	27.01 (686)	ø6.30 (ø160)	5.86 (149)	6.38 (162)	4.53 (115)	4.29 (109)	159 (72)
LHYM1-4A115Y-EP	1 x 4 (0.75 x 4)	25.00 (635)	□6.22 (□158)	5.98 (152)	3.82 (97)	153 (70)	27.50 (699)	□6.22 (□158)	5.98 (152)	6.32 (161)	4.80 (122)	4.25 (108)	163 (74)
LHYM1H-4A115Y-EP	1.5 x 4 (1.1 x 4)	26.07 (662)	□6.57 (□167)	6.16 (156)	3.82 (97)	160 (73)	28.80 (732)	□6.57 (□167)	6.16 (156)	6.56 (167)	5.04 (128)	4.61 (117)	172 (78)
LHYM2-4A115Y-EP	2 x 4 (1.5 x 4)	26.07 (662)	□6.57 (□167)	6.16 (156)	3.82 (97)	163 (74)	28.80 (732)	□6.57 (□167)	6.16 (156)	6.56 (167)	5.04 (128)	4.61 (117)	175 (80)
LHYM3-4A115Y-EP	3 x 4 (2.2 x 4)	25.95 (659)	□7.24 (□184)	6.71 (170)	4.53 (115)	175 (80)	29.02 (737)	□7.24 (□184)	6.71 (170)	7.60 (193)	5.43 (138)	5.04 (128)	192 (87)
LHYM5-4A115Y-EP	5 x 4 (3.7 x 4)	27.01 (686)	□8.74 (□222)	7.34 (186)	4.65 (118)	201 (91)	30.57 (777)	□8.74 (□222)	7.34 (186)	8.21 (209)	6.02 (153)	6.30 (160)	225 (102)
LHYM1-4A125Y-EP	1 x 4 (0.75 x 4)	24.96 (634)	□6.22 (□158)	5.98 (152)	3.82 (97)	157 (71)	27.46 (698)	□6.22 (□158)	5.98 (152)	6.32 (161)	4.80 (122)	4.25 (108)	167 (76)
LHYM1H-4A125Y-EP	1.5 x 4 (1.1 x 4)	26.03 (661)	□6.57 (□167)	6.16 (156)	3.82 (97)	164 (75)	28.76 (731)	□6.57 (□167)	6.16 (156)	6.56 (167)	5.04 (128)	4.61 (117)	175 (80)
LHYM2-4A125Y-EP	2 x 4 (1.5 x 4)	26.03 (661)	□6.57 (□167)	6.16 (156)	3.82 (97)	167 (76)	28.76 (731)	□6.57 (□167)	6.16 (156)	6.56 (167)	5.04 (128)	4.61 (117)	178 (81)

Notes [1]: DM Dimension Symbol ø = Round Fan Cover
DM Dimension Symbol □= Square Fan Cover

LXXX-4XX0/4XX5 Frame sizes have equal dimensions, different ratings.

Dimensions show are for reference only and are subject to change without notice, unless certified.
Certified prints are available after receipt of an order; consult factory.

Dimensions

Single Reduction Cyclo®
LHYM-4A120Y~4B145Y

Minimum Engagement		
Frame Size	TT	
	inch	*(mm)*
4A	8.19	*(208)*
4B	9.53	*(242)*

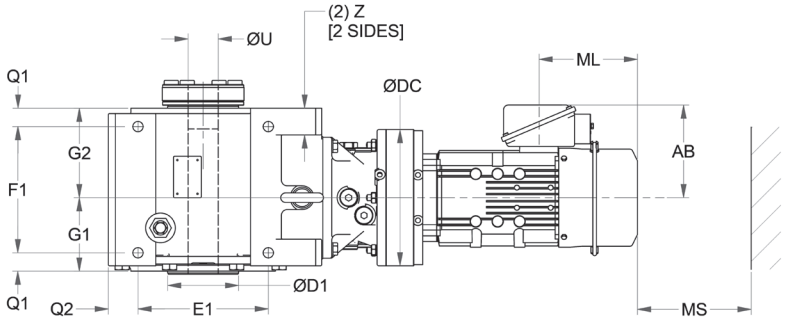

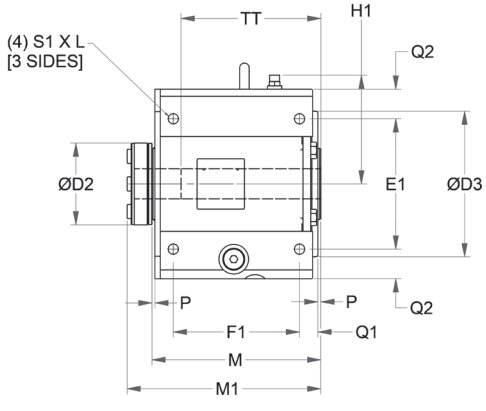

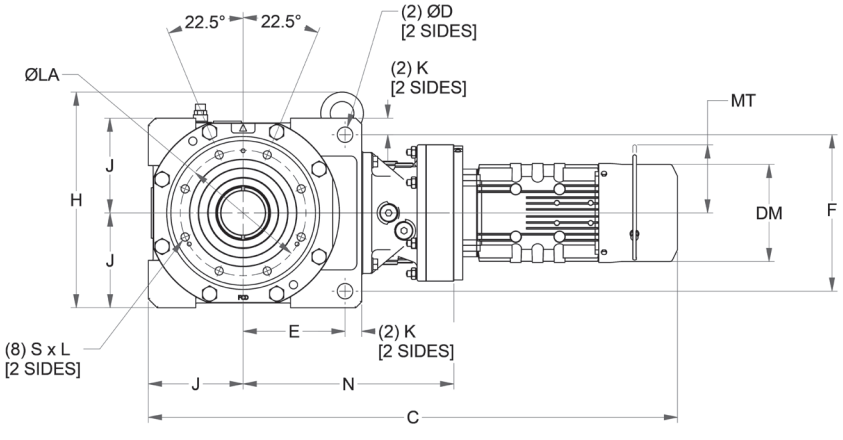

All dimensions are in inches *(mm)*.
For units ordered in the Y2 mounting configuration, please refer to page 2.115 for external lubricant piping dimensions.

Model	N	ØDC	J	E	F	K	Z	ØD	E1	F1	Q1	Q2	S1 x L
4A120, 4A125	9.57 *(243)*	8.03 *(204)*	4.33 *(110)*	4.49 *(114)*	7.24 *(184)*	0.71 *(18)*	1.38 *(25)*	0.71 *(18)*	5.91 *(150)*	6.30 *(160)*	0.91 *(23)*	1.38 *(35)*	M12 x 0.79 *(M12 x 20)*
4A140, 4A145	*10.2 (265)*	9.06 *(230)*											
4B120, 4B125	11.02 *(280)*	8.03 *(204)*	5.12 *(130)*	5.59 *(142)*	8.43 *(214)*	0.91 *(23)*	1.58 *(40)*	0.87 *(22)*	7.48 *(190)*	7.68 *(195)*	1.06 *(27)*	1.38 *(35)*	M16 x 1.02 *(M16 x 26)*
4B140, 4B145	*11.69 (297)*	9.06 *(230)*											

												ØU	
Model	**M**	**P**	**G1**	**G2**	**H**	**H1**	**ØLA**	**ØD3**	**S x L**	**M1**	**ØD1**	**ØD2**	**Std & Max**	**Min**
4B120, 4B125 4B140, 4B145	10.20 *(259)*	0.20 *(5)*	4.80 *(122)*	5.00 *(127)*	12.13 *(308)*	5.94 *(151)*	6.89 *(175)*	7.83 *(199)*	M12 x 0.79 *(M12 x 20)*	11.54 *(293)*	3.94 *(100)*	4.49 *(114)*	2-7/16 *(61.91)*	1-15/16 *(49.21)*
4B120, 4B125 4B140, 4B145	10.20 *(259)*	0.20 *(5)*	4.80 *(122)*	5.00 *(127)*	12.13 *(308)*	5.94 *(151)*	6.89 *(175)*	7.83 *(199)*	M12 x 0.79 *(M12 x 20)*	11.54 *(293)*	3.94 *(100)*	4.49 *(114)*	2-7/16 *(61.91)*	1-15/16 *(49.21)*

LHYM3-4A125Y-EP ► LHYM10-4B145Y-EP

All dimensions are in inches *(mm)*

Model	4 Pole Motor HP *(kW)*	Without Brake					With Brake						
		C	DM [1]	AB	ML	Weight lb *(kg)*	C	DM [1]	AB	ML	MS	MT	Weight lb *(kg)*
LHYM3-4A125Y-EP	3 x 4 (2.2 x 4)	25.44 (646)	□7.24 (□184)	6.71 (170)	4.53 (115)	180 (82)	28.51 (724)	□7.24 (□184)	6.71 (170)	7.60 (193)	5.43 (138)	5.04 (128)	197 (89)
LHYM5-4A125Y-EP	5 x 4 (3.7 x 4)	26.89 (683)	□8.74 (□222)	7.34 (186)	4.65 (118)	205 (93)	30.46 (774)	□8.74 (□222)	7.34 (186)	8.21 (209)	6.02 (153)	6.30 (160)	229 (104)
LHYM8-4A125Y-EP	7.5 x 4 (5.5 x 4)	28.59 (726)	□8.74 (□222)	7.34 (186)	4.65 (118)	239 (109)	32.15 (817)	□8.74 (□222)	7.34 (186)	8.21 (209)	6.02 (153)	6.30 (160)	263 (120)
LHYM3-4A145Y-EP	3 x 4 (2.2 x 4)	26.29 (668)	□7.24 (□184)	6.71 (170)	4.53 (115)	195 (89)	29.36 (746)	□7.24 (□184)	6.71 (170)	7.60 (193)	5.43 (138)	5.04 (128)	212 (96)
LHYM5-4A145Y-EP	5 x 4 (3.7 x 4)	27.55 (700)	□8.74 (□222)	7.34 (186)	4.65 (118)	219 (100)	31.11 (790)	□8.74 (□222)	7.34 (186)	8.21 (209)	6.02 (153)	6.30 (160)	243 (111)
LHYM8-4A145Y-EP	7.5 x 4 (5.5 x 4)	29.24 (743)	□8.74 (□222)	7.34 (186)	4.65 (118)	253 (115)	32.80 (833)	□8.74 (□222)	7.34 (186)	8.21 (209)	6.02 (153)	6.30 (160)	277 (126)
LHYM10-4A145Y-EP	10 x 4 (7.5 x 4)	30.74 (781)	□10.24 (□260)	9.04 (230)	5.43 (138)	280 (127)	34.87 (886)	□10.24 (□260)	9.04 (230)	9.57 (243)	7.44 (189)	7.32 (186)	324 (147)
LHYM15-4A145Y-EP	15 x 4 (11 x 4)	33.18 (843)	□10.24 (□260)	9.04 (230)	5.43 (138)	293 (133)	37.31 (948)	□10.24 (□260)	9.04 (230)	9.57 (243)	7.44 (189)	7.32 (186)	337 (153)
LHYM20-4A145Y-EP	20 x 4 (15 x 4)	35.62 (905)	ø12.49 (ø317)	10.26 (261)	7.01 (178)	373 (170)	40.91 (1039)	ø12.61 (ø320)	10.26 (261)	12.30 (313)	9.53 (242)	-	459 (209)
LHYM05-4B125Y	1/2 x 4 (0.4 x 4)	24.05 (611)	ø4.88 (ø124)	4.63 (118)	2.32 (59)	204 (93)	25.31 (643)	ø4.88 (ø124)	4.63 (118)	3.58 (91)	2.40 (61)	-	207 (94)
LHYM05-4B125Y-AV	1/2 x 4 (0.4 x 4)	25.46 (647)	ø5.94 (ø151)	5.67 (144)	3.82 (97)	211 (96)	27.16 (690)	ø5.94 (ø151)	5.67 (144)	5.51 (140)	3.66 (93)	3.94 (100)	217 (99)
LHYM08-4B125Y	3/4 x 4 (0.55 x 4)	25.46 (647)	ø5.94 (ø151)	5.67 (144)	3.82 (97)	208 (95)	27.16 (690)	ø5.94 (ø151)	5.67 (144)	5.51 (140)	3.66 (93)	3.94 (100)	214 (97)
LHYM08-4B125Y-AV	3/4 x 4 (0.55 x 4)	26.76 (680)	ø6.30 (ø160)	5.86 (149)	3.94 (100)	217 (99)	29.20 (742)	ø6.30 (ø160)	5.86 (149)	6.38 (162)	4.53 (115)	4.29 (109)	227 (103)
LHYM1-4B125Y-EP	1 x 4 (0.75 x 4)	27.20 (691)	□6.22 (□158)	5.98 (152)	3.82 (97)	222 (101)	29.70 (754)	□6.22 (□158)	5.98 (152)	6.32 (161)	4.80 (122)	4.25 (108)	231 (105)
LHYM1H-4B125Y-EP	1.5 x 4 (1.1 x 4)	28.26 (718)	□6.57 (□167)	6.16 (156)	3.82 (97)	228 (104)	31.00 (787)	□6.57 (□167)	6.16 (156)	6.56 (167)	5.04 (128)	4.61 (117)	240 (109)
LHYM2-4B125Y-EP	2 x 4 (1.5 x 4)	28.26 (718)	□6.57 (□167)	6.16 (156)	3.82 (97)	231 (105)	31.00 (787)	□6.57 (□167)	6.16 (156)	6.56 (167)	5.04 (128)	4.61 (117)	243 (111)
LHYM3-4B125Y-EP	3 x 4 (2.2 x 4)	27.67 (703)	□7.24 (□184)	6.71 (170)	4.53 (115)	245 (111)	30.74 (781)	□7.24 (□184)	6.71 (170)	7.60 (193)	5.43 (138)	5.04 (128)	261 (119)
LHYM5-4B125Y-EP	5 x 4 (3.7 x 4)	29.13 (740)	□8.74 (□222)	7.34 (186)	4.65 (118)	270 (123)	32.69 (830)	□8.74 (□222)	7.34 (186)	8.21 (209)	6.02 (153)	6.30 (160)	294 (134)
LHYM8-4B125Y-EP	7.5 x 4 (5.5 x 4)	30.82 (783)	□8.74 (□222)	7.34 (186)	4.65 (118)	304 (138)	34.38 (873)	□8.74 (□222)	7.34 (186)	8.21 (209)	6.02 (153)	6.30 (160)	328 (149)
LHYM1-4B145Y-EP	1 x 4 (0.75 x 4)	27.89 (708)	□6.22 (□158)	5.98 (152)	3.82 (97)	241 (109)	30.39 (772)	□6.22 (□158)	5.98 (152)	6.32 (161)	4.80 (122)	4.25 (108)	250 (114)
LHYM1H-4B145Y-EP	1.5 x 4 (1.1 x 4)	28.95 (735)	□6.57 (□167)	6.16 (156)	3.82 (97)	247 (112)	31.69 (805)	□6.57 (□167)	6.16 (156)	6.56 (167)	5.04 (128)	4.61 (117)	259 (118)
LHYM2-4B145Y-EP	2 x 4 (1.5 x 4)	28.95 (735)	□6.57 (□167)	6.16 (156)	3.82 (97)	250 (114)	31.69 (805)	□6.57 (□167)	6.16 (156)	6.56 (167)	5.04 (128)	4.61 (117)	262 (119)
LHYM3-4B145Y-EP	3 x 4 (2.2 x 4)	28.36 (720)	□7.24 (□184)	6.71 (170)	4.53 (115)	262 (119)	31.43 (798)	□7.24 (□184)	6.71 (170)	7.60 (193)	5.43 (138)	5.04 (128)	279 (127)
LHYM5-4B145Y-EP	5 x 4 (3.7 x 4)	29.62 (752)	□8.74 (□222)	7.34 (186)	4.65 (118)	286 (130)	33.18 (843)	□8.74 (□222)	7.34 (186)	8.21 (209)	6.02 (153)	6.30 (160)	310 (141)
LHYM8-4B145Y-EP	7.5 x 4 (5.5 x 4)	31.31 (795)	□8.74 (□222)	7.34 (186)	4.65 (118)	320 (146)	34.88 (886)	□8.74 (□222)	7.34 (186)	8.21 (209)	6.02 (153)	6.30 (160)	344 (156)
LHYM10-4B145Y-EP	10 x 4 (7.5 x 4)	32.81 (833)	□10.24 (□260)	9.04 (230)	5.43 (138)	347 (158)	36.94 (938)	□10.24 (□260)	9.04 (230)	9.57 (243)	7.44 (189)	7.32 (186)	391 (178)
LHYM15-4B145Y-EP	15 x 4 (11 x 4)	35.25 (895)	□10.24 (□260)	9.04 (230)	5.43 (138)	360 (163)	39.38 (1000)	□10.24 (□260)	9.04 (230)	9.57 (243)	7.44 (189)	7.32 (186)	404 (184)

Notes [1]: DM Dimension Symbol ø = Round Fan Cover
DM Dimension Symbol □= Square Fan Cover

LXXX-4XX0/4XX5 Frame sizes have equal dimensions, different ratings.

Dimensions show are for reference only and are subject to change without notice, unless certified.
Certified prints are available after receipt of an order; consult factory.

Dimensions

Single Reduction Cyclo®
LHYM-4B140Y~4C165Y

Minimum Engagement		
Frame Size	TT	
	inch	*(mm)*
4B	9.53	*(242)*
4C	10.98	*(279)*

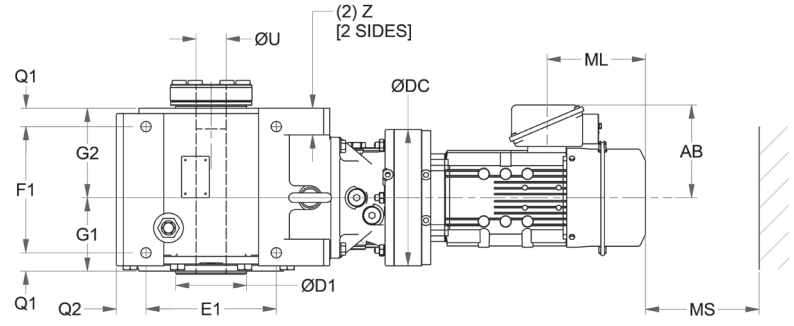

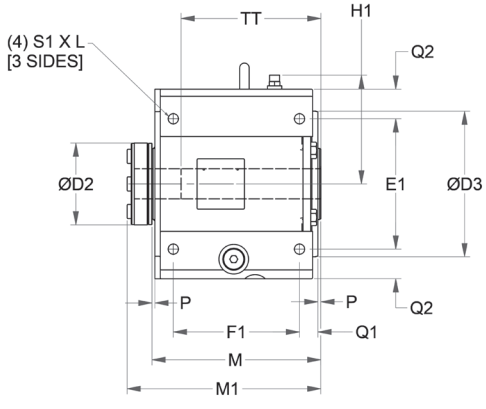

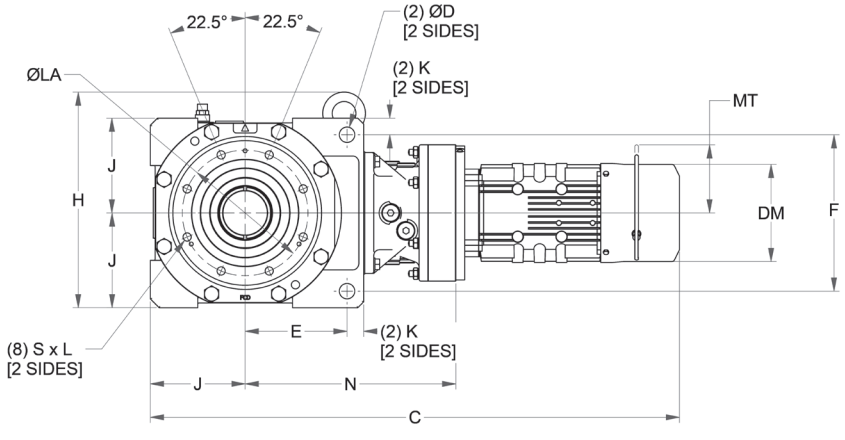

All dimensions are in inches *(mm)*.
For units ordered in the Y2 mounting configuration, please refer to page 2.115 for external lubricant piping dimensions.

Model	N	ØDC	J	E	F	K	Z	ØD	E1	F1	Q1	Q2	S1 x L
4B140, 4B145	*11.69 (297)*	9.06 *(230)*	5.12 *(130)*	5.59 *(142)*	8.43 *(214)*	0.91 *(23)*	1.58 *(40)*	0.87 *(22)*	7.48 *(190)*	7.68 *(195)*	1.06 *(27)*	1.38 *(35)*	M16 x 1.02 *(M16 x 26)*
4B160, 4B165	12.83 *(326)*	11.8 *(300)*											
4C140, 4C145	14.0 *(356)*	9.06 *(230)*	6.30 *(160)*	6.77 *(172)*	10.4 *(264)*	1.1 *(28)*	1.8 *(45)*	1.0 *(26)*	8.66 *(220)*	8.39 *(213)*	1.2 *(31)*	2.0 *(50)*	M20 x 1.30 *(M20 x 33)*
4C160, 4C165	14.8 *(377)*	11.8 *(300)*											

												ØU	
Model	M	P	G1	G2	H	H1	ØLA	ØD3	S x L	M1	ØD1	ØD2	Std & Max	Min
4B140, 4B145 4B160, 4B165	10.20 *(259)*	0.20 *(5)*	4.80 *(122)*	5.00 *(127)*	12.13 *(308)*	5.94 *(151)*	6.89 *(175)*	7.83 *(199)*	M12 x 0.79 *(M12 x 20)*	11.54 *(293)*	3.94 *(100)*	4.49 *(114)*	2-7/16 *(61.91)*	1-15/16 *(49.21)*
4C140, 4C145 4C160, 4C165	11.2 *(285)*	0.2 *(5)*	4.88 *(124)*	5.94 *(151)*	14.33 *(364)*	7.20 *(183)*	8.35 *(212)*	9.61 *(244)*	M16 x 1.02 *(M16 x 26)*	12.83 *(326)*	4.72 *(120)*	5.43 *(138)*	2-15/16 *(74.61)*	2-3/16 *(55.56)*

LHYM15-4B145Y-EP ► LHYM30-4C165Y-EP

All dimensions are in inches *(mm)*

Model	4 Pole Motor HP *(kW)*	Without Brake					With Brake						
		C	DM [1]	AB	ML	Weight lb *(kg)*	C	DM [1]	AB	ML	MS	MT	Weight lb *(kg)*
LHYM20-4B145Y-EP	20 x 4 (15 x 4)	37.69 (957)	ø12.49 (ø317)	10.26 (261)	7.01 (178)	440 (200)	42.99 (1092)	ø12.61 (ø320)	10.26 (261)	12.30 (313)	9.53 (242)	-	526 (239)
LHYM10-4B165Y-EP	10 x 4 (7.5 x 4)	34.10 (866)	□10.24 (□260)	9.04 (230)	5.43 (138)	394 (179)	38.24 (971)	□10.24 (□260)	9.04 (230)	9.57 (243)	7.44 (189)	7.32 (186)	438 (199)
LHYM15-4B165Y-EP	15 x 4 (11 x 4)	36.54 (928)	□10.24 (□260)	9.04 (230)	5.43 (138)	407 (185)	40.68 (1033)	□10.24 (□260)	9.04 (230)	9.57 (243)	7.44 (189)	7.32 (186)	451 (205)
LHYM20-4B165Y-EP	20 x 4 (15 x 4)	38.83 (986)	ø12.49 (ø317)	10.26 (261)	7.01 (178)	490 (222)	44.12 (1121)	ø12.61 (ø320)	10.26 (261)	12.30 (313)	9.53 (242)	-	576 (261)
LHYM25-4B165Y-EP	25 x 4 (18.5 x 4)	43.00 (1092)	ø15.12 (ø384)	13.39 (340)	9.06 (230)	768 (348)	49.85 (1266)	ø15.28 (ø388)	13.39 (340)	15.91 (404)	12.13 (308)	-	865 (392)
LHYM30-4B165Y-EP	30 x 4 (22 x 4)	43.00 (1092)	ø15.12 (ø384)	13.39 (340)	9.06 (230)	768 (348)	49.85 (1266)	ø15.28 (ø388)	13.39 (340)	15.91 (404)	12.13 (308)	-	865 (392)
LHYM1-4C145Y-EP	1 x 4 (0.75 x 4)	31.36 (797)	□6.22 (□158)	5.98 (152)	3.82 (97)	347 (158)	33.86 (860)	□6.22 (□158)	5.98 (152)	6.32 (161)	4.80 (122)	4.25 (108)	357 (162)
LHYM1H-4C145Y-EP	1.5 x 4 (1.1 x 4)	32.42 (824)	□6.57 (□167)	6.16 (156)	3.82 (97)	354 (161)	35.16 (893)	□6.57 (□167)	6.16 (156)	6.56 (167)	5.04 (128)	4.61 (117)	366 (166)
LHYM2-4C145Y-EP	2 x 4 (1.5 x 4)	32.42 (824)	□6.57 (□167)	6.16 (156)	3.82 (97)	357 (162)	35.16 (893)	□6.57 (□167)	6.16 (156)	6.56 (167)	5.04 (128)	4.61 (117)	369 (168)
LHYM3-4C145Y-EP	3 x 4 (2.2 x 4)	31.83 (809)	□7.24 (□184)	6.71 (170)	4.53 (115)	369 (168)	34.90 (887)	□7.24 (□184)	6.71 (170)	7.60 (193)	5.43 (138)	5.04 (128)	386 (175)
LHYM5-4C145Y-EP	5 x 4 (3.7 x 4)	33.09 (841)	□8.74 (□222)	7.34 (186)	4.65 (118)	393 (179)	36.66 (931)	□8.74 (□222)	7.34 (186)	8.21 (209)	6.02 (153)	6.30 (160)	417 (189)
LHYM8-4C145Y-EP	7.5 x 4 (5.5 x 4)	34.79 (884)	□8.74 (□222)	7.34 (186)	4.65 (118)	427 (194)	38.35 (974)	□8.74 (□222)	7.34 (186)	8.21 (209)	6.02 (153)	6.30 (160)	451 (205)
LHYM10-4C145Y-EP	10 x 4 (7.5 x 4)	36.28 (922)	□10.24 (□260)	9.04 (230)	5.43 (138)	454 (206)	40.42 (1027)	□10.24 (□260)	9.04 (230)	9.57 (243)	7.44 (189)	7.32 (186)	498 (226)
LHYM15-4C145Y-EP	15 x 4 (11 x 4)	38.72 (984)	□10.24 (□260)	9.04 (230)	5.43 (138)	467 (212)	42.86 (1089)	□10.24 (□260)	9.04 (230)	9.57 (243)	7.44 (189)	7.32 (186)	511 (232)
LHYM20-4C145Y-EP	20 x 4 (15 x 4)	41.16 (1046)	ø12.49 (ø317)	10.26 (261)	7.01 (178)	547 (248)	46.46 (1180)	ø12.61 (ø320)	10.26 (261)	12.30 (313)	9.53 (242)	-	633 (287)
LHYM1H-4C165Y-EP	1.5 x 4 (1.1 x 4)	33.26 (845)	□6.57 (□167)	6.16 (156)	3.82 (97)	399 (181)	36.00 (914)	□6.57 (□167)	6.16 (156)	6.56 (167)	5.04 (128)	4.61 (117)	411 (187)
LHYM2-4C165Y-EP	2 x 4 (1.5 x 4)	33.26 (845)	□6.57 (□167)	6.16 (156)	3.82 (97)	402 (183)	36.00 (914)	□6.57 (□167)	6.16 (156)	6.56 (167)	5.04 (128)	4.61 (117)	414 (188)
LHYM3-4C165Y-EP	3 x 4 (2.2 x 4)	32.67 (830)	□7.24 (□184)	6.71 (170)	4.53 (115)	412 (187)	35.74 (908)	□7.24 (□184)	6.71 (170)	7.60 (193)	5.43 (138)	5.04 (128)	429 (195)
LHYM5-4C165Y-EP	5 x 4 (3.7 x 4)	34.13 (867)	□8.74 (□222)	7.34 (186)	4.65 (118)	437 (198)	37.69 (957)	□8.74 (□222)	7.34 (186)	8.21 (209)	6.02 (153)	6.30 (160)	461 (209)
LHYM8-4C165Y-EP	7.5 x 4 (5.5 x 4)	35.82 (910)	□8.74 (□222)	7.34 (186)	4.65 (118)	471 (214)	39.39 (1000)	□8.74 (□222)	7.34 (186)	8.21 (209)	6.02 (153)	6.30 (160)	495 (225)
LHYM10-4C165Y-EP	10 x 4 (7.5 x 4)	37.28 (947)	□10.24 (□260)	9.04 (230)	5.43 (138)	499 (227)	41.41 (1052)	□10.24 (□260)	9.04 (230)	9.57 (243)	7.44 (189)	7.32 (186)	543 (247)
LHYM15-4C165Y-EP	15 x 4 (11 x 4)	39.72 (1009)	□10.24 (□260)	9.04 (230)	5.43 (138)	511 (232)	43.85 (1114)	□10.24 (□260)	9.04 (230)	9.57 (243)	7.44 (189)	7.32 (186)	555 (252)
LHYM20-4C165Y-EP	20 x 4 (15 x 4)	42.00 (1067)	ø12.49 (ø317)	10.26 (261)	7.01 (178)	595 (270)	47.30 (1201)	ø12.61 (ø320)	10.26 (261)	12.30 (313)	9.53 (242)	-	681 (309)
LHYM25-4C165Y-EP	25 x 4 (18.5 x 4)	46.18 (1173)	ø15.12 (ø384)	13.39 (340)	9.06 (230)	872 (396)	53.03 (1347)	ø15.28 (ø388)	13.39 (340)	15.91 (404)	12.13 (308)	-	969 (440)
LHYM30-4C165Y-EP	30 x 4 (22 x 4)	46.18 (1173)	ø15.12 (ø384)	13.39 (340)	9.06 (230)	872 (396)	53.03 (1347)	ø15.28 (ø388)	13.39 (340)	15.91 (404)	12.13 (308)	-	969 (440)
LHYM15-4C175Y-EP	15 x 4 (11 x 4)	39.93 (1014)	□10.24 (□260)	9.04 (230)	5.43 (138)	567 (257)	44.06 (1119)	□10.24 (□260)	9.04 (230)	9.57 (243)	7.44 (189)	7.32 (186)	611 (277)

Notes [1]: DM Dimension Symbol ø = Round Fan Cover
DM Dimension Symbol □= Square Fan Cover

LXXX-4XX0/4XX5 Frame sizes have equal dimensions, different ratings.

Dimensions show are for reference only and are subject to change without notice, unless certified.
Certified prints are available after receipt of an order; consult factory.

Dimensions

Single Reduction Cyclo®
LHYM-4C170Y~4D185Y

Minimum Engagement		
Frame Size	TT	
	inch	*(mm)*
4C	10.98	*(279)*
4D	12.83	*(326)*

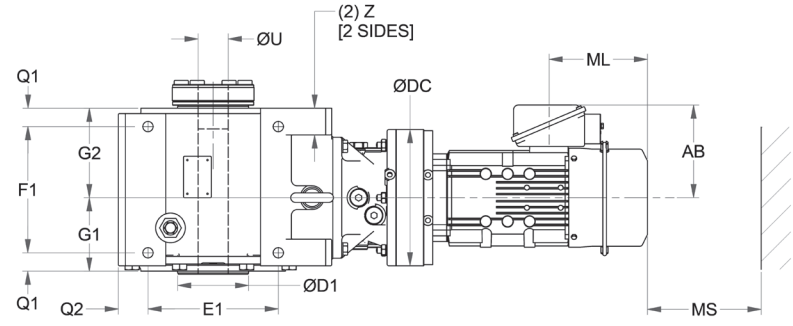

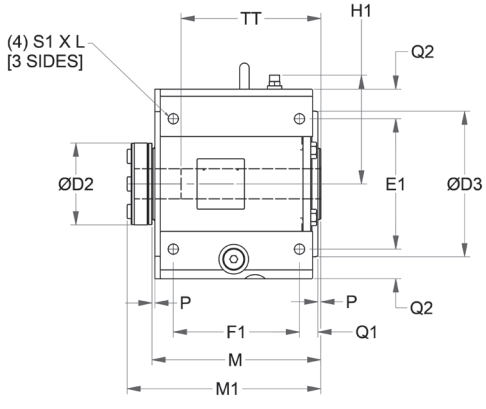

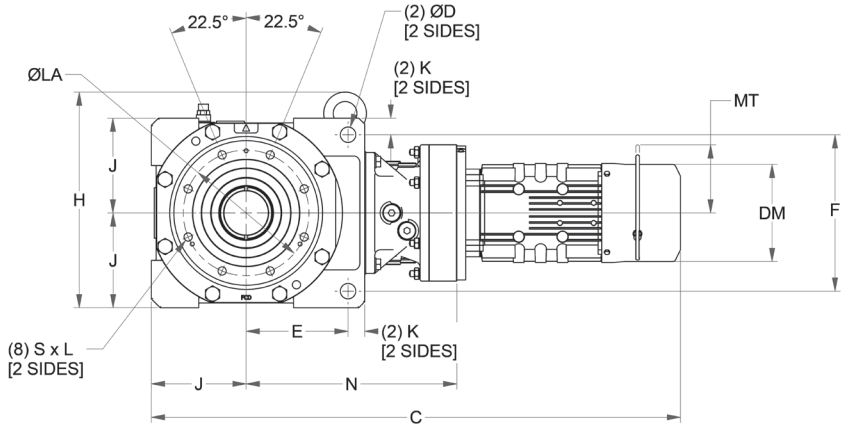

All dimensions are in inches *(mm)*.
For units ordered in the Y2 mounting configuration, please refer to page 2.115 for external lubricant piping dimensions.

Model	N	ØDC	J	E	F	K	Z	ØD	E1	F1	Q1	Q2	S1 x L
4C170,4C175	15.5 *(393)*	13.4 *(340)*	6.30 *(160)*	6.77 *(172)*	10.4 *(264)*	1.1 *(28)*	1.8 *(45)*	1.0 *(26)*	8.66 *(220)*	8.39 *(213)*	1.2 *(31)*	2.0 *(50)*	M20 x 1.30 *(M20 x 33)*
4D170, 4D175	17.4 *(443)*	13.4 *(340)*	7.48 *(190)*	7.60 *(193)*	12.2 *(310)*	1.4 *(35)*	2.2 *(55)*	1.3 *(33)*	9.84 *(250)*	10.0 *(254)*	1.4 *(36)*	2.6 *(65)*	M24 x 1.57 *(M24 x 40)*
4D180, 4D185	17.6 *(446)*	14.6 *(370)*											

												ØU	
Model	M	P	G1	G2	H	H1	ØLA	ØD3	S x L	M1	ØD1	ØD2	Std & Max	Min
4C170, 4C175	11.2 *(285)*	0.2 *(5)*	4.88 *(124)*	5.94 *(151)*	14.33 *(364)*	7.20 *(183)*	8.35 *(212)*	9.61 *(244)*	M16 x 1.02 *(M16 x 26)*	12.83 *(326)*	4.72 *(120)*	5.43 *(138)*	2-15/16 *(74.61)*	2-3/16 *(55.56)*
4D170, 4D175 4D180, 4D185	13.4 *(340)*	0.3 *(7)*	5.83 *(148)*	7.01 *(178)*	16.7 *(424)*	8.39 *(213)*	10.0 *(255)*	11.6 *(295)*	M20 x 1.30 *(M20 x 33)*	15.0 *(381)*	5.51 *(140)*	5.98 *(152)*	3-7/16 *(87.31)*	2-7/16 *(61.91)*

LHYM15-4C175Y-EP ► LHYM15-4D185Y-EP

All dimensions are in inches *(mm)*

Model	4 Pole Motor HP *(kW)*	Without Brake					With Brake						
		C	DM [1]	AB	ML	Weight lb *(kg)*	C	DM [1]	AB	ML	MS	MT	Weight lb *(kg)*
LHYM20-4C175Y-EP	20 x 4 (15 x 4)	42.65 (1083)	ø12.49 (ø317)	10.26 (261)	7.01 (178)	647 (294)	47.94 (1218)	ø12.61 (ø320)	10.26 (261)	12.30 (313)	9.53 (242)	-	733 (333)
LHYM25-4C175Y-EP	25 x 4 (18.5 x 4)	46.82 (1189)	ø15.12 (ø384)	13.39 (340)	9.06 (230)	927 (421)	53.67 (1363)	ø15.28 (ø388)	13.39 (340)	15.91 (404)	12.13 (308)	-	1024 (465)
LHYM30-4C175Y-EP	30 x 4 (22 x 4)	46.82 (1189)	ø15.12 (ø384)	13.39 (340)	9.06 (230)	927 (421)	53.67 (1363)	ø15.28 (ø388)	13.39 (340)	15.91 (404)	12.13 (308)	-	1024 (465)
LHYM40-4C175Y-EP	40 x 4 (30 x 4)	51.70 (1313)	ø15.12 (ø384)	13.39 (340)	9.06 (230)	1040 (472)	58.55 (1487)	ø15.28 (ø388)	13.39 (340)	15.91 (404)	12.13 (308)	-	1137 (516)
LHYM2-4D165Y-EP	2 x 4 (1.5 x 4)	35.77 (909)	□6.57 (□167)	6.16 (156)	3.82 (97)	487 (221)	38.51 (978)	□6.57 (□167)	6.16 (156)	6.56 (167)	5.04 (128)	4.61 (117)	499 (226)
LHYM3-4D165Y-EP	3 x 4 (2.2 x 4)	35.52 (902)	□7.24 (□184)	6.71 (170)	4.53 (115)	487 (221)	38.59 (980)	□7.24 (□184)	6.71 (170)	7.60 (193)	5.43 (138)	5.04 (128)	504 (229)
LHYM5-4D165Y-EP	5 x 4 (3.7 x 4)	36.38 (924)	□8.74 (□222)	7.34 (186)	4.65 (118)	487 (221)	39.95 (1015)	□8.74 (□222)	7.34 (186)	8.21 (209)	6.02 (153)	6.30 (160)	511 (232)
LHYM8-4D165Y-EP	7.5 x 4 (5.5 x 4)	38.08 (967)	□8.74 (□222)	7.34 (186)	4.65 (118)	487 (221)	41.64 (1058)	□8.74 (□222)	7.34 (186)	8.21 (209)	6.02 (153)	6.30 (160)	511 (232)
LHYM10-4D165Y-EP	10 x 4 (7.5 x 4)	38.43 (976)	□10.24 (□260)	9.04 (230)	5.43 (138)	490 (222)	42.56 (1081)	□10.24 (□260)	9.04 (230)	9.57 (243)	7.44 (189)	7.32 (186)	534 (243)
LHYM15-4D165Y-EP	15 x 4 (11 x 4)	40.87 (1038)	□10.24 (□260)	9.04 (230)	5.43 (138)	490 (222)	45.01 (1143)	□10.24 (□260)	9.04 (230)	9.57 (243)	7.44 (189)	7.32 (186)	534 (242)
LHYM20-4D165Y-EP	20 x 4 (15 x 4)	42.49 (1079)	ø12.49 (ø317)	10.26 (261)	7.01 (178)	490 (222)	47.78 (1214)	ø12.61 (ø320)	10.26 (261)	12.30 (313)	9.53 (242)	-	576 (261)
LHYM25-4D165Y-EP	25 x 4 (18.5 x 4)	45.28 (1150)	ø15.12 (ø384)	13.39 (340)	9.06 (230)	506 (230)	52.13 (1324)	ø15.28 (ø388)	13.39 (340)	15.91 (404)	12.13 (308)	-	603 (274)
LHYM30-4D165Y-EP	30 x 4 (22 x 4)	45.28 (1150)	ø15.12 (ø384)	13.39 (340)	9.06 (230)	506 (230)	52.13 (1324)	ø15.28 (ø388)	13.39 (340)	15.91 (404)	12.13 (308)	-	603 (274)
LHYM5-4D175Y-EP	5 x 4 (3.7 x 4)	36.14 (918)	□8.74 (□222)	7.34 (186)	4.65 (118)	524 (238)	39.70 (1008)	□8.74 (□222)	7.34 (186)	8.21 (209)	6.02 (153)	6.30 (160)	547 (249)
LHYM8-4D175Y-EP	7.5 x 4 (5.5 x 4)	37.83 (961)	□8.74 (□222)	7.34 (186)	4.65 (118)	524 (238)	41.39 (1051)	□8.74 (□222)	7.34 (186)	8.21 (209)	6.02 (153)	6.30 (160)	547 (249)
LHYM10-4D175Y-EP	10 x 4 (7.5 x 4)	38.18 (970)	□10.24 (□260)	9.04 (230)	5.43 (138)	526 (239)	42.32 (1075)	□10.24 (□260)	9.04 (230)	9.57 (243)	7.44 (189)	7.32 (186)	571 (259)
LHYM15-4D175Y-EP	15 x 4 (11 x 4)	40.62 (1032)	□10.24 (□260)	9.04 (230)	5.43 (138)	526 (239)	44.76 (1137)	□10.24 (□260)	9.04 (230)	9.57 (243)	7.44 (189)	7.32 (186)	570 (259)
LHYM20-4D175Y-EP	20 x 4 (15 x 4)	42.24 (1073)	ø12.49 (ø317)	10.26 (261)	7.01 (178)	526 (239)	47.53 (1207)	ø12.61 (ø320)	10.26 (261)	12.30 (313)	9.53 (242)	-	612 (278)
LHYM25-4D175Y-EP	25 x 4 (18.5 x 4)	45.03 (1144)	ø15.12 (ø384)	13.39 (340)	9.06 (230)	542 (246)	51.88 (1318)	ø15.28 (ø388)	13.39 (340)	15.91 (404)	12.13 (308)	-	639 (290)
LHYM30-4D175Y-EP	30 x 4 (22 x 4)	45.03 (1144)	ø15.12 (ø384)	13.39 (340)	9.06 (230)	542 (246)	51.88 (1318)	ø15.28 (ø388)	13.39 (340)	15.91 (404)	12.13 (308)	-	639 (290)
LHYM40-4D175Y-EP	40 x 4 (30 x 4)	49.92 (1268)	ø15.12 (ø384)	13.39 (340)	9.06 (230)	542 (246)	56.77 (1442)	ø15.28 (ø388)	13.39 (340)	15.91 (404)	12.13 (308)	-	639 (290)
LHYM5-4D185Y-EP	5 x 4 (3.7 x 4)	36.26 (921)	□8.74 (□222)	7.34 (186)	4.65 (118)	537 (244)	39.82 (1012)	□8.74 (□222)	7.34 (186)	8.21 (209)	6.02 (153)	6.30 (160)	561 (255)
LHYM8-4D185Y-EP	7.5 x 4 (5.5 x 4)	37.95 (964)	□8.74 (□222)	7.34 (186)	4.65 (118)	537 (244)	41.52 (1055)	□8.74 (□222)	7.34 (186)	8.21 (209)	6.02 (153)	6.30 (160)	561 (255)
LHYM10-4D185Y-EP	10 x 4 (7.5 x 4)	38.31 (973)	□10.24 (□260)	9.04 (230)	5.43 (138)	540 (245)	42.44 (1078)	□10.24 (□260)	9.04 (230)	9.57 (243)	7.44 (189)	7.32 (186)	584 (265)
LHYM15-4D185Y-EP	15 x 4 (11 x 4)	40.75 (1035)	□10.24 (□260)	9.04 (230)	5.43 (138)	540 (245)	44.88 (1140)	□10.24 (□260)	9.04 (230)	9.57 (243)	7.44 (189)	7.32 (186)	584 (265)
LHYM20-4D185Y-EP	20 x 4 (15 x 4)	42.36 (1076)	ø12.49 (ø317)	10.26 (261)	7.01 (178)	540 (245)	47.66 (1211)	ø12.61 (ø320)	10.26 (261)	12.30 (313)	9.53 (242)	-	626 (284)
LHYM25-4D185Y-EP	25 x 4 (18.5 x 4)	45.16 (1147)	ø15.12 (ø384)	13.39 (340)	9.06 (230)	556 (252)	52.01 (1321)	ø15.28 (ø388)	13.39 (340)	15.91 (404)	12.13 (308)	-	653 (296)

Notes [1]: DM Dimension Symbol ø = Round Fan Cover
DM Dimension Symbol □= Square Fan Cover

LXXX-4XX0/4XX5 Frame sizes have equal dimensions, different ratings.

Dimensions show are for reference only and are subject to change without notice, unless certified.
Certified prints are available after receipt of an order; consult factory.

Dimensions

Single Reduction Cyclo®
LHYM-4D180Y~4E195Y

Minimum Engagement		
Frame Size	TT	
	inch	*(mm)*
4D	12.83	*(326)*
4E	14.13	*(359)*

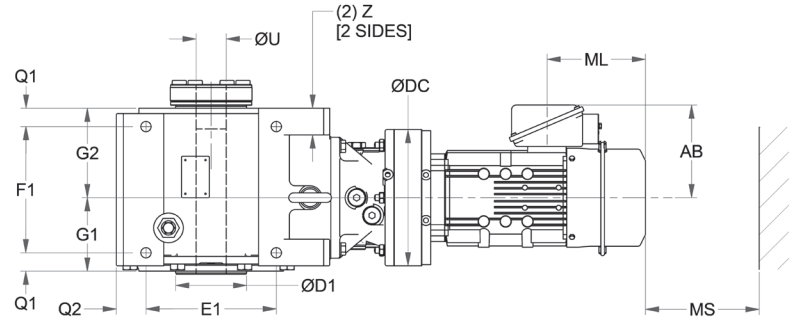

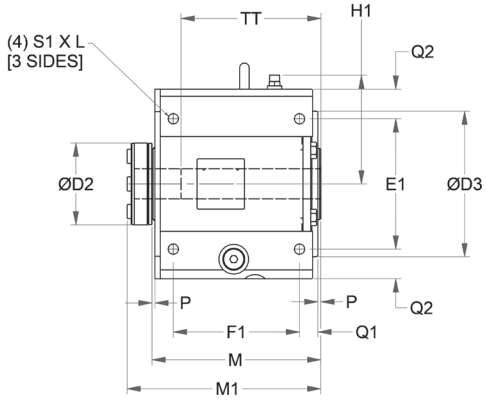

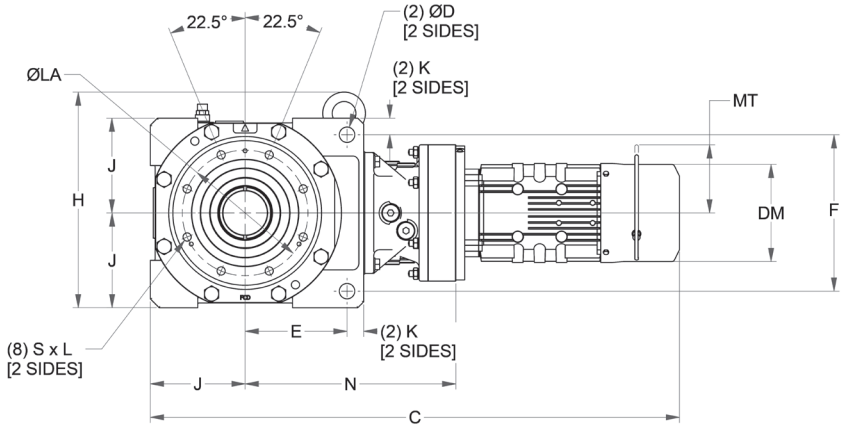

All dimensions are in inches *(mm)*.
For units ordered in the Y2 mounting configuration, please refer to page 2.115 for external lubricant piping dimensions.

Model	N	ØDC	J	E	F	K	Z	ØD	E1	F1	Q1	Q2	S1 x L
4D180, 4D185	17.6 *(446)*	14.6 *(370)*	7.48 *(190)*	7.60 *(193)*	12.2 *(310)*	1.4 *(35)*	2.2 *(55)*	1.3 *(33)*	9.84 *(250)*	10.0 *(254)*	1.4 *(36)*	2.6 *(65)*	M24 x 1.57 *(M24 x 40)*
4E170, 4E175	17.6 *(446)*	14.6 *(370)*	8.46 *(215)*	9.06 *(230)*	14.2 *(360)*	1.4 *(35)*	2.2 *(55)*	1.3 *(33)*	11.8 *(300)*	11.1 *(283)*	1.5 *(38)*	2.6 *(65)*	M24 x 1.57 *(M24 x 40)*
4E180, 4E185	18.5 *(471)*	14.6 *(370)*											
4E190, 4E195	19.3 *(490)*	16.9 *(430)*											

												ØU	
Model	M	P	G1	G2	H	H1	ØLA	ØD3	S x L	M1	ØD1	ØD2	Std & Max	Min
4D180, 4D185	13.4 *(340)*	0.3 *(7)*	5.83 *(148)*	7.01 *(178)*	16.7 *(424)*	8.39 *(213)*	10.0 *(255)*	11.6 *(295)*	M20 x 1.30 *(M20 x 33)*	15.0 *(381)*	5.51 *(140)*	5.98 *(152)*	3-7/16 *(87.31)*	2-7/16 *(61.91)*
4E170, 4E175 4E180, 4E185 4E190, 4E195	14.7 *(373)*	0.3 *(7)*	6.14 *(156)*	7.99 *(203)*	19.6 *(498)*	9.37 *(238)*	11.0 *(280)*	12.6 *(320)*	M20 x 1.38 *(M20 x 35)*	16.3 *(414)*	6.30 *(160)*	6.69 *(170)*	3-15/16 *(100)*	2-15/16 *(74.61)*

LHYM20-4D185Y-EP ► LHYM25-4E195Y-EP

All dimensions are in inches *(mm)*

Model	4 Pole Motor HP *(kW)*	Without Brake					With Brake						
		C	DM [1]	AB	ML	Weight lb *(kg)*	C	DM [1]	AB	ML	MS	MT	Weight lb *(kg)*
LHYM30-4D185Y-EP	30 x 4 (22 x 4)	45.16 (1147)	ø15.12 (ø384)	13.39 (340)	9.06 (230)	556 (252)	52.01 (1321)	ø15.28 (ø388)	13.39 (340)	15.91 (404)	12.13 (308)	-	653 (296)
LHYM40-4D185Y-EP	40 x 4 (30 x 4)	50.04 (1271)	ø15.12 (ø384)	13.39 (340)	9.06 (230)	556 (252)	56.89 (1445)	ø15.28 (ø388)	13.39 (340)	15.91 (404)	12.13 (308)	-	653 (296)
LHYM50-4D185Y-EP	50 x 4 (37 x 4)	50.04 (1271)	ø15.12 (ø384)	13.39 (340)	9.06 (230)	556 (252)	-	-	-	-	-	-	-
LHYM5-4E175Y-EP	5 x 4 (3.7 x 4)	40.07 (1018)	□8.74 (□222)	7.34 (186)	4.65 (118)	796 (361)	43.64 (1108)	□8.74 (□222)	7.34 (186)	8.21 (209)	6.02 (153)	6.30 (160)	820 (372)
LHYM8-4E175Y-EP	7.5 x 4 (5.5 x 4)	41.77 (1061)	□8.74 (□222)	7.34 (186)	4.65 (118)	830 (377)	45.33 (1151)	□8.74 (□222)	7.34 (186)	8.21 (209)	6.02 (153)	6.30 (160)	854 (387)
LHYM10-4E175Y-EP	10 x 4 (7.5 x 4)	42.59 (1082)	□10.24 (□260)	9.04 (230)	5.43 (138)	859 (390)	46.73 (1187)	□10.24 (□260)	9.04 (230)	9.57 (243)	7.44 (189)	7.32 (186)	903 (410)
LHYM15-4E175Y-EP	15 x 4 (11 x 4)	45.03 (1144)	□10.24 (□260)	9.04 (230)	5.43 (138)	871 (395)	49.17 (1249)	□10.24 (□260)	9.04 (230)	9.57 (243)	7.44 (189)	7.32 (186)	916 (416)
LHYM20-4E175Y-EP	20 x 4 (15 x 4)	47.75 (1213)	ø12.49 (ø317)	10.26 (261)	7.01 (178)	952 (432)	53.05 (1347)	ø12.61 (ø320)	10.26 (261)	12.30 (313)	9.53 (242)	-	1038 (471)
LHYM25-4E175Y-EP	25 x 4 (18.5 x 4)	51.92 (1319)	ø15.12 (ø384)	13.39 (340)	9.06 (230)	1231 (559)	58.77 (1493)	ø15.28 (ø388)	13.39 (340)	15.91 (404)	12.13 (308)	-	1328 (603)
LHYM30-4E175Y-EP	30 x 4 (22 x 4)	51.92 (1319)	ø15.12 (ø384)	13.39 (340)	9.06 (230)	1231 (559)	58.77 (1493)	ø15.28 (ø388)	13.39 (340)	15.91 (404)	12.13 (308)	-	1328 (603)
LHYM40-4E175Y-EP	40 x 4 (30 x 4)	56.81 (1443)	ø15.12 (ø384)	13.39 (340)	9.06 (230)	1344 (610)	63.66 (1617)	ø15.28 (ø388)	13.39 (340)	15.91 (404)	12.13 (308)	-	1441 (654)
LHYM5-4E185Y-EP	5 x 4 (3.7 x 4)	40.20 (1021)	□8.74 (□222)	7.34 (186)	4.65 (118)	839 (381)	43.76 (1112)	□8.74 (□222)	7.34 (186)	8.21 (209)	6.02 (153)	6.30 (160)	863 (392)
LHYM8-4E185Y-EP	7.5 x 4 (5.5 x 4)	41.89 (1064)	□8.74 (□222)	7.34 (186)	4.65 (118)	873 (396)	45.45 (1155)	□8.74 (□222)	7.34 (186)	8.21 (209)	6.02 (153)	6.30 (160)	897 (407)
LHYM10-4E185Y-EP	10 x 4 (7.5 x 4)	42.83 (1088)	□10.24 (□260)	9.04 (230)	5.43 (138)	903 (410)	46.97 (1193)	□10.24 (□260)	9.04 (230)	9.57 (243)	7.44 (189)	7.32 (186)	948 (430)
LHYM15-4E185Y-EP	15 x 4 (11 x 4)	45.28 (1150)	□10.24 (□260)	9.04 (230)	5.43 (138)	916 (416)	49.41 (1255)	□10.24 (□260)	9.04 (230)	9.57 (243)	7.44 (189)	7.32 (186)	960 (436)
LHYM20-4E185Y-EP	20 x 4 (15 x 4)	47.87 (1216)	ø12.49 (ø317)	10.26 (261)	7.01 (178)	996 (452)	53.17 (1351)	ø12.61 (ø320)	10.26 (261)	12.30 (313)	9.53 (242)	-	1082 (491)
LHYM25-4E185Y-EP	25 x 4 (18.5 x 4)	52.05 (1322)	ø15.12 (ø384)	13.39 (340)	9.06 (230)	1273 (578)	58.90 (1496)	ø15.28 (ø388)	13.39 (340)	15.91 (404)	12.13 (308)	-	1370 (622)
LHYM30-4E185Y-EP	30 x 4 (22 x 4)	52.05 (1322)	ø15.12 (ø384)	13.39 (340)	9.06 (230)	1273 (578)	58.90 (1496)	ø15.28 (ø388)	13.39 (340)	15.91 (404)	12.13 (308)	-	1370 (622)
LHYM40-4E185Y-EP	40 x 4 (30 x 4)	56.93 (1446)	ø15.12 (ø384)	13.39 (340)	9.06 (230)	1386 (629)	63.78 (1620)	ø15.28 (ø388)	13.39 (340)	15.91 (404)	12.13 (308)	-	1483 (673)
LHYM50-4E185Y-EP	50 x 4 (37 x 4)	56.93 (1446)	ø15.12 (ø384)	13.39 (340)	9.06 (230)	1454 (660)	-	-	-	-	-	-	-
LHYM10-4E195Y-EP	10 x 4 (7.5 x 4)	43.46 (1104)	□10.24 (□260)	9.04 (230)	5.43 (138)	974 (442)	47.60 (1209)	□10.24 (□260)	9.04 (230)	9.57 (243)	7.44 (189)	7.32 (186)	1018 (462)
LHYM15-4E195Y-EP	15 x 4 (11 x 4)	45.91 (1166)	□10.24 (□260)	9.04 (230)	5.43 (138)	986 (448)	50.04 (1271)	□10.24 (□260)	9.04 (230)	9.57 (243)	7.44 (189)	7.32 (186)	1031 (468)
LHYM20-4E195Y-EP	20 x 4 (15 x 4)	48.62 (1235)	ø12.49 (ø317)	10.26 (261)	7.01 (178)	1065 (483)	53.92 (1370)	ø12.61 (ø320)	10.26 (261)	12.30 (313)	9.53 (242)	-	1151 (522)
LHYM25-4E195Y-EP	25 x 4 (18.5 x 4)	52.80 (1341)	ø15.12 (ø384)	13.39 (340)	9.06 (230)	1343 (609)	59.65 (1515)	ø15.28 (ø388)	13.39 (340)	15.91 (404)	12.13 (308)	-	1440 (653)
LHYM30-4E195Y-EP	30 x 4 (22 x 4)	52.80 (1341)	ø15.12 (ø384)	13.39 (340)	9.06 (230)	1343 (609)	59.65 (1515)	ø15.28 (ø388)	13.39 (340)	15.91 (404)	12.13 (308)	-	1440 (653)
LHYM40-4E195Y-EP	40 x 4 (30 x 4)	57.68 (1465)	ø15.12 (ø384)	13.39 (340)	9.06 (230)	1456 (661)	64.53 (1639)	ø15.28 (ø388)	13.39 (340)	15.91 (404)	12.13 (308)	-	1553 (705)
LHYM50-4E195Y-EP	50 x 4 (37 x 4)	57.68 (1465)	ø15.12 (ø384)	13.39 (340)	9.06 (230)	1524 (692)	-	-	-	-	-	-	-

Notes [1]: DM Dimension Symbol ø = Round Fan Cover
DM Dimension Symbol □= Square Fan Cover

LXXX-4XX0/4XX5 Frame sizes have equal dimensions, different ratings.

Dimensions show are for reference only and are subject to change without notice, unless certified.
Certified prints are available after receipt of an order; consult factory.

Dimensions

Single Reduction Cyclo®
LHYM-4E190Y~4F195Y

Minimum Engagement		
Frame Size	TT	
	inch	*(mm)*
4E	14.13	*(359)*
4F	16.22	*(412)*

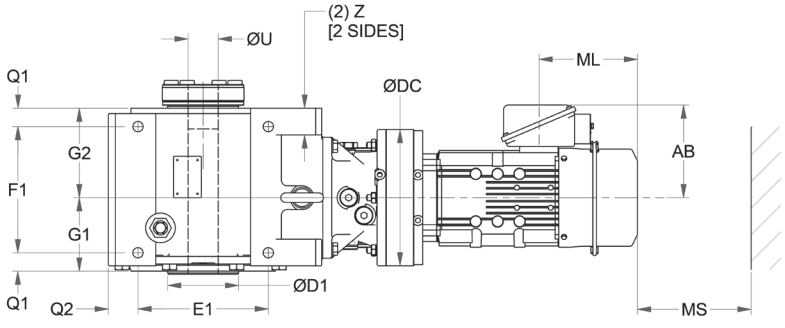

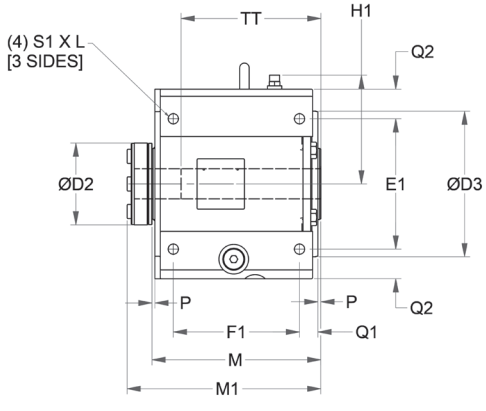

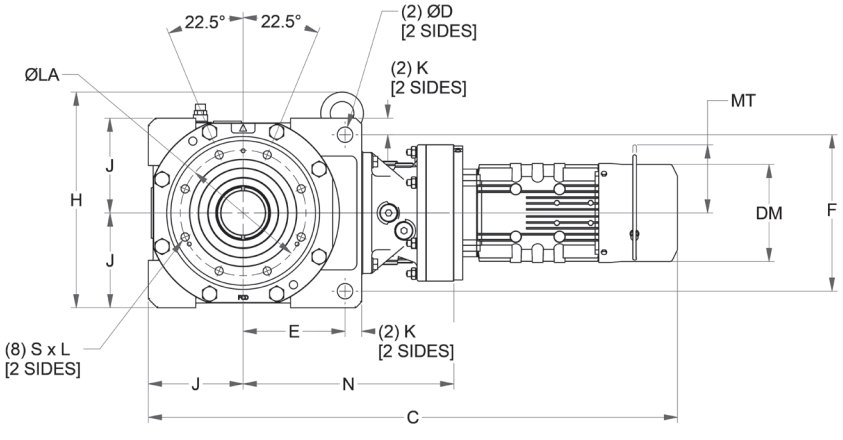

All dimensions are in inches *(mm)*.
For units ordered in the Y2 mounting configuration, please refer to page 2.115 for external lubricant piping dimensions.

Model	N	ØDC	J	E	F	K	Z	ØD	E1	F1	Q1	Q2	S1 x L
4E190, 4E195	19.3 *(490)*	16.9 *(430)*	8.46 *(215)*	9.06 *(230)*	14.2 *(360)*	1.4 *(35)*	2.2 *(55)*	1.3 *(33)*	11.8 *(300)*	11.1 *(283)*	1.5 *(38)*	2.6 *(65)*	M24 x 1.57 *(M24 x 40)*
4F180, 4F185	21.1 *(535)*	14.6 *(370)*	9.45 *(240)*	9.92 *(252)*	15.8 *(400)*	1.8 *(45)*	2.8 *(70)*	1.5 *(39)*	13.4 *(340)*	12.6 *(320)*	1.99 *(50.5)*	2.8 *(70)*	M30 x 1.97 *(M30 x 50)*
4F190, 4F195	21.7 *(552)*	16.9 *(430)*											

												ØU	
Model	**M**	**P**	**G1**	**G2**	**H**	**H1**	**ØLA**	**ØD3**	**S x L**	**M1**	**ØD1**	**ØD2**	**Std & Max**	**Min**
4E190, 4E195	14.7 *(373)*	0.3 *(7)*	6.14 *(156)*	7.99 *(203)*	19.6 *(498)*	9.37 *(238)*	11.0 *(280)*	12.6 *(320)*	M20 x 1.38 *(M20 x 35)*	16.3 *(414)*	6.30 *(160)*	6.69 *(170)*	3-15/16 *(100)*	2-15/16 *(74.61)*
4F180, 4F185 4F190, 4F195	17.1 *(435)*	0.3 *(7)*	9.37 *(238)*	7.20 *(183)*	23.2 *(590)*	10.8 *(273)*	12.6 *(320)*	14.6 *(370)*	M24 x 1.57 *(M24 x 40)*	19.1 *(486)*	7.09 *(180)*	7.32 *(186)*	4-15/16 *(125.413)*	3-15/16 *(100.013)*

LHYM30-4E195Y-EP ▶ LHYM60-4F195Y-EP

All dimensions are in inches *(mm)*

Model	4 Pole Motor HP *(kW)*	Without Brake					With Brake						
		C	DM [1]	AB	ML	Weight lb *(kg)*	C	DM [1]	AB	ML	MS	MT	Weight lb *(kg)*
LHYM60-4E195Y-EP	60 x 4 (45 x 4)	59.13 (1502)	ø18.66 (ø474)	16.33 (415)	16.81 (427)	1653 (750)	-	-	-	-	-	-	-
LHYM5-4F185Y-EP	5 x 4 (3.7 x 4)	43.68 (1109)	□8.74 (□222)	7.34 (186)	4.65 (118)	1273 (578)	47.24 (1200)	□8.74 (□222)	7.34 (186)	8.21 (209)	6.02 (153)	6.30 (160)	1297 (588)
LHYM8-4F185Y-EP	7.5 x 4 (5.5 x 4)	45.37 (1152)	□8.74 (□222)	7.34 (186)	4.65 (118)	1307 (593)	48.93 (1243)	□8.74 (□222)	7.34 (186)	8.21 (209)	6.02 (153)	6.30 (160)	1331 (604)
LHYM10-4F185Y-EP	10 x 4 (7.5 x 4)	46.31 (1176)	□10.24 (□260)	9.04 (230)	5.43 (138)	1337 (607)	50.45 (1281)	□10.24 (□260)	9.04 (230)	9.57 (243)	7.44 (189)	7.32 (186)	1381 (627)
LHYM15-4F185Y-EP	15 x 4 (11 x 4)	48.75 (1238)	□10.24 (□260)	9.04 (230)	5.43 (138)	1350 (613)	52.89 (1343)	□10.24 (□260)	9.04 (230)	9.57 (243)	7.44 (189)	7.32 (186)	1394 (633)
LHYM20-4F185Y-EP	20 x 4 (15 x 4)	51.35 (1304)	ø12.49 (ø317)	10.26 (261)	7.01 (178)	1430 (649)	56.65 (1439)	ø12.61 (ø320)	10.26 (261)	12.30 (313)	9.53 (242)	-	1516 (688)
LHYM25-4F185Y-EP	25 x 4 (18.5 x 4)	55.53 (1410)	ø15.12 (ø384)	13.39 (340)	9.06 (230)	1707 (774)	62.38 (1584)	ø15.28 (ø388)	13.39 (340)	15.91 (404)	12.13 (308)	-	1804 (818)
LHYM30-4F185Y-EP	30 x 4 (22 x 4)	55.53 (1410)	ø15.12 (ø384)	13.39 (340)	9.06 (230)	1707 (774)	62.38 (1584)	ø15.28 (ø388)	13.39 (340)	15.91 (404)	12.13 (308)	-	1804 (818)
LHYM40-4F185Y-EP	40 x 4 (30 x 4)	60.41 (1534)	ø15.12 (ø384)	13.39 (340)	9.06 (230)	1820 (826)	67.26 (1708)	ø15.28 (ø388)	13.39 (340)	15.91 (404)	12.13 (308)	-	1917 (870)
LHYM50-4F185Y-EP	50 x 4 (37 x 4)	60.41 (1534)	ø15.12 (ø384)	13.39 (340)	9.06 (230)	1888 (857)	-	-	-	-	-	-	-
LHYM5-4F195Y-EP	5 x 4 (3.7 x 4)	44.96 (1142)	□8.74 (□222)	7.34 (186)	4.65 (118)	1337 (607)	48.52 (1233)	□8.74 (□222)	7.34 (186)	8.21 (209)	6.02 (153)	6.30 (160)	1360 (617)
LHYM8-4F195Y-EP	7.5 x 4 (5.5 x 4)	46.65 (1185)	□8.74 (□222)	7.34 (186)	4.65 (118)	1370 (622)	50.22 (1276)	□8.74 (□222)	7.34 (186)	8.21 (209)	6.02 (153)	6.30 (160)	1394 (633)
LHYM10-4F195Y-EP	10 x 4 (7.5 x 4)	46.89 (1191)	□10.24 (□260)	9.04 (230)	5.43 (138)	1401 (636)	51.02 (1296)	□10.24 (□260)	9.04 (230)	9.57 (243)	7.44 (189)	7.32 (186)	1445 (656)
LHYM15-4F195Y-EP	15 x 4 (11 x 4)	49.33 (1253)	□10.24 (□260)	9.04 (230)	5.43 (138)	1414 (641)	53.46 (1358)	□10.24 (□260)	9.04 (230)	9.57 (243)	7.44 (189)	7.32 (186)	1458 (662)
LHYM20-4F195Y-EP	20 x 4 (15 x 4)	52.05 (1322)	ø12.49 (ø317)	10.26 (261)	7.01 (178)	1492 (677)	57.34 (1457)	ø12.61 (ø320)	10.26 (261)	12.30 (313)	9.53 (242)	-	1578 (716)
LHYM25-4F195Y-EP	25 x 4 (18.5 x 4)	56.22 (1428)	ø15.12 (ø384)	13.39 (340)	9.06 (230)	1770 (803)	63.07 (1602)	ø15.28 (ø388)	13.39 (340)	15.91 (404)	12.13 (308)	-	1867 (847)
LHYM30-4F195Y-EP	30 x 4 (22 x 4)	56.22 (1428)	ø15.12 (ø384)	13.39 (340)	9.06 (230)	1770 (803)	63.07 (1602)	ø15.28 (ø388)	13.39 (340)	15.91 (404)	12.13 (308)	-	1867 (847)
LHYM40-4F195Y-EP	40 x 4 (30 x 4)	61.10 (1552)	ø15.12 (ø384)	13.39 (340)	9.06 (230)	1883 (855)	67.95 (1726)	ø15.28 (ø388)	13.39 (340)	15.91 (404)	12.13 (308)	-	1980 (899)
LHYM50-4F195Y-EP	50 x 4 (37 x 4)	61.10 (1552)	ø15.12 (ø384)	13.39 (340)	9.06 (230)	1952 (886)	-	-	-	-	-	-	-
LHYM60-4F195Y-EP	60 x 4 (45 x 4)	62.56 (1589)	ø18.66 (ø474)	16.33 (415)	16.81 (427)	2080 (944)	-	-	-	-	-	-	-

Sold & Serviced By:
ELECTROMATE
Toll Free Phone (877) SERV098
www.electromate.com
sales@electromate.com

Notes [1]: DM Dimension Symbol ø = Round Fan Cover
DM Dimension Symbol □= Square Fan Cover

LXXX-4XX0/4XX5 Frame sizes have equal dimensions, different ratings.

Dimensions show are for reference only and are subject to change without notice, unless certified.
Certified prints are available after receipt of an order; consult factory.

Dimensions

Single Reduction Cyclo®, Y2 Mounting External Lubricant Piping
LHY(J)-4A100 ~ 4F195

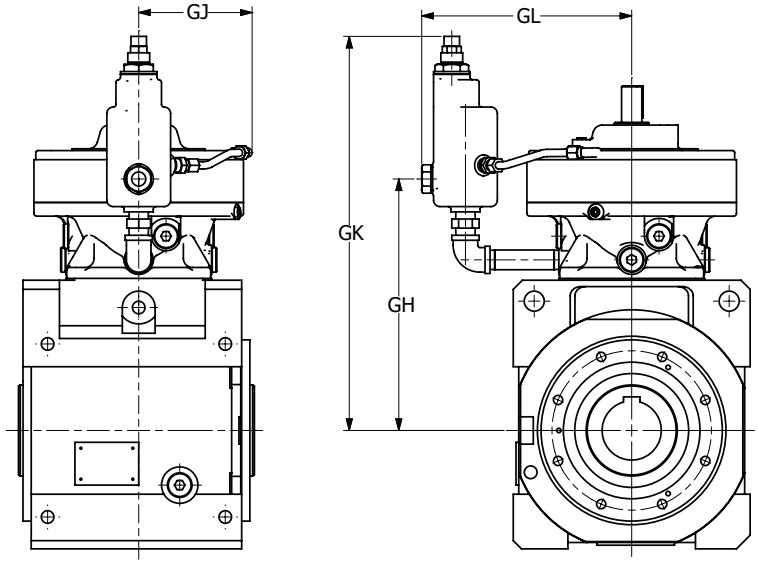

All dimensions are in inches *(mm)*.

Frame Size	GJ	GL	GH	GK
4A100	3.86	5.98	8.66	13.3
4A105	*(98)*	*(152)*	*(220)*	*(339)*
4A110	4.02	6.85	8.98	13.7
4A115	*(102)*	*(174)*	*(228)*	*(347)*
4A120	6.38	7.99	8.90	14.3
4A125	*(162)*	*(203)*	*(226)*	*(364)*
4A140	6.46	9.09	9.61	15.8
4A145	*(164)*	*(231)*	*(244)*	*(401)*
4B120	6.38	7.99	10.4	15.8
4B125	*(162)*	*(203)*	*(263)*	*(401)*
4B140	6.46	9.09	10.9	17.0
4B145	*(164)*	*(231)*	*(276)*	*(433)*
4B160	7.09	10.3	11.5	17.7
4B165	*(180)*	*(261)*	*(293)*	*(450)*
4C140	6.46	9.09	13.1	19.3
4C145	*(164)*	*(231)*	*(334)*	*(491)*
4C160	7.09	10.3	13.5	19.7
4C165	*(180)*	*(261)*	*(344)*	*(501)*
4C170	7.95	11.4	14.1	22.2
4C175	*(202)*	*(289)*	*(358)*	*(565)*
4D160	7.09	10.3	16.4	22.6
4D165	*(180)*	*(261)*	*(416)*	*(573)*
4D170	7.95	11.4	16.1	24.2
4D175	*(202)*	*(289)*	*(408)*	*(615)*
4D180	9.06	12.4	16.2	27.0
4D185	*(230)*	*(314)*	*(411)*	*(687)*
4E170	7.95	11.4	17.0	25.2
4E175	*(202)*	*(289)*	*(433)*	*(640)*
4E180	9.06	12.4	17.2	27.7
4E185	*(230)*	*(314)*	*(436)*	*(703)*
4E190	10.2	14.0	17.7	28.2
4E195	*(260)*	*(355)*	*(450)*	*(717)*
4F180	9.06	12.4	19.6	30.2
4F185	*(230)*	*(314)*	*(499)*	*(766)*
4F190	10.2	14.0	20.2	30.7
4F195	*(260)*	*(355)*	*(512)*	*(779)*

Dimensions shown are for reference only and are subject to change without notice, unless certified. Certified prints are available after receipt of an order; consult factory.

Page intentionally left blank.

Sold & Serviced By:
ELECTROMATE
Toll Free Phone (877) SERVO98
www.electromate.com
sales@electromate.com

Dimensions

Double Reduction Cyclo®
LHYM-4A10DAY~4B12DAY

Minimum Engagement		
Frame Size	TT	
	inch	*(mm)*
4A	8.19	*(300)*
4B	9.53	*(242)*

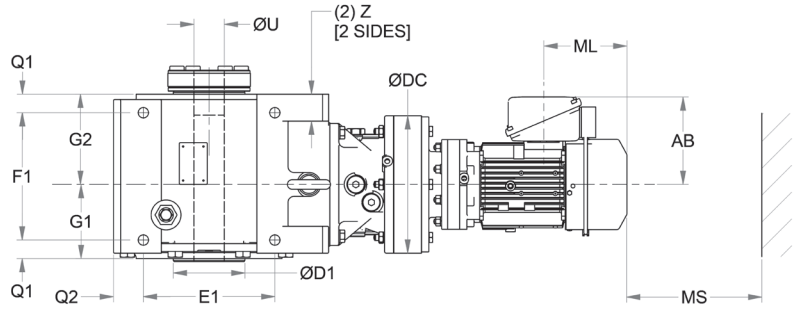

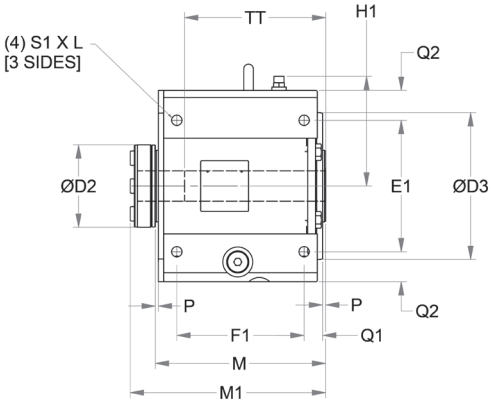

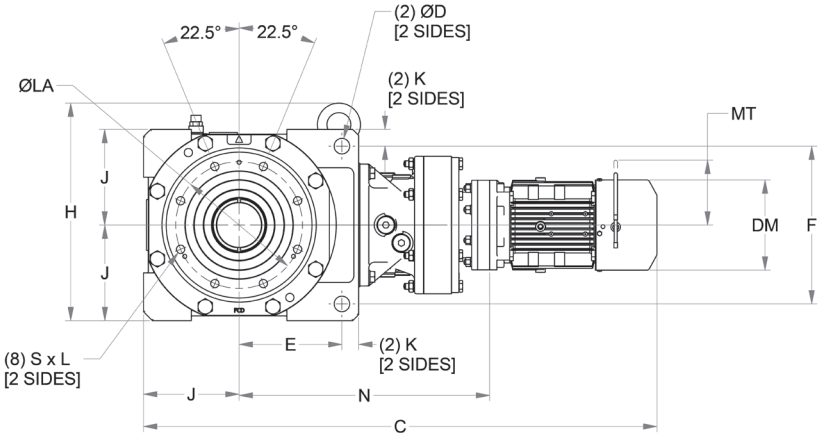

All dimensions are in inches *(mm)*.
For double reduction units ordered in the Y2 mounting configuration, please refer to page 2.133 for external lubricant piping dimensions.

Model	N	ØDC	J	E	F	K	Z	ØD	E1	F1	Q1	Q2	S1 x L	M
4A10DA	11.2 *(285)*	5.91 *(150)*	4.33 *(110)*	4.49 *(114)*	7.24 *(184)*	0.71 *(18)*	1.38 *(35)*	0.71 *(18)*	5.91 *(150)*	6.30 *(160)*	0.91 *(23)*	1.38 *(23)*	M12 x 0.79 *(M12 x 20)*	8.50 *(216)*
4A12DA	11.7 *(297)*	8.03 *(204)*												
4A12DB	12.2 *(309)*	8.03 *(204)*												
4B12DA	13.2 *(334)*	8.03 *(204)*	5.12 (120)	5.59 (142)	8.43 (214)	0.91 (23)	1.58 (40)	0.87 (22)	7.48 (190)	7.68 (195)	1.06 (27)	1.38 (35)	M16 x 1.02 (M16 x 26)	10.20 (259)

												ØU	
Model	**P**	**G1**	**G2**	**H**	**H1**	**ØLA**	**ØD3**	**S x L**	**M1**	**ØD1**	**ØD2**	**Std & Max**	**Min**
4A10DB, 4A12DA, 4A12DB	0.20 *(5)*	3.78 *(96)*	4.33 *(110)*	10.87 *(276)*	5.16 *(131)*	6.10 *(155)*	6.89 *(175)*	M10 x 0.67 *(M10 x 17)*	9.84 *(250)*	3.35 *(85)*	4.09 *(104)*	2-3/16 *(55.56)*	1-11/16 *(42.86)*
4B12DA	0.20 *(5)*	4.80 *(122)*	5.00 *(127)*	12.1 *(308)*	5.94 *(151)*	6.89 *(175)*	7.83 *(199)*	M12 x 0.79 *(M12 x 20)*	11.5 *(293)*	3.94 *(100)*	4.49 *(114)*	2-7/16 *(61.91)*	1-15/16 *(49.21)*

LHYM01-4A10DAY ► LHYM05-4B12DAY

All dimensions are in inches *(mm)*

Model	4 Pole Motor HP *(kW)*	Without Brake					With Brake						
		C	DM [1]	AB	ML	Weight lb *(kg)*	C	DM [1]	AB	ML	MS	MT	Weight lb *(kg)*
LHYM01-4A10DAY	1/8 x 4 (0.1 x 4)	20.84 (529)	ø4.69 (ø119)	4.63 (118)	1.38 (35)	120 (55)	22.22 (564)	ø4.88 (ø124)	4.63 (118)	2.76 (70)	1.93 (49)	-	124 (56)
LHYM01-4A10DAY-AV	1/8 x 4 (0.1 x 4)	22.49 (571)	ø4.88 (ø124)	4.63 (118)	2.32 (59)	123 (56)	23.75 (603)	ø4.88 (ø124)	4.63 (118)	3.58 (91)	2.40 (61)	-	126 (57)
LHYM02-4A10DAY	1/4 x 4 (0.2 x 4)	22.49 (571)	ø4.88 (ø124)	4.63 (118)	2.32 (59)	123 (56)	23.75 (603)	ø4.88 (ø124)	4.63 (118)	3.58 (91)	2.40 (61)	-	126 (57)
LHYM02-4A10DAY-AV	1/4 x 4 (0.2 x 4)	23.28 (591)	ø4.88 (ø124)	4.63 (118)	2.32 (59)	126 (57)	24.54 (623)	ø4.88 (ø124)	4.63 (118)	3.58 (91)	2.40 (61)	-	129 (59)
LHYM03-4A10DAY	1/3 x 4 (0.25 x 4)	22.49 (571)	ø4.88 (ø124)	4.63 (118)	2.32 (59)	123 (56)	23.75 (603)	ø4.88 (ø124)	4.63 (118)	3.58 (91)	2.40 (61)	-	126 (57)
LHYM03-4A10DAY-AV	1/3 x 4 (0.25 x 4)	23.28 (591)	ø4.88 (ø124)	4.63 (118)	2.32 (59)	126 (57)	24.54 (623)	ø4.88 (ø124)	4.63 (118)	3.58 (91)	2.40 (61)	-	129 (59)
LHYM05-4A10DAY	1/2 x 4 (0.4 x 4)	23.28 (591)	ø4.88 (ø124)	4.63 (118)	2.32 (59)	126 (57)	24.54 (623)	ø4.88 (ø124)	4.63 (118)	3.58 (91)	2.40 (61)	-	129 (59)
LHYM01-4A12DAY	1/8 x 4 (0.1 x 4)	21.30 (541)	ø4.69 (ø119)	4.63 (118)	1.38 (35)	138 (63)	22.68 (576)	ø4.88 (ø124)	4.63 (118)	2.76 (70)	1.93 (49)	-	141 (64)
LHYM01-4A12DAY-AV	1/8 x 4 (0.1 x 4)	22.96 (583)	ø4.88 (ø124)	4.63 (118)	2.32 (59)	140 (64)	24.22 (615)	ø4.88 (ø124)	4.63 (118)	3.58 (91)	2.40 (61)	-	143 (65)
LHYM01-4A12DBY	1/8 x 4 (0.1 x 4)	21.76 (553)	ø4.69 (ø119)	4.63 (118)	1.38 (35)	143 (65)	23.13 (588)	ø4.88 (ø124)	4.63 (118)	2.76 (70)	1.93 (49)	-	146 (67)
LHYM01-4A12DBY-AV	1/8 x 4 (0.1 x 4)	23.41 (595)	ø4.88 (ø124)	4.63 (118)	2.32 (59)	145 (66)	24.67 (627)	ø4.88 (ø124)	4.63 (118)	3.58 (91)	2.40 (61)	-	148 (67)
LHYM02-4A12DBY	1/4 x 4 (0.2 x 4)	23.41 (595)	ø4.88 (ø124)	4.63 (118)	2.32 (59)	145 (66)	24.67 (627)	ø4.88 (ø124)	4.63 (118)	3.58 (91)	2.40 (61)	-	148 (67)
LHYM02-4A12DBY-AV	1/4 x 4 (0.2 x 4)	24.20 (615)	ø4.88 (ø124)	4.63 (118)	2.32 (59)	148 (67)	25.46 (647)	ø4.88 (ø124)	4.63 (118)	3.58 (91)	2.40 (61)	-	151 (69)
LHYM03-4A12DBY	1/3 x 4 (0.25 x 4)	23.41 (595)	ø4.88 (ø124)	4.63 (118)	2.32 (59)	145 (66)	24.67 (627)	ø4.88 (ø124)	4.63 (118)	3.58 (91)	2.40 (61)	-	148 (67)
LHYM03-4A12DBY-AV	1/3 x 4 (0.25 x 4)	24.20 (615)	ø4.88 (ø124)	4.63 (118)	2.32 (59)	148 (67)	25.46 (647)	ø4.88 (ø124)	4.63 (118)	3.58 (91)	2.40 (61)	-	151 (69)
LHYM05-4A12DBY	1/2 x 4 (0.4 x 4)	24.20 (615)	ø4.88 (ø124)	4.63 (118)	2.32 (59)	148 (67)	25.46 (647)	ø4.88 (ø124)	4.63 (118)	3.58 (91)	2.40 (61)	-	151 (69)
LHYM05-4A12DBY-AV	1/2 x 4 (0.4 x 4)	25.81 (656)	ø5.94 (ø151)	5.67 (144)	3.82 (97)	155 (71)	27.50 (699)	ø5.94 (ø151)	5.67 (144)	5.51 (140)	3.66 (93)	3.94 (100)	161 (73)
LHYM08-4A12DBY	3/4 x 4 (0.55 x 4)	25.81 (656)	ø5.94 (ø151)	5.67 (144)	3.82 (97)	153 (70)	27.50 (699)	ø5.94 (ø151)	5.67 (144)	5.51 (140)	3.66 (93)	3.94 (100)	159 (72)
LHYM08-4A12DBY-AV	3/4 x 4 (0.55 x 4)	27.11 (689)	ø6.30 (ø160)	5.86 (149)	3.94 (100)	164 (75)	29.55 (751)	ø6.30 (ø160)	5.86 (149)	6.38 (162)	4.53 (115)	4.29 (109)	174 (79)
LHYM01-4B12DAY	1/8 x 4 (0.1 x 4)	23.54 (598)	ø4.69 (ø119)	4.63 (118)	1.38 (35)	203 (92)	24.91 (633)	ø4.88 (ø124)	4.63 (118)	2.76 (70)	1.93 (49)	-	206 (94)
LHYM01-4B12DAY-AV	1/8 x 4 (0.1 x 4)	25.19 (640)	ø4.88 (ø124)	4.63 (118)	2.32 (59)	205 (93)	26.45 (672)	ø4.88 (ø124)	4.63 (118)	3.58 (91)	2.40 (61)	-	208 (95)
LHYM02-4B12DAY	1/4 x 4 (0.2 x 4)	25.19 (640)	ø4.88 (ø124)	4.63 (118)	2.32 (59)	205 (93)	26.45 (672)	ø4.88 (ø124)	4.63 (118)	3.58 (91)	2.40 (61)	-	208 (95)
LHYM02-4B12DAY-AV	1/4 x 4 (0.2 x 4)	25.98 (660)	ø4.88 (ø124)	4.63 (118)	2.32 (59)	208 (95)	27.24 (692)	ø4.88 (ø124)	4.63 (118)	3.58 (91)	2.40 (61)	-	211 (96)
LHYM03-4B12DAY	1/3 x 4 (0.25 x 4)	25.19 (640)	ø4.88 (ø124)	4.63 (118)	2.32 (59)	205 (93)	26.45 (672)	ø4.88 (ø124)	4.63 (118)	3.58 (91)	2.40 (61)	-	208 (95)
LHYM03-4B12DAY-AV	1/3 x 4 (0.25 x 4)	25.98 (660)	ø4.88 (ø124)	4.63 (118)	2.32 (59)	208 (95)	27.24 (692)	ø4.88 (ø124)	4.63 (118)	3.58 (91)	2.40 (61)	-	211 (96)
LHYM05-4B12DAY	1/2 x 4 (0.4 x 4)	25.98 (660)	ø4.88 (ø124)	4.63 (118)	2.32 (59)	208 (95)	27.24 (692)	ø4.88 (ø124)	4.63 (118)	3.58 (91)	2.40 (61)	-	211 (96)
LHYM02-4B12DBY	1/4 x 4 (0.2 x 4)	25.64 (651)	ø4.88 (ø124)	4.63 (118)	2.32 (59)	210 (95)	26.90 (683)	ø4.88 (ø124)	4.63 (118)	3.58 (91)	2.40 (61)	-	213 (97)

Notes [1]: DM Dimension Symbol ø = Round Fan Cover
DM Dimension Symbol □= Square Fan Cover

LXXX-4XX0/4XX5 Frame sizes have equal dimensions, different ratings.

Dimensions show are for reference only and are subject to change without notice, unless certified.
Certified prints are available after receipt of an order; consult factory.

Dimensions

Double Reduction Cyclo®
LHYM-4B12DBY~4C14DAY

Minimum Engagement		
Frame Size	TT	
	inch	*(mm)*
4B	9.53	*(242)*
4C	10.98	*(279)*

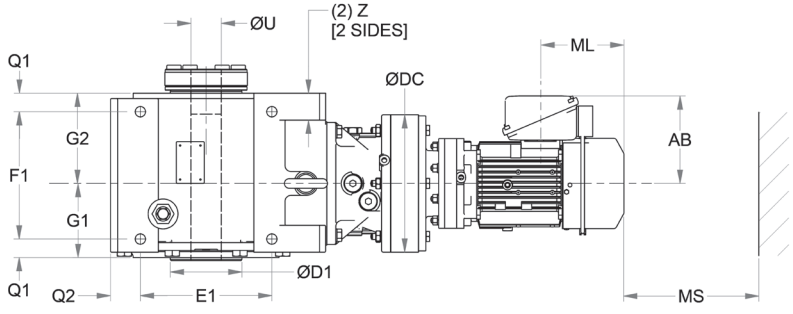

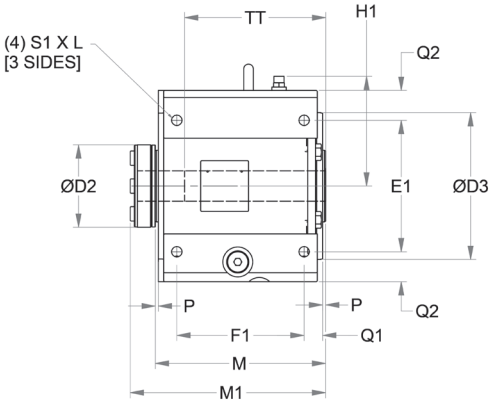

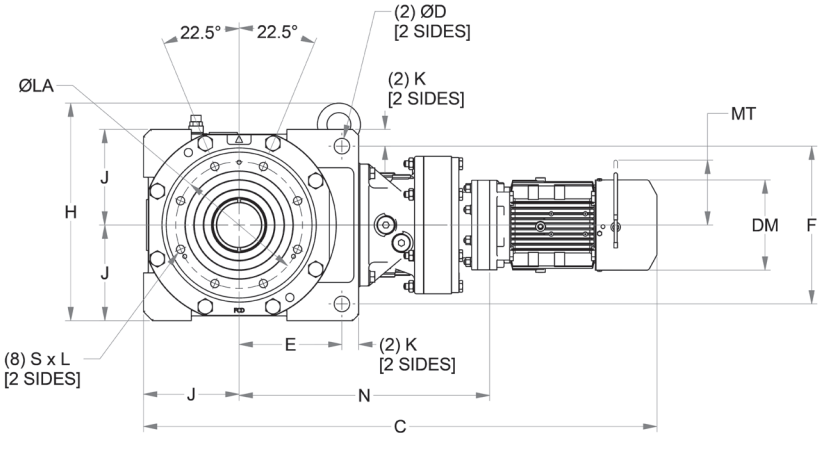

All dimensions are in inches *(mm)*.
For double reduction units ordered in the Y2 mounting configuration, please refer to page 2.133 for external lubricant piping dimensions.

Model	N	ØDC	J	E	F	K	Z	ØD	E1	F1	Q1	Q2	S1 x L	M
4B12DB	13.6 *(346)*	8.03 *(204)*	5.12 *(130)*	5.59 *(142)*	8.43 *(214)*	0.91 *(23)*	1.58 *(40)*	0.87 *(22)*	7.48 *(190)*	7.68 *(195)*	1.06 *(27)*	1.38 *(35)*	M16 x 1.02 *(M16 x 26)*	10.20 *(259)*
4B14DB	14.2 *(360)*	9.06 *(230)*												
4C14DA	16.1 *(410)*	9.06 *(230)*	6.30 *(160)*	6.77 *(172)*	10.4 *(264)*	1.10 *(28)*	1.77 *(45)*	1.02 *(26)*	8.66 *(220)*	8.39 *(213)*	1.22 *(31)*	1.97 *(50)*	M20 x 1.30 *(M20 x 30)*	11.2 *(285)*

												ØU	
Model	P	G1	G2	H	H1	ØLA	ØD3	S x L	M1	ØD1	ØD2	Std & Max	Min
4B12DB, 4B14DB	0.20 *(5)*	4.80 *(122)*	5.00 *(127)*	12.1 *(308)*	5.94 *(151)*	6.89 *(175)*	7.83 *(199)*	M12 x 0.79 *(M12 x 20)*	11.5 *(293)*	3.94 *(100)*	4.49 *(114)*	2-7/16 *(61.91)*	1-15/16 *(49.21)*
4C14DA	0.20 *(5)*	4.88 *(124)*	5.94 *(151)*	14.3 *(364)*	7.20 *(183)*	8.35 *(212)*	9.61 *(244)*	M16 x 1.02 *(M16 x 26)*	12.8 *(326)*	4.72 *(120)*	5.43 *(138)*	2-15/16 *(74.61)*	2-3/16 *(55.56)*

LHYM02-4B12DBY ► LHYM01-4C14DAY-AV

All dimensions are in inches *(mm)*

Model	4 Pole Motor HP *(kW)*	Without Brake					With Brake						
		C	DM [1]	AB	ML	Weight lb *(kg)*	C	DM [1]	AB	ML	MS	MT	Weight lb *(kg)*
LHYM02-4B12DBY-AV	1/4 x 4 (0.2 x 4)	26.43 (671)	ø4.88 (ø124)	4.63 (118)	2.32 (59)	213 (97)	27.69 (703)	ø4.88 (ø124)	4.63 (118)	3.58 (91)	2.40 (61)	-	216 (98)
LHYM03-4B12DBY	1/3 x 4 (0.25 x 4)	25.64 (651)	ø4.88 (ø124)	4.63 (118)	2.32 (59)	210 (95)	26.90 (683)	ø4.88 (ø124)	4.63 (118)	3.58 (91)	2.40 (61)	-	213 (97)
LHYM03-4B12DBY-AV	1/3 x 4 (0.25 x 4)	26.43 (671)	ø4.88 (ø124)	4.63 (118)	2.32 (59)	213 (97)	27.69 (703)	ø4.88 (ø124)	4.63 (118)	3.58 (91)	2.40 (61)	-	216 (98)
LHYM05-4B12DBY	1/2 x 4 (0.4 x 4)	26.43 (671)	ø4.88 (ø124)	4.63 (118)	2.32 (59)	213 (97)	27.69 (703)	ø4.88 (ø124)	4.63 (118)	3.58 (91)	2.40 (61)	-	216 (98)
LHYM05-4B12DBY-AV	1/2 x 4 (0.4 x 4)	28.04 (712)	ø5.94 (ø151)	5.67 (144)	3.82 (97)	220 (100)	29.74 (755)	ø5.94 (ø151)	5.67 (144)	5.51 (140)	3.66 (93)	3.94 (100)	226 (103)
LHYM08-4B12DBY	3/4 x 4 (0.55 x 4)	28.04 (712)	ø5.94 (ø151)	5.67 (144)	3.82 (97)	217 (99)	29.74 (755)	ø5.94 (ø151)	5.67 (144)	5.51 (140)	3.66 (93)	3.94 (100)	223 (102)
LHYM08-4B12DBY-AV	3/4 x 4 (0.55 x 4)	29.34 (745)	ø6.30 (ø160)	5.86 (149)	3.94 (100)	228 (104)	31.78 (807)	ø6.30 (ø160)	5.86 (149)	6.38 (162)	4.53 (115)	4.29 (109)	239 (109)
LHYM1-4B12DBY-EP	1 x 4 (0.75 x 4)	29.78 (756)	□6.22 (□158)	5.98 (152)	3.82 (97)	233 (106)	32.28 (820)	□6.22 (□158)	5.98 (152)	6.32 (161)	4.80 (122)	4.25 (108)	243 (110)
LHYM1H-4B12DBY-EP	1.5 x 4 (1.1 x 4)	30.84 (783)	□6.57 (□167)	6.16 (156)	3.82 (97)	241 (109)	33.57 (853)	□6.57 (□167)	6.16 (156)	6.56 (167)	5.04 (128)	4.61 (117)	252 (115)
LHYM01-4B14DAY	1/8 x 4 (0.1 x 4)	24.25 (616)	ø4.69 (ø119)	4.63 (118)	1.38 (35)	209 (95)	25.62 (651)	ø4.88 (ø124)	4.63 (118)	2.76 (70)	1.93 (49)	-	213 (97)
LHYM01-4B14DAY-AV	1/8 x 4 (0.1 x 4)	25.90 (658)	ø4.88 (ø124)	4.63 (118)	2.32 (59)	211 (96)	27.16 (690)	ø4.88 (ø124)	4.63 (118)	3.58 (91)	2.40 (61)	-	214 (98)
LHYM02-4B14DAY	1/4 x 4 (0.2 x 4)	25.90 (658)	ø4.88 (ø124)	4.63 (118)	2.32 (59)	211 (96)	27.16 (690)	ø4.88 (ø124)	4.63 (118)	3.58 (91)	2.40 (61)	-	214 (98)
LHYM02-4B14DAY-AV	1/4 x 4 (0.2 x 4)	26.69 (678)	ø4.88 (ø124)	4.63 (118)	2.32 (59)	214 (98)	27.95 (710)	ø4.88 (ø124)	4.63 (118)	3.58 (91)	2.40 (61)	-	218 (99)
LHYM02-4B14DBY	1/4 x 4 (0.2 x 4)	26.25 (667)	ø4.88 (ø124)	4.63 (118)	2.32 (59)	219 (99)	27.51 (699)	ø4.88 (ø124)	4.63 (118)	3.58 (91)	2.40 (61)	-	222 (101)
LHYM02-4B14DBY-AV	1/4 x 4 (0.2 x 4)	27.04 (687)	ø4.88 (ø124)	4.63 (118)	2.32 (59)	222 (101)	28.30 (719)	ø4.88 (ø124)	4.63 (118)	3.58 (91)	2.40 (61)	-	225 (102)
LHYM03-4B14DBY	1/3 x 4 (0.25 x 4)	26.25 (667)	ø4.88 (ø124)	4.63 (118)	2.32 (59)	219 (99)	27.51 (699)	ø4.88 (ø124)	4.63 (118)	3.58 (91)	2.40 (61)	-	222 (101)
LHYM03-4B14DBY-AV	1/3 x 4 (0.25 x 4)	27.04 (687)	ø4.88 (ø124)	4.63 (118)	2.32 (59)	222 (101)	28.30 (719)	ø4.88 (ø124)	4.63 (118)	3.58 (91)	2.40 (61)	-	225 (102)
LHYM05-4B14DBY	1/2 x 4 (0.4 x 4)	27.04 (687)	ø4.88 (ø124)	4.63 (118)	2.32 (59)	222 (101)	28.30 (719)	ø4.88 (ø124)	4.63 (118)	3.58 (91)	2.40 (61)	-	225 (102)
LHYM05-4B14DBY-AV	1/2 x 4 (0.4 x 4)	28.66 (728)	ø5.94 (ø151)	5.67 (144)	3.82 (97)	229 (104)	30.35 (771)	ø5.94 (ø151)	5.67 (144)	5.51 (140)	3.66 (93)	3.94 (100)	235 (107)
LHYM08-4B14DBY	3/4 x 4 (0.55 x 4)	28.66 (728)	ø5.94 (ø151)	5.67 (144)	3.82 (97)	226 (103)	30.35 (771)	ø5.94 (ø151)	5.67 (144)	5.51 (140)	3.66 (93)	3.94 (100)	232 (106)
LHYM08-4B14DBY-AV	3/4 x 4 (0.55 x 4)	29.95 (761)	ø6.30 (ø160)	5.86 (149)	3.94 (100)	237 (108)	32.40 (823)	ø6.30 (ø160)	5.86 (149)	6.38 (162)	4.53 (115)	4.29 (109)	248 (113)
LHYM1-4B14DBY-EP	1 x 4 (0.75 x 4)	30.39 (772)	□6.22 (□158)	5.98 (152)	3.82 (97)	242 (110)	32.89 (835)	□6.22 (□158)	5.98 (152)	6.32 (161)	4.80 (122)	4.25 (108)	252 (114)
LHYM1H-4B14DBY-EP	1.5 x 4 (1.1 x 4)	31.45 (799)	□6.57 (□167)	6.16 (156)	3.82 (97)	249 (113)	34.19 (868)	□6.57 (□167)	6.16 (156)	6.56 (167)	5.04 (128)	4.61 (117)	261 (119)
LHYM01-4C14DAY	1/8 x 4 (0.1 x 4)	27.72 (704)	ø4.69 (ø119)	4.63 (118)	1.38 (35)	316 (144)	29.10 (739)	ø4.88 (ø124)	4.63 (118)	2.76 (70)	1.93 (49)	-	319 (145)
LHYM01-4C14DAY-AV	1/8 x 4 (0.1 x 4)	29.37 (746)	ø4.88 (ø124)	4.63 (118)	2.32 (59)	318 (145)	30.63 (778)	ø4.88 (ø124)	4.63 (118)	3.58 (91)	2.40 (61)	-	321 (146)
LHYM02-4C14DAY	1/4 x 4 (0.2 x 4)	29.37 (746)	ø4.88 (ø124)	4.63 (118)	2.32 (59)	318 (145)	30.63 (778)	ø4.88 (ø124)	4.63 (118)	3.58 (91)	2.40 (61)	-	321 (146)
LHYM02-4C14DAY-AV	1/4 x 4 (0.2 x 4)	30.16 (766)	ø4.88 (ø124)	4.63 (118)	2.32 (59)	321 (146)	31.42 (798)	ø4.88 (ø124)	4.63 (118)	3.58 (91)	2.40 (61)	-	324 (147)

Notes [1]: DM Dimension Symbol ø = Round Fan Cover
DM Dimension Symbol □= Square Fan Cover

LXXX-4XX0/4XX5 Frame sizes have equal dimensions, different ratings.

Dimensions show are for reference only and are subject to change without notice, unless certified.
Certified prints are available after receipt of an order; consult factory.

Dimensions

Double Reduction Cyclo®
LHYM-4C14DBY~4C16DBY

Minimum Engagement		
Frame Size	TT	
	inch	*(mm)*
4C	10.98	*(279)*

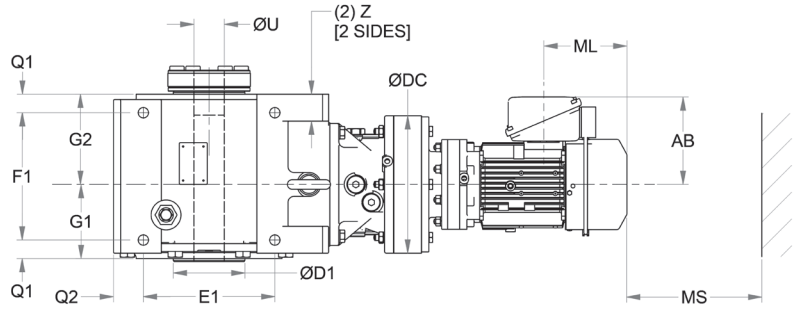

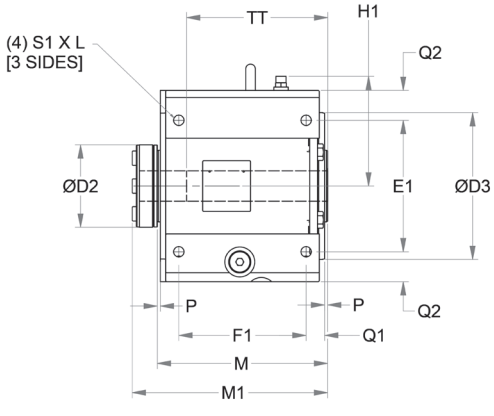

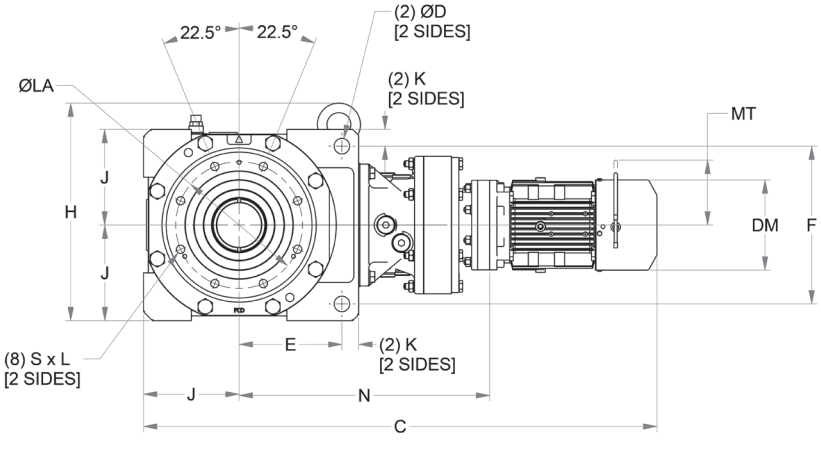

All dimensions are in inches *(mm)*.
For double reduction units ordered in the Y2 mounting configuration, please refer to page 2.133 for external lubricant piping dimensions.

Model	N	ØDC	J	E	F	K	Z	ØD	E1	F1	Q1	Q2	S1 x L	M
4C14DA	16.1 *(410)*	9.06 *(230)*	6.30 *(160)*	6.77 *(172)*	10.4 *(264)*	1.10 *(28)*	1.77 *(45)*	1.02 *(26)*	8.66 *(220)*	8.39 *(213)*	1.22 *(31)*	1.97 *(50)*	M20 x 1.30 *(M20 x 33)*	11.2 *(285)*
4C14DB	16.5 *(419)*	9.06 *(230)*												
4C14DC	17.1 *(433)*	9.06 *(230)*												
4C16DA	17.4 *(442)*	11.8 *(300)*												

												ØU	
Model	**P**	**G1**	**G2**	**H**	**H1**	**ØLA**	**ØD3**	**S x L**	**M1**	**ØD1**	**ØD2**	**Std & Max**	**Min**
4C14DA, 4C14DB, 4C14DC, 4C16DA	0.20 *(5)*	4.88 *(124)*	5.94 *(151)*	14.3 *(364)*	7.20 *(183)*	8.35 *(212)*	9.61 *(244)*	M16 x 1.02 *(M16 x 26)*	12.8 *(326)*	4.72 *(120)*	5.43 *(138)*	2-15/16 *(74.61)*	2-3/16 *(55.56)*

LHYM02-4C14DAY ► LHYM03-4C16DAY-AV

All dimensions are in inches *(mm)*

Model	4 Pole Motor HP *(kW)*	Without Brake					With Brake						
		C	DM [1]	AB	ML	Weight lb *(kg)*	C	DM [1]	AB	ML	MS	MT	Weight lb *(kg)*
LHYM03-4C14DAY	1/3 x 4 (0.25 x 4)	29.37 (746)	ø4.88 (ø124)	4.63 (118)	2.32 (59)	318 (145)	30.63 (778)	ø4.88 (ø124)	4.63 (118)	3.58 (91)	2.40 (61)	-	321 (146)
LHYM03-4C14DAY-AV	1/3 x 4 (0.25 x 4)	30.16 (766)	ø4.88 (ø124)	4.63 (118)	2.32 (59)	321 (146)	31.42 (798)	ø4.88 (ø124)	4.63 (118)	3.58 (91)	2.40 (61)	-	324 (147)
LHYM05-4C14DAY	1/2 x 4 (0.4 x 4)	30.16 (766)	ø4.88 (ø124)	4.63 (118)	2.32 (59)	321 (146)	31.42 (798)	ø4.88 (ø124)	4.63 (118)	3.58 (91)	2.40 (61)	-	324 (147)
LHYM02-4C14DBY	1/4 x 4 (0.2 x 4)	29.73 (755)	ø4.88 (ø124)	4.63 (118)	2.32 (59)	325 (148)	30.99 (787)	ø4.88 (ø124)	4.63 (118)	3.58 (91)	2.40 (61)	-	328 (149)
LHYM02-4C14DBY-AV	1/4 x 4 (0.2 x 4)	30.51 (775)	ø4.88 (ø124)	4.63 (118)	2.32 (59)	328 (149)	31.77 (807)	ø4.88 (ø124)	4.63 (118)	3.58 (91)	2.40 (61)	-	332 (151)
LHYM03-4C14DBY	1/3 x 4 (0.25 x 4)	29.73 (755)	ø4.88 (ø124)	4.63 (118)	2.32 (59)	325 (148)	30.99 (787)	ø4.88 (ø124)	4.63 (118)	3.58 (91)	2.40 (61)	-	328 (149)
LHYM03-4C14DBY-AV	1/3 x 4 (0.25 x 4)	30.51 (775)	ø4.88 (ø124)	4.63 (118)	2.32 (59)	328 (149)	31.77 (807)	ø4.88 (ø124)	4.63 (118)	3.58 (91)	2.40 (61)	-	332 (151)
LHYM05-4C14DBY	1/2 x 4 (0.4 x 4)	30.51 (775)	ø4.88 (ø124)	4.63 (118)	2.32 (59)	328 (149)	31.77 (807)	ø4.88 (ø124)	4.63 (118)	3.58 (91)	2.40 (61)	-	332 (151)
LHYM05-4C14DBY-AV	1/2 x 4 (0.4 x 4)	32.13 (816)	ø5.94 (ø151)	5.67 (144)	3.82 (97)	336 (153)	33.82 (859)	ø5.94 (ø151)	5.67 (144)	5.51 (140)	3.66 (93)	3.94 (100)	341 (155)
LHYM08-4C14DBY	3/4 x 4 (0.55 x 4)	32.13 (816)	ø5.94 (ø151)	5.67 (144)	3.82 (97)	333 (151)	33.82 (859)	ø5.94 (ø151)	5.67 (144)	5.51 (140)	3.66 (93)	3.94 (100)	339 (154)
LHYM08-4C14DBY-AV	3/4 x 4 (0.55 x 4)	33.43 (849)	ø6.30 (ø160)	5.86 (149)	3.94 (100)	344 (156)	35.87 (911)	ø6.30 (ø160)	5.86 (149)	6.38 (162)	4.53 (115)	4.29 (109)	355 (161)
LHYM1-4C14DBY-EP	1 x 4 (0.75 x 4)	33.86 (860)	□6.22 (□158)	5.98 (152)	3.82 (97)	349 (159)	36.36 (924)	□6.22 (□158)	5.98 (152)	6.32 (161)	4.80 (122)	4.25 (108)	359 (163)
LHYM1H-4C14DBY-EP	1.5 x 4 (1.1 x 4)	34.92 (887)	□6.57 (□167)	6.16 (156)	3.82 (97)	356 (162)	37.66 (957)	□6.57 (□167)	6.16 (156)	6.56 (167)	5.04 (128)	4.61 (117)	368 (167)
LHYM2-4C14DBY-EP	2 x 4 (1.5 x 4)	34.92 (887)	□6.57 (□167)	6.16 (156)	3.82 (97)	359 (163)	37.66 (957)	□6.57 (□167)	6.16 (156)	6.56 (167)	5.04 (128)	4.61 (117)	371 (168)
LHYM08-4C14DCY	3/4 x 4 (0.55 x 4)	32.68 (830)	ø5.94 (ø151)	5.67 (144)	3.82 (97)	336 (152)	34.37 (873)	ø5.94 (ø151)	5.67 (144)	5.51 (140)	3.66 (93)	3.94 (100)	341 (155)
LHYM08-4C14DCY-AV	3/4 x 4 (0.55 x 4)	33.98 (863)	ø6.30 (ø160)	5.86 (149)	3.94 (100)	346 (157)	36.42 (925)	ø6.30 (ø160)	5.86 (149)	6.38 (162)	4.53 (115)	4.29 (109)	357 (162)
LHYM1-4C14DCY-EP	1 x 4 (0.75 x 4)	34.41 (874)	□6.22 (□158)	5.98 (152)	3.82 (97)	351 (160)	36.91 (938)	□6.22 (□158)	5.98 (152)	6.32 (161)	4.80 (122)	4.25 (108)	361 (164)
LHYM1H-4C14DCY-EP	1.5 x 4 (1.1 x 4)	35.47 (901)	□6.57 (□167)	6.16 (156)	3.82 (97)	359 (163)	38.21 (971)	□6.57 (□167)	6.16 (156)	6.56 (167)	5.04 (128)	4.61 (117)	370 (168)
LHYM2-4C14DCY-EP	2 x 4 (1.5 x 4)	35.47 (901)	□6.57 (□167)	6.16 (156)	3.82 (97)	362 (164)	38.21 (971)	□6.57 (□167)	6.16 (156)	6.56 (167)	5.04 (128)	4.61 (117)	373 (170)
LHYM3-4C14DCY-EP	3 x 4 (2.2 x 4)	36.30 (922)	□7.24 (□184)	6.71 (170)	4.53 (115)	378 (172)	39.37 (1000)	□7.24 (□184)	6.71 (170)	7.60 (193)	5.43 (138)	5.04 (128)	394 (179)
LHYM02-4C16DAY	1/4 x 4 (0.2 x 4)	30.65 (778)	ø4.88 (ø124)	4.63 (118)	2.32 (59)	376 (171)	31.91 (810)	ø4.88 (ø124)	4.63 (118)	3.58 (91)	2.40 (61)	-	379 (172)
LHYM02-4C16DAY-AV	1/4 x 4 (0.2 x 4)	31.43 (798)	ø4.88 (ø124)	4.63 (118)	2.32 (59)	379 (172)	32.69 (830)	ø4.88 (ø124)	4.63 (118)	3.58 (91)	2.40 (61)	-	382 (174)
LHYM03-4C16DAY	1/3 x 4 (0.25 x 4)	30.65 (778)	ø4.88 (ø124)	4.63 (118)	2.32 (59)	376 (171)	31.91 (810)	ø4.88 (ø124)	4.63 (118)	3.58 (91)	2.40 (61)	-	379 (172)
LHYM03-4C16DAY-AV	1/3 x 4 (0.25 x 4)	31.43 (798)	ø4.88 (ø124)	4.63 (118)	2.32 (59)	379 (172)	32.69 (830)	ø4.88 (ø124)	4.63 (118)	3.58 (91)	2.40 (61)	-	382 (174)
LHYM05-4C16DAY	1/2 x 4 (0.4 x 4)	31.43 (798)	ø4.88 (ø124)	4.63 (118)	2.32 (59)	379 (172)	32.69 (830)	ø4.88 (ø124)	4.63 (118)	3.58 (91)	2.40 (61)	-	382 (174)
LHYM05-4C16DAY-AV	1/2 x 4 (0.4 x 4)	33.05 (839)	ø5.94 (ø151)	5.67 (144)	3.82 (97)	386 (176)	34.74 (882)	ø5.94 (ø151)	5.67 (144)	5.51 (140)	3.66 (93)	3.94 (100)	392 (178)
LHYM08-4C16DAY	3/4 x 4 (0.55 x 4)	33.05 (839)	ø5.94 (ø151)	5.67 (144)	3.82 (97)	384 (174)	34.74 (882)	ø5.94 (ø151)	5.67 (144)	5.51 (140)	3.66 (93)	3.94 (100)	390 (177)

Notes [1]: DM Dimension Symbol ø = Round Fan Cover
DM Dimension Symbol □= Square Fan Cover

LXXX-4XX0/4XX5 Frame sizes have equal dimensions, different ratings.

Dimensions show are for reference only and are subject to change without notice, unless certified.
Certified prints are available after receipt of an order; consult factory.

Dimensions

Double Reduction Cyclo®
LHYM-4C16DAY~4D16DBY

Minimum Engagement		
Frame Size	TT	
	inch	*(mm)*
4C	10.98	*(279)*
4D	12.83	*(326)*

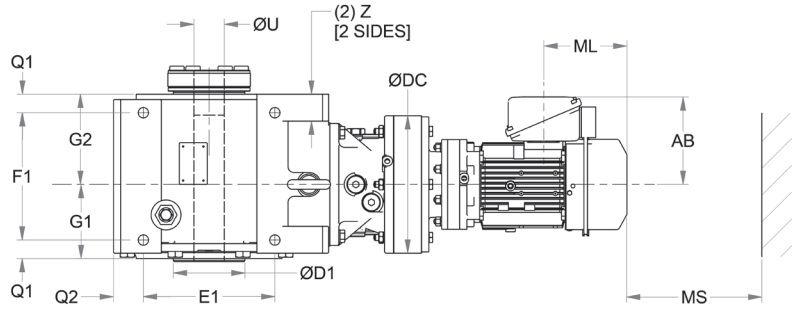

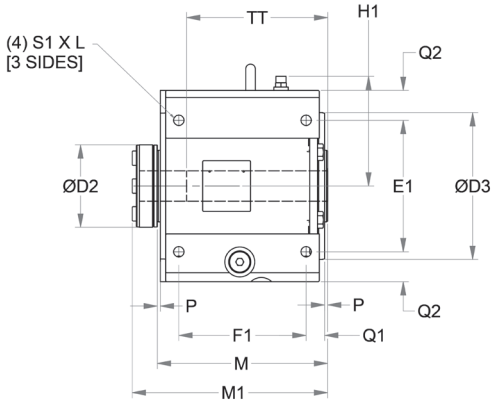

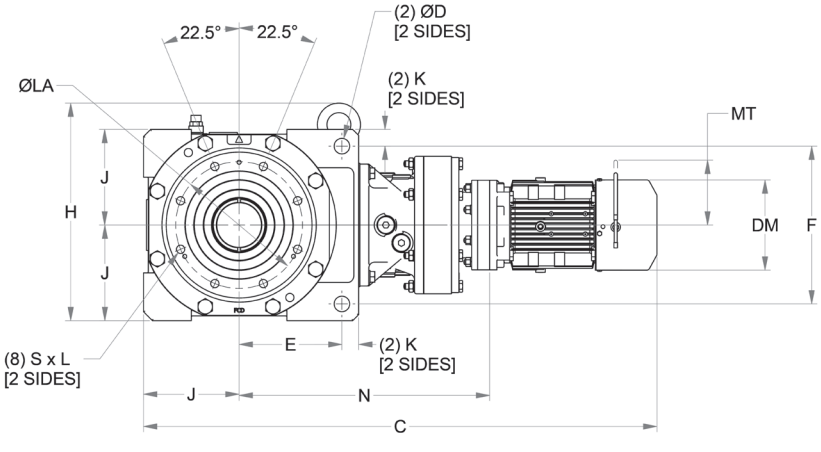

All dimensions are in inches *(mm)*.
For double reduction units ordered in the Y2 mounting configuration, please refer to page 2.133 for external lubricant piping dimensions.

Model	N	ØDC	J	E	F	K	Z	ØD	E1	F1	Q1	Q2	S1 x L	M
4C16DA	17.4 *(442)*	11.8 *(300)*	6.30 *(160)*	6.77 *(172)*	10.4 *(264)*	1.10 *(28)*	1.77 *(45)*	1.02 *(26)*	8.66 *(220)*	8.39 *(213)*	1.22 *(31)*	1.97 *(50)*	M20 x 1.30 *(M20 x 33)*	11.2 *(285)*
4C16DB	18.0 *(456)*	11.8 *(300)*												
4C16DC	18.0 *(458)*	11.8 *(300)*												
4D16DA	20.2 *(514)*	11.8 *(300)*	7.48 *(190)*	7.60 *(193)*	12.2 *(310)*	1.38 *(35)*	2.17 *(55)*	1.30 *(33)*	9.84 *(250)*	10.0 *(254)*	1.42 *(36)*	2.56 *(65)*	M24 x 1.57 *(M24 x 40)*	13.4 *(340)*
4D16DB	20.8 *(528)*	11.8 *(300)*												

												ØU	
Model	**P**	**G1**	**G2**	**H**	**H1**	**ØLA**	**ØD3**	**S x L**	**M1**	**ØD1**	**ØD2**	**Std & Max**	**Min**
4C16DA, 4C16DB, 4C16DC	0.20 *(5)*	4.88 *(124)*	5.94 *(151)*	14.3 *(364)*	7.20 *(183)*	8.35 *(212)*	9.61 *(244)*	M16 x 1.02 *(M16 x 26)*	12.8 *(326)*	4.72 *(120)*	5.43 *(138)*	2-15/16 *(74.61)*	2-3/16 *(55.56)*
4D16DA, 4D16DB	0.28 *(7)*	5.83 *(148)*	7.01 *(178)*	16.7 *(424)*	8.39 *(213)*	10.0 *(255)*	11.6 *(295)*	M20 x 1.30 *(M20 x 33)*	15.0 *(381)*	5.51 *(140)*	5.98 *(152)*	3-7/16 *(87.31)*	2-7/16 *(61.91)*

LHYM05-4C16DAY ► LHYM08-4D16DBY-AV

All dimensions are in inches *(mm)*

Model	4 Pole Motor HP *(kW)*	Without Brake					With Brake						
		C	DM [1]	AB	ML	Weight lb *(kg)*	C	DM [1]	AB	ML	MS	MT	Weight lb *(kg)*
LHYM08-4C16DAY-AV	3/4 x 4 (0.55 x 4)	34.35 (872)	ø6.30 (ø160)	5.86 (149)	3.94 (100)	395 (179)	36.79 (934)	ø6.30 (ø160)	5.86 (149)	6.38 (162)	4.53 (115)	4.29 (109)	405 (184)
LHYM1-4C16DAY-EP	1 x 4 (0.75 x 4)	34.78 (883)	□6.22 (□158)	5.98 (152)	3.82 (97)	400 (182)	37.28 (947)	□6.22 (□158)	5.98 (152)	6.32 (161)	4.80 (122)	4.25 (108)	409 (186)
LHYM1H-4C16DAY-EP	1.5 x 4 (1.1 x 4)	35.84 (910)	□6.57 (□167)	6.16 (156)	3.82 (97)	407 (185)	38.58 (980)	□6.57 (□167)	6.16 (156)	6.56 (167)	5.04 (128)	4.61 (117)	419 (190)
LHYM2-4C16DAY-EP	2 x 4 (1.5 x 4)	35.84 (910)	□6.57 (□167)	6.16 (156)	3.82 (97)	410 (186)	38.58 (980)	□6.57 (□167)	6.16 (156)	6.56 (167)	5.04 (128)	4.61 (117)	421 (191)
LHYM1-4C16DBY-EP	1 x 4 (0.75 x 4)	35.33 (897)	□6.22 (□158)	5.98 (152)	3.82 (97)	404 (184)	37.83 (961)	□6.22 (□158)	5.98 (152)	6.32 (161)	4.80 (122)	4.25 (108)	414 (188)
LHYM1H-4C16DBY-EP	1.5 x 4 (1.1 x 4)	36.39 (924)	□6.57 (□167)	6.16 (156)	3.82 (97)	412 (187)	39.13 (994)	□6.57 (□167)	6.16 (156)	6.56 (167)	5.04 (128)	4.61 (117)	423 (192)
LHYM2-4C16DBY-EP	2 x 4 (1.5 x 4)	36.39 (924)	□6.57 (□167)	6.16 (156)	3.82 (97)	415 (188)	39.13 (994)	□6.57 (□167)	6.16 (156)	6.56 (167)	5.04 (128)	4.61 (117)	426 (194)
LHYM3-4C16DBY-EP	3 x 4 (2.2 x 4)	37.22 (945)	□7.24 (□184)	6.71 (170)	4.53 (115)	431 (196)	40.29 (1023)	□7.24 (□184)	6.71 (170)	7.60 (193)	5.43 (138)	5.04 (128)	447 (203)
LHYM08-4C16DCY	3/4 x 4 (0.55 x 4)	33.66 (855)	ø5.94 (ø151)	5.67 (144)	3.82 (97)	421 (191)	35.35 (898)	ø5.94 (ø151)	5.67 (144)	5.51 (140)	3.66 (93)	3.94 (100)	427 (194)
LHYM08-4C16DCY-AV	3/4 x 4 (0.55 x 4)	34.96 (888)	ø6.30 (ø160)	5.86 (149)	3.94 (100)	429 (195)	37.40 (950)	ø6.30 (ø160)	5.86 (149)	6.38 (162)	4.53 (115)	4.29 (109)	440 (200)
LHYM02-4D16DAY	1/4 x 4 (0.2 x 4)	34.67 (881)	ø4.88 (ø124)	4.63 (118)	2.32 (59)	522 (237)	35.93 (913)	ø4.88 (ø124)	4.63 (118)	3.58 (91)	2.40 (61)	-	525 (238)
LHYM02-4D16DAY-AV	1/4 x 4 (0.2 x 4)	35.46 (901)	ø4.88 (ø124)	4.63 (118)	2.32 (59)	525 (238)	36.72 (933)	ø4.88 (ø124)	4.63 (118)	3.58 (91)	2.40 (61)	-	528 (240)
LHYM03-4D16DAY	1/3 x 4 (0.25 x 4)	34.67 (881)	ø4.88 (ø124)	4.63 (118)	2.32 (59)	522 (237)	35.93 (913)	ø4.88 (ø124)	4.63 (118)	3.58 (91)	2.40 (61)	-	525 (238)
LHYM03-4D16DAY-AV	1/3 x 4 (0.25 x 4)	35.46 (901)	ø4.88 (ø124)	4.63 (118)	2.32 (59)	525 (238)	36.72 (933)	ø4.88 (ø124)	4.63 (118)	3.58 (91)	2.40 (61)	-	528 (240)
LHYM05-4D16DAY	1/2 x 4 (0.4 x 4)	35.46 (901)	ø4.88 (ø124)	4.63 (118)	2.32 (59)	525 (238)	36.72 (933)	ø4.88 (ø124)	4.63 (118)	3.58 (91)	2.40 (61)	-	528 (240)
LHYM05-4D16DAY-AV	1/2 x 4 (0.4 x 4)	37.07 (942)	ø5.94 (ø151)	5.67 (144)	3.82 (97)	532 (242)	38.77 (985)	ø5.94 (ø151)	5.67 (144)	5.51 (140)	3.66 (93)	3.94 (100)	538 (244)
LHYM08-4D16DAY	3/4 x 4 (0.55 x 4)	37.07 (942)	ø5.94 (ø151)	5.67 (144)	3.82 (97)	530 (241)	38.77 (985)	ø5.94 (ø151)	5.67 (144)	5.51 (140)	3.66 (93)	3.94 (100)	536 (243)
LHYM08-4D16DAY-AV	3/4 x 4 (0.55 x 4)	38.37 (975)	ø6.30 (ø160)	5.86 (149)	3.94 (100)	541 (245)	40.81 (1037)	ø6.30 (ø160)	5.86 (149)	6.38 (162)	4.53 (115)	4.29 (109)	551 (250)
LHYM1-4D16DAY-EP	1 x 4 (0.75 x 4)	38.81 (986)	□6.22 (□158)	5.98 (152)	3.82 (97)	545 (248)	41.31 (1049)	□6.22 (□158)	5.98 (152)	6.32 (161)	4.80 (122)	4.25 (108)	555 (252)
LHYM1H-4D16DAY-EP	1.5 x 4 (1.1 x 4)	39.87 (1013)	□6.57 (□167)	6.16 (156)	3.82 (97)	553 (251)	42.60 (1082)	□6.57 (□167)	6.16 (156)	6.56 (167)	5.04 (128)	4.61 (117)	565 (256)
LHYM2-4D16DAY-EP	2 x 4 (1.5 x 4)	39.87 (1013)	□6.57 (□167)	6.16 (156)	3.82 (97)	556 (252)	42.60 (1082)	□6.57 (□167)	6.16 (156)	6.56 (167)	5.04 (128)	4.61 (117)	567 (258)
LHYM08-4D16DBY	3/4 x 4 (0.55 x 4)	37.62 (956)	ø5.94 (ø151)	5.67 (144)	3.82 (97)	534 (243)	39.32 (999)	ø5.94 (ø151)	5.67 (144)	5.51 (140)	3.66 (93)	3.94 (100)	540 (245)
LHYM08-4D16DBY-AV	3/4 x 4 (0.55 x 4)	38.92 (989)	ø6.30 (ø160)	5.86 (149)	3.94 (100)	545 (248)	41.36 (1051)	ø6.30 (ø160)	5.86 (149)	6.38 (162)	4.53 (115)	4.29 (109)	556 (252)
LHYM1-4D16DBY-EP	1 x 4 (0.75 x 4)	39.36 (1000)	□6.22 (□158)	5.98 (152)	3.82 (97)	550 (250)	41.86 (1063)	□6.22 (□158)	5.98 (152)	6.32 (161)	4.80 (122)	4.25 (108)	560 (254)
LHYM1H-4D16DBY-EP	1.5 x 4 (1.1 x 4)	40.42 (1027)	□6.57 (□167)	6.16 (156)	3.82 (97)	558 (253)	43.16 (1096)	□6.57 (□167)	6.16 (156)	6.56 (167)	5.04 (128)	4.61 (117)	569 (258)
LHYM2-4D16DBY-EP	2 x 4 (1.5 x 4)	40.42 (1027)	□6.57 (□167)	6.16 (156)	3.82 (97)	560 (255)	43.16 (1096)	□6.57 (□167)	6.16 (156)	6.56 (167)	5.04 (128)	4.61 (117)	572 (260)
LHYM3-4D16DBY-EP	3 x 4 (2.2 x 4)	41.25 (1048)	□7.24 (□184)	6.71 (170)	4.53 (115)	577 (262)	44.32 (1126)	□7.24 (□184)	6.71 (170)	7.60 (193)	5.43 (138)	5.04 (128)	593 (269)

Notes [1]: DM Dimension Symbol ø = Round Fan Cover
DM Dimension Symbol □= Square Fan Cover

LXXX-4XX0/4XX5 Frame sizes have equal dimensions, different ratings.

Dimensions show are for reference only and are subject to change without notice, unless certified.
Certified prints are available after receipt of an order; consult factory.

Dimensions

Double Reduction Cyclo®
LHYM-4D16DBY~4D17DCY

Minimum Engagement		
Frame Size	TT	
	inch	*(mm)*
4D	12.83	*(326)*

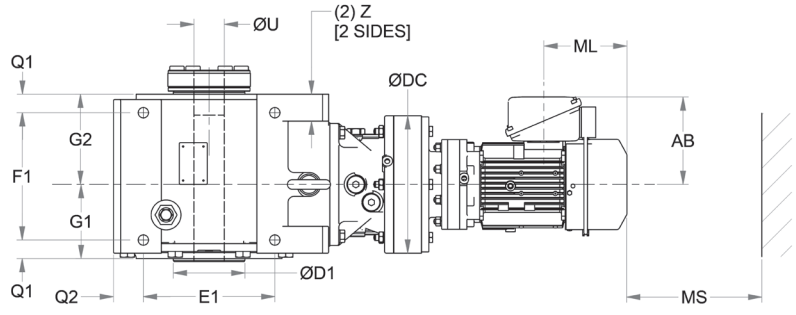

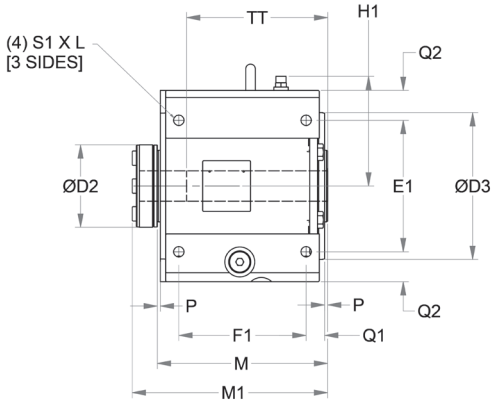

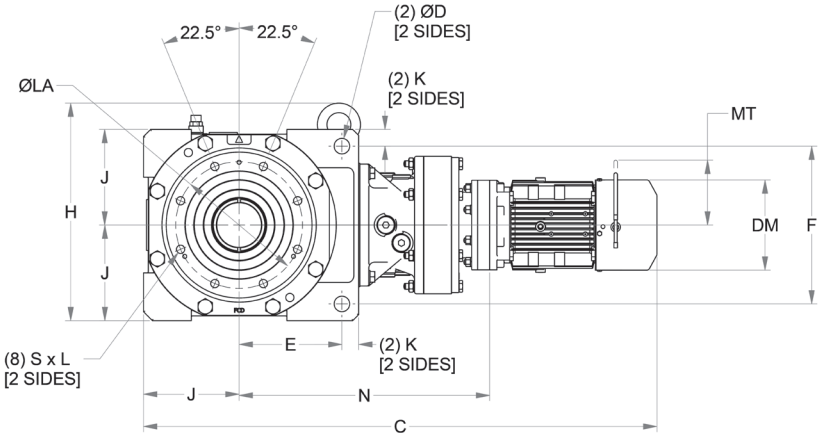

All dimensions are in inches *(mm)*.
For double reduction units ordered in the Y2 mounting configuration, please refer to page 2.133 for external lubricant piping dimensions.

Model	N	ØDC	J	E	F	K	Z	ØD	E1	F1	Q1	Q2	S1 x L	M
4D16DB	18.0 *(456)*	11.8 *(300)*	7.48 *(190)*	7.60 *(193)*	12.2 *(310)*	1.38 *(35)*	2.17 *(55)*	1.30 *(33)*	9.84 *(250)*	10.0 *(254)*	1.42 *(36)*	2.56 *(65)*	M24 x 1.57 *(M24 x 40)*	13.4 *(340)*
4D16DC	18.0 *(458)*	11.8 *(300)*												
4D17DA	20.2 *(514)*	11.8 *(300)*												
4D17DB	20.8 *(528)*	11.8 *(300)*												
4D17DC	20.8 *(527)*	13.4 *(340)*												

												ØU	
Model	P	G1	G2	H	H1	ØLA	ØD3	S x L	M1	ØD1	ØD2	Std & Max	Min
4D16DB, 4D16DC, 4D17DA, 4D17DB, 4D17DC	0.28 *(7)*	5.83 *(148)*	7.01 *(178)*	16.7 *(424)*	8.39 *(213)*	10.0 *(255)*	11.6 *(295)*	M20 x 1.30 *(M20 x 33)*	15.0 *(381)*	5.51 *(140)*	5.98 *(152)*	3-7/16 *(87.31)*	2-7/16 *(61.91)*

LHYM1-4D16DBY-EP ► LHYM5-4D17DCY-EP

All dimensions are in inches *(mm)*

Model	4 Pole Motor HP *(kW)*	Without Brake					With Brake						
		C	DM [1]	AB	ML	Weight lb *(kg)*	C	DM [1]	AB	ML	MS	MT	Weight lb *(kg)*
LHYM2-4D16DCY-EP	2 x 4 (1.5 x 4)	40.48 (1028)	□6.57 (□167)	6.16 (156)	3.82 (97)	575 (261)	43.21 (1098)	□6.57 (□167)	6.16 (156)	6.56 (167)	5.04 (128)	4.61 (117)	586 (266)
LHYM5-4D16DCY-EP	5 x 4 (3.7 x 4)	41.34 (1050)	□8.74 (□222)	7.34 (186)	4.65 (118)	613 (278)	44.91 (1141)	□8.74 (□222)	7.34 (186)	8.21 (209)	6.02 (153)	6.30 (160)	637 (289)
LHYM02-4D17DAY	1/4 x 4 (0.2 x 4)	34.46 (875)	ø4.88 (ø124)	4.63 (118)	2.32 (59)	553 (251)	35.72 (907)	ø4.88 (ø124)	4.63 (118)	3.58 (91)	2.40 (61)	-	556 (252)
LHYM02-4D17DAY-AV	1/4 x 4 (0.2 x 4)	35.25 (895)	ø4.88 (ø124)	4.63 (118)	2.32 (59)	556 (252)	36.51 (927)	ø4.88 (ø124)	4.63 (118)	3.58 (91)	2.40 (61)	-	559 (254)
LHYM03-4D17DAY	1/3 x 4 (0.25 x 4)	34.46 (875)	ø4.88 (ø124)	4.63 (118)	2.32 (59)	553 (251)	35.72 (907)	ø4.88 (ø124)	4.63 (118)	3.58 (91)	2.40 (61)	-	556 (252)
LHYM03-4D17DAY-AV	1/3 x 4 (0.25 x 4)	35.25 (895)	ø4.88 (ø124)	4.63 (118)	2.32 (59)	556 (252)	36.51 (927)	ø4.88 (ø124)	4.63 (118)	3.58 (91)	2.40 (61)	-	559 (254)
LHYM05-4D17DAY	1/2 x 4 (0.4 x 4)	35.25 (895)	ø4.88 (ø124)	4.63 (118)	2.32 (59)	556 (252)	36.51 (927)	ø4.88 (ø124)	4.63 (118)	3.58 (91)	2.40 (61)	-	559 (254)
LHYM05-4D17DAY-AV	1/2 x 4 (0.4 x 4)	36.86 (936)	ø5.94 (ø151)	5.67 (144)	3.82 (97)	563 (256)	38.56 (979)	ø5.94 (ø151)	5.67 (144)	5.51 (140)	3.66 (93)	3.94 (100)	569 (258)
LHYM08-4D17DAY	3/4 x 4 (0.55 x 4)	36.86 (936)	ø5.94 (ø151)	5.67 (144)	3.82 (97)	561 (255)	38.56 (979)	ø5.94 (ø151)	5.67 (144)	5.51 (140)	3.66 (93)	3.94 (100)	566 (257)
LHYM08-4D17DAY-AV	3/4 x 4 (0.55 x 4)	38.16 (969)	ø6.30 (ø160)	5.86 (149)	3.94 (100)	571 (259)	40.60 (1031)	ø6.30 (ø160)	5.86 (149)	6.38 (162)	4.53 (115)	4.29 (109)	582 (264)
LHYM1-4D17DAY-EP	1 x 4 (0.75 x 4)	38.60 (980)	□6.22 (□158)	5.98 (152)	3.82 (97)	576 (262)	41.10 (1044)	□6.22 (□158)	5.98 (152)	6.32 (161)	4.80 (122)	4.25 (108)	586 (266)
LHYM1H-4D17DAY-EP	1.5 x 4 (1.1 x 4)	39.66 (1007)	□6.57 (□167)	6.16 (156)	3.82 (97)	584 (265)	42.40 (1077)	□6.57 (□167)	6.16 (156)	6.56 (167)	5.04 (128)	4.61 (117)	595 (270)
LHYM2-4D17DAY-EP	2 x 4 (1.5 x 4)	39.66 (1007)	□6.57 (□167)	6.16 (156)	3.82 (97)	587 (266)	42.40 (1077)	□6.57 (□167)	6.16 (156)	6.56 (167)	5.04 (128)	4.61 (117)	598 (272)
LHYM1-4D17DBY-EP	1 x 4 (0.75 x 4)	39.15 (994)	□6.22 (□158)	5.98 (152)	3.82 (97)	581 (264)	41.65 (1058)	□6.22 (□158)	5.98 (152)	6.32 (161)	4.80 (122)	4.25 (108)	591 (268)
LHYM1H-4D17DBY-EP	1.5 x 4 (1.1 x 4)	40.21 (1021)	□6.57 (□167)	6.16 (156)	3.82 (97)	588 (267)	42.95 (1091)	□6.57 (□167)	6.16 (156)	6.56 (167)	5.04 (128)	4.61 (117)	600 (272)
LHYM2-4D17DBY-EP	2 x 4 (1.5 x 4)	40.21 (1021)	□6.57 (□167)	6.16 (156)	3.82 (97)	591 (269)	42.95 (1091)	□6.57 (□167)	6.16 (156)	6.56 (167)	5.04 (128)	4.61 (117)	603 (274)
LHYM3-4D17DBY-EP	3 x 4 (2.2 x 4)	41.04 (1042)	□7.24 (□184)	6.71 (170)	4.53 (115)	607 (276)	44.11 (1120)	□7.24 (□184)	6.71 (170)	7.60 (193)	5.43 (138)	5.04 (128)	624 (283)
LHYM08-4D17DCY	3/4 x 4 (0.55 x 4)	37.55 (954)	ø5.94 (ø151)	5.67 (144)	3.82 (97)	578 (262)	39.25 (997)	ø5.94 (ø151)	5.67 (144)	5.51 (140)	3.66 (93)	3.94 (100)	584 (265)
LHYM08-4D17DCY-AV	3/4 x 4 (0.55 x 4)	38.85 (987)	ø6.30 (ø160)	5.86 (149)	3.94 (100)	586 (266)	41.29 (1049)	ø6.30 (ø160)	5.86 (149)	6.38 (162)	4.53 (115)	4.29 (109)	597 (271)
LHYM2-4D17DCY-EP	2 x 4 (1.5 x 4)	40.35 (1025)	□6.57 (□167)	6.16 (156)	3.82 (97)	601 (273)	43.08 (1094)	□6.57 (□167)	6.16 (156)	6.56 (167)	5.04 (128)	4.61 (117)	613 (278)
LHYM3-4D17DCY-EP	3 x 4 (2.2 x 4)	39.76 (1010)	□7.24 (□184)	6.71 (170)	4.53 (115)	614 (279)	42.83 (1088)	□7.24 (□184)	6.71 (170)	7.60 (193)	5.43 (138)	5.04 (128)	631 (286)
LHYM5-4D17DCY-EP	5 x 4 (3.7 x 4)	41.21 (1047)	□8.74 (□222)	7.34 (186)	4.65 (118)	640 (290)	44.78 (1137)	□8.74 (□222)	7.34 (186)	8.21 (209)	6.02 (153)	6.30 (160)	664 (301)
LHYM02-4E17DAY	1/4 x 4 (0.2 x 4)	36.43 (925)	ø4.88 (ø124)	4.63 (118)	2.32 (59)	720 (327)	37.69 (957)	ø4.88 (ø124)	4.63 (118)	3.58 (91)	2.40 (61)	-	723 (328)
LHYM02-4E17DAY-AV	1/4 x 4 (0.2 x 4)	37.22 (945)	ø4.88 (ø124)	4.63 (118)	2.32 (59)	723 (328)	38.48 (977)	ø4.88 (ø124)	4.63 (118)	3.58 (91)	2.40 (61)	-	726 (330)
LHYM03-4E17DAY	1/3 x 4 (0.25 x 4)	36.43 (925)	ø4.88 (ø124)	4.63 (118)	2.32 (59)	720 (327)	37.69 (957)	ø4.88 (ø124)	4.63 (118)	3.58 (91)	2.40 (61)	-	723 (328)
LHYM03-4E17DAY-AV	1/3 x 4 (0.25 x 4)	37.22 (945)	ø4.88 (ø124)	4.63 (118)	2.32 (59)	723 (328)	38.48 (977)	ø4.88 (ø124)	4.63 (118)	3.58 (91)	2.40 (61)	-	726 (330)
LHYM05-4E17DAY	1/2 x 4 (0.4 x 4)	37.22 (945)	ø4.88 (ø124)	4.63 (118)	2.32 (59)	723 (328)	38.48 (977)	ø4.88 (ø124)	4.63 (118)	3.58 (91)	2.40 (61)	-	726 (330)

Notes [1]: DM Dimension Symbol ø = Round Fan Cover
DM Dimension Symbol □= Square Fan Cover

LXXX-4XX0/4XX5 Frame sizes have equal dimensions, different ratings.

Dimensions show are for reference only and are subject to change without notice, unless certified.
Certified prints are available after receipt of an order; consult factory.

Dimensions

Double Reduction Cyclo®
LHYM-4E17DAY~4E18DAY

Minimum Engagement		
Frame Size	TT	
	inch	*(mm)*
4E	14.1	*(359)*

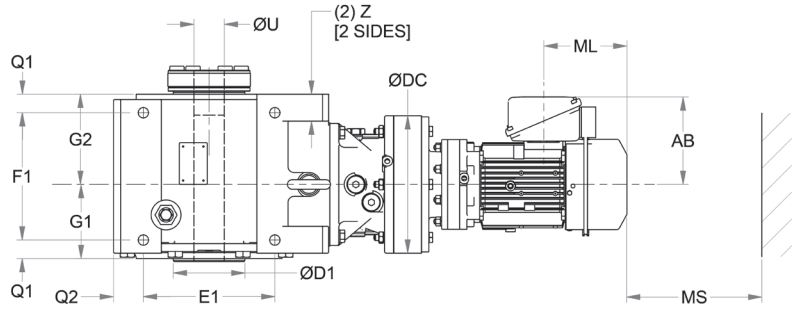

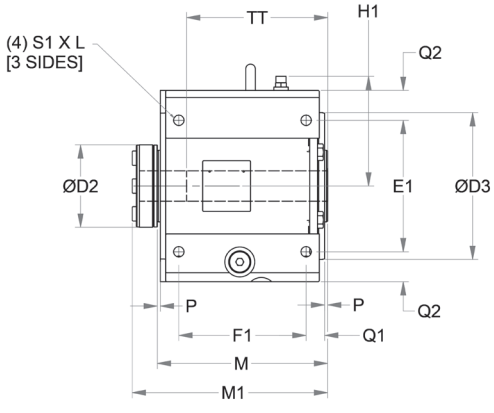

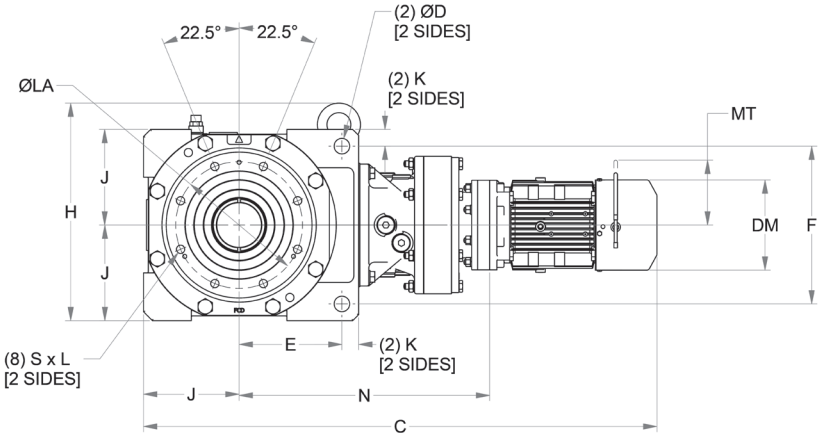

All dimensions are in inches *(mm)*.
For double reduction units ordered in the Y2 mounting configuration, please refer to page 2.133 for external lubricant piping dimensions.

Model	N	ØDC	J	E	F	K	Z	ØD	E1	F1	Q1	Q2	S1 x L	M
4E17DA	21.0 *(534)*	13.4 *(340)*	8.46 *(215)*	9.06 *(230)*	14.2 *(360)*	1.38 *(35)*	2.17 *(55)*	1.30 *(33)*	11.8 *(300)*	11.1 *(283)*	1.50 *(38)*	2.56 *(65)*	M24 x 1.57 *(M24 x 40)*	14.7 *(373)*
4E17DB	21.6 *(548)*	13.4 *(340)*												
4E17DC	21.7 *(552)*	13.4 *(340)*												
4E18DA	24.5 *(621)*	14.6 *(370)*												

												ØU	
Model	**P**	**G1**	**G2**	**H**	**H1**	**ØLA**	**ØD3**	**S x L**	**M1**	**ØD1**	**ØD2**	**Std & Max**	**Min**
4E17DA, 4E17DB 4E17DC,4E18DA,	0.28 *(7)*	6.14 *(156)*	7.99 *(203)*	19.6 *(498)*	9.37 *(238)*	11.02 *(280)*	12.6 *(320)*	M20 x 1.38 *(M20 x 35)*	16.3 *(414)*	6.30 *(160)*	6.69 *(170)*	3-15/16 *(100.01)*	2-15/16 *(74.61)*

LHYM02-4E17DAY ► LHYM1-4E18DAY-EP

All dimensions are in inches *(mm)*

Model	4 Pole Motor HP *(kW)*	Without Brake					With Brake						
		C	DM [1]	AB	ML	Weight lb *(kg)*	C	DM [1]	AB	ML	MS	MT	Weight lb *(kg)*
LHYM05-4E17DAY-AV	1/2 x 4 (0.4 x 4)	38.83 (986)	ø5.94 (ø151)	5.67 (144)	3.82 (97)	730 (332)	40.53 (1029)	ø5.94 (ø151)	5.67 (144)	5.51 (140)	3.66 (93)	3.94 (100)	736 (334)
LHYM08-4E17DAY	3/4 x 4 (0.55 x 4)	38.83 (986)	ø5.94 (ø151)	5.67 (144)	3.82 (97)	728 (330)	40.53 (1029)	ø5.94 (ø151)	5.67 (144)	5.51 (140)	3.66 (93)	3.94 (100)	734 (333)
LHYM08-4E17DAY-AV	3/4 x 4 (0.55 x 4)	40.13 (1019)	ø6.30 (ø160)	5.86 (149)	3.94 (100)	739 (335)	42.57 (1081)	ø6.30 (ø160)	5.86 (149)	6.38 (162)	4.53 (115)	4.29 (109)	750 (340)
LHYM1-4E17DAY-EP	1 x 4 (0.75 x 4)	40.56 (1030)	□6.22 (□158)	5.98 (152)	3.82 (97)	744 (338)	43.06 (1094)	□6.22 (□158)	5.98 (152)	6.32 (161)	4.80 (122)	4.25 (108)	754 (342)
LHYM1H-4E17DAY-EP	1.5 x 4 (1.1 x 4)	41.63 (1057)	□6.57 (□167)	6.16 (156)	3.82 (97)	751 (341)	44.36 (1127)	□6.57 (□167)	6.16 (156)	6.56 (167)	5.04 (128)	4.61 (117)	763 (346)
LHYM2-4E17DAY-EP	2 x 4 (1.5 x 4)	41.63 (1057)	□6.57 (□167)	6.16 (156)	3.82 (97)	754 (342)	44.36 (1127)	□6.57 (□167)	6.16 (156)	6.56 (167)	5.04 (128)	4.61 (117)	766 (348)
LHYM1-4E17DBY-EP	1 x 4 (0.75 x 4)	41.12 (1044)	□6.22 (□158)	5.98 (152)	3.82 (97)	748 (340)	43.62 (1108)	□6.22 (□158)	5.98 (152)	6.32 (161)	4.80 (122)	4.25 (108)	758 (344)
LHYM1H-4E17DBY-EP	1.5 x 4 (1.1 x 4)	42.18 (1071)	□6.57 (□167)	6.16 (156)	3.82 (97)	756 (343)	44.92 (1141)	□6.57 (□167)	6.16 (156)	6.56 (167)	5.04 (128)	4.61 (117)	767 (348)
LHYM2-4E17DBY-EP	2 x 4 (1.5 x 4)	42.18 (1071)	□6.57 (□167)	6.16 (156)	3.82 (97)	759 (344)	44.92 (1141)	□6.57 (□167)	6.16 (156)	6.56 (167)	5.04 (128)	4.61 (117)	770 (350)
LHYM3-4E17DBY-EP	3 x 4 (2.2 x 4)	43.01 (1092)	□7.24 (□184)	6.71 (170)	4.53 (115)	775 (352)	46.08 (1170)	□7.24 (□184)	6.71 (170)	7.60 (193)	5.43 (138)	5.04 (128)	792 (359)
LHYM2-4E17DCY-EP	2 x 4 (1.5 x 4)	42.32 (1075)	□6.57 (□167)	6.16 (156)	3.82 (97)	768 (349)	45.05 (1144)	□6.57 (□167)	6.16 (156)	6.56 (167)	5.04 (128)	4.61 (117)	780 (354)
LHYM3-4E17DCY-EP	3 x 4 (2.2 x 4)	41.73 (1060)	□7.24 (□184)	6.71 (170)	4.53 (115)	781 (355)	44.80 (1138)	□7.24 (□184)	6.71 (170)	7.60 (193)	5.43 (138)	5.04 (128)	798 (362)
LHYM5-4E17DCY-EP	5 x 4 (3.7 x 4)	43.18 (1097)	□8.74 (□222)	7.34 (186)	4.65 (118)	807 (366)	46.75 (1187)	□8.74 (□222)	7.34 (186)	8.21 (209)	6.02 (153)	6.30 (160)	831 (377)
LHYM8-4E17DCY-EP	7.5 x 4 (5.5 x 4)	44.88 (1140)	□8.74 (□222)	7.34 (186)	4.65 (118)	841 (382)	48.44 (1230)	□8.74 (□222)	7.34 (186)	8.21 (209)	6.02 (153)	6.30 (160)	865 (392)
LHYM03-4E18DAY	1/3 x 4 (0.25 x 4)	37.26 (947)	ø4.88 (ø124)	4.63 (118)	2.32 (59)	818 (371)	38.52 (979)	ø4.88 (ø124)	4.63 (118)	3.58 (91)	2.40 (61)	-	821 (372)
LHYM03-4E18DAY-AV	1/3 x 4 (0.25 x 4)	38.05 (967)	ø4.88 (ø124)	4.63 (118)	2.32 (59)	821 (372)	39.31 (999)	ø4.88 (ø124)	4.63 (118)	3.58 (91)	2.40 (61)	-	824 (374)
LHYM05-4E18DAY	1/2 x 4 (0.4 x 4)	38.05 (967)	ø4.88 (ø124)	4.63 (118)	2.32 (59)	821 (372)	39.31 (999)	ø4.88 (ø124)	4.63 (118)	3.58 (91)	2.40 (61)	-	824 (374)
LHYM05-4E18DAY-AV	1/2 x 4 (0.4 x 4)	39.67 (1008)	ø5.94 (ø151)	5.67 (144)	3.82 (97)	828 (376)	41.36 (1051)	ø5.94 (ø151)	5.67 (144)	5.51 (140)	3.66 (93)	3.94 (100)	834 (378)
LHYM08-4E18DAY	3/4 x 4 (0.55 x 4)	39.67 (1008)	ø5.94 (ø151)	5.67 (144)	3.82 (97)	825 (375)	41.36 (1051)	ø5.94 (ø151)	5.67 (144)	5.51 (140)	3.66 (93)	3.94 (100)	831 (377)
LHYM08-4E18DAY-AV	3/4 x 4 (0.55 x 4)	40.96 (1041)	ø6.30 (ø160)	5.86 (149)	3.94 (100)	836 (380)	43.41 (1103)	ø6.30 (ø160)	5.86 (149)	6.38 (162)	4.53 (115)	4.29 (109)	847 (384)
LHYM1-4E18DAY-EP	1 x 4 (0.75 x 4)	41.40 (1052)	□6.22 (□158)	5.98 (152)	3.82 (97)	841 (382)	43.90 (1115)	□6.22 (□158)	5.98 (152)	6.32 (161)	4.80 (122)	4.25 (108)	851 (386)
LHYM1H-4E18DAY-EP	1.5 x 4 (1.1 x 4)	42.46 (1079)	□6.57 (□167)	6.16 (156)	3.82 (97)	848 (385)	45.20 (1148)	□6.57 (□167)	6.16 (156)	6.56 (167)	5.04 (128)	4.61 (117)	860 (390)
LHYM2-4E18DAY-EP	2 x 4 (1.5 x 4)	42.46 (1079)	□6.57 (□167)	6.16 (156)	3.82 (97)	851 (386)	45.20 (1148)	□6.57 (□167)	6.16 (156)	6.56 (167)	5.04 (128)	4.61 (117)	863 (392)
LHYM3-4E18DAY-EP	3 x 4 (2.2 x 4)	43.29 (1100)	□7.24 (□184)	6.71 (170)	4.53 (115)	867 (394)	46.36 (1178)	□7.24 (□184)	6.71 (170)	7.60 (193)	5.43 (138)	5.04 (128)	884 (401)
LHYM1H-4E18DBY-EP	1.5 x 4 (1.1 x 4)	43.35 (1101)	□6.57 (□167)	6.16 (156)	3.82 (97)	873 (396)	46.08 (1171)	□6.57 (□167)	6.16 (156)	6.56 (167)	5.04 (128)	4.61 (117)	884 (401)
LHYM2-4E18DBY-EP	2 x 4 (1.5 x 4)	43.35 (1101)	□6.57 (□167)	6.16 (156)	3.82 (97)	876 (397)	46.08 (1171)	□6.57 (□167)	6.16 (156)	6.56 (167)	5.04 (128)	4.61 (117)	887 (403)
LHYM3-4E18DBY-EP	3 x 4 (2.2 x 4)	42.76 (1086)	□7.24 (□184)	6.71 (170)	4.53 (115)	887 (403)	45.83 (1164)	□7.24 (□184)	6.71 (170)	7.60 (193)	5.43 (138)	5.04 (128)	904 (410)

Notes [1]: DM Dimension Symbol ø = Round Fan Cover
DM Dimension Symbol □= Square Fan Cover

LXXX-4XX0/4XX5 Frame sizes have equal dimensions, different ratings.

Dimensions show are for reference only and are subject to change without notice, unless certified.
Certified prints are available after receipt of an order; consult factory.

Dimensions

Double Reduction Cyclo®
LHYM-4E18DAY ~ 4F19DAY

Minimum Engagement		
Frame Size	TT	
	inch	*(mm)*
4E	14.1	*(359)*
4F	16.2	*(412)*

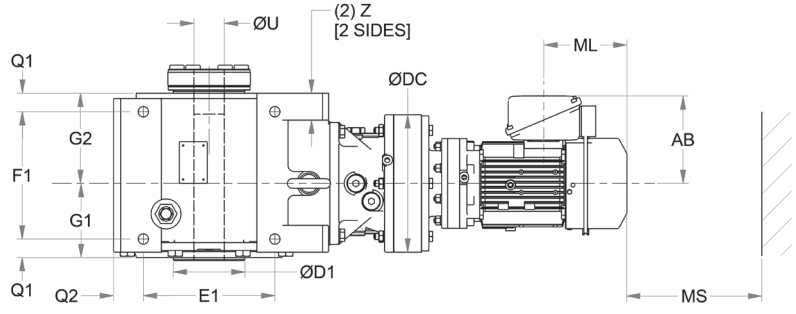

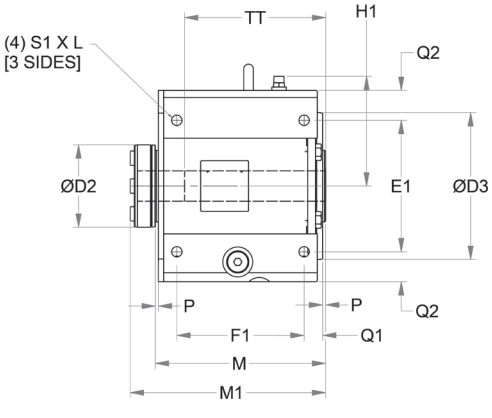

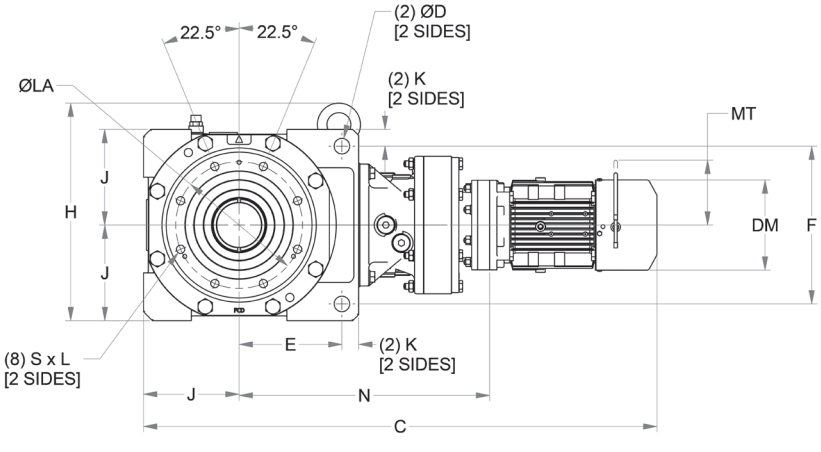

All dimensions are in inches *(mm)*.

Model	N	ØDC	J	E	F	K	Z	ØD	E1	F1	Q1	Q2	S1 x L	M
4E18DA	24.5 *(621)*	14.6 *(370)*	8.46 *(215)*	9.06 *(230)*	14.2 *(360)*	1.38 *(35)*	2.17 *(55)*	1.30 *(33)*	11.8 *(300)*	11.1 *(283)*	1.50 *(38)*	2.56 *(65)*	M24 x 1.57 *(M24 x 40)*	14.7 *(373)*
4E18DB	25.3 *(643)*	14.6 *(370)*												
4F18DA	26.9 *(684)*	14.6 *(370)*	9.45 *(240)*	9.92 *(252)*	15.8 *(400)*	1.6 *(40)*	2.2 *(55)*	1.5 *(39)*	13.4 *(340)*	12.6 *(320)*	1.99 *(50.5)*	2.8 *(70)*	M30 x 1.97 *(M30 x 50)*	17.1 *(435)*
4F18DB	27.8 *(706)*	14.6 *(370)*												
4F19DA	28.3 *(718)*	16.9 *(430)*												

												ØU	
Model	**P**	**G1**	**G2**	**H**	**H1**	**ØLA**	**ØD3**	**S x L**	**M1**	**ØD1**	**ØD2**	**Std & Max**	**Min**
4E18DA, 4E18DB	0.28 *(7)*	6.14 *(156)*	7.99 *(203)*	19.6 *(498)*	9.37 *(238)*	11.02 *(280)*	12.6 *(320)*	M20 x 1.38 *(M20 x 35)*	16.3 *(414)*	6.30 *(160)*	6.69 *(170)*	3-15/16 *(100.01)*	2-15/16 *(74.61)*
4F18DA, 4F18DB 4F19DA	0.3 *(7)*	7.20 *(183)*	9.37 *(238)*	23.2 *(590)*	10.8 *(273)*	12.6 *(320)*	14.6 *(370)*	M24 x 1.97 *(M24 x 50)*	19.1 *(486)*	7.09 *(180)*	8.15 *(207)*	4-15/16 *(125.41)*	3-15/16 *(100.01)*

LHYM1H-4E18DAY-EP ► LHYM05-4F19DAY

All dimensions are in inches *(mm)*

Model	4 Pole Motor HP *(kW)*	Without Brake					With Brake						
		C	DM [1]	AB	ML	Weight lb *(kg)*	C	DM [1]	AB	ML	MS	MT	Weight lb *(kg)*
LHYM5-4E18DBY-EP	5 x 4 (3.7 x 4)	44.02 (1118)	□8.74 (□222)	7.34 (186)	4.65 (118)	911 (414)	47.58 (1209)	□8.74 (□222)	7.34 (186)	8.21 (209)	6.02 (153)	6.30 (160)	935 (424)
LHYM8-4E18DBY-EP	7.5 x 4 (5.5 x 4)	45.71 (1161)	□8.74 (□222)	7.34 (186)	4.65 (118)	945 (429)	49.27 (1252)	□8.74 (□222)	7.34 (186)	8.21 (209)	6.02 (153)	6.30 (160)	969 (440)
LHYM03-4F18DAY	1/3 x 4 (0.25 x 4)	40.74 (1035)	ø4.88 (ø124)	4.63 (118)	2.32 (59)	1205 (547)	42.00 (1067)	ø4.88 (ø124)	4.63 (118)	3.58 (91)	2.40 (61)	-	1208 (548)
LHYM03-4F18DAY-AV	1/3 x 4 (0.25 x 4)	41.53 (1055)	ø4.88 (ø124)	4.63 (118)	2.32 (59)	1208 (548)	42.79 (1087)	ø4.88 (ø124)	4.63 (118)	3.58 (91)	2.40 (61)	-	1211 (550)
LHYM05-4F18DAY	1/2 x 4 (0.4 x 4)	41.53 (1055)	ø4.88 (ø124)	4.63 (118)	2.32 (59)	1208 (548)	42.79 (1087)	ø4.88 (ø124)	4.63 (118)	3.58 (91)	2.40 (61)	-	1211 (550)
LHYM05-4F18DAY-AV	1/2 x 4 (0.4 x 4)	43.14 (1096)	ø5.94 (ø151)	5.67 (144)	3.82 (97)	1215 (552)	44.84 (1139)	ø5.94 (ø151)	5.67 (144)	5.51 (140)	3.66 (93)	3.94 (100)	1221 (554)
LHYM08-4F18DAY	3/4 x 4 (0.55 x 4)	43.14 (1096)	ø5.94 (ø151)	5.67 (144)	3.82 (97)	1213 (550)	44.84 (1139)	ø5.94 (ø151)	5.67 (144)	5.51 (140)	3.66 (93)	3.94 (100)	1219 (553)
LHYM08-4F18DAY-AV	3/4 x 4 (0.55 x 4)	44.44 (1129)	ø6.30 (ø160)	5.86 (149)	3.94 (100)	1224 (555)	46.88 (1191)	ø6.30 (ø160)	5.86 (149)	6.38 (162)	4.53 (115)	4.29 (109)	1234 (560)
LHYM1-4F18DAY-EP	1 x 4 (0.75 x 4)	44.88 (1140)	□6.22 (□158)	5.98 (152)	3.82 (97)	1229 (558)	47.38 (1203)	□6.22 (□158)	5.98 (152)	6.32 (161)	4.80 (122)	4.25 (108)	1238 (562)
LHYM1H-4F18DAY-EP	1.5 x 4 (1.1 x 4)	45.94 (1167)	□6.57 (□167)	6.16 (156)	3.82 (97)	1236 (561)	48.68 (1236)	□6.57 (□167)	6.16 (156)	6.56 (167)	5.04 (128)	4.61 (117)	1248 (566)
LHYM2-4F18DAY-EP	2 x 4 (1.5 x 4)	45.94 (1167)	□6.57 (□167)	6.16 (156)	3.82 (97)	1239 (562)	48.68 (1236)	□6.57 (□167)	6.16 (156)	6.56 (167)	5.04 (128)	4.61 (117)	1250 (567)
LHYM3-4F18DAY-EP	3 x 4 (2.2 x 4)	46.77 (1188)	□7.24 (□184)	6.71 (170)	4.53 (115)	1255 (570)	49.84 (1266)	□7.24 (□184)	6.71 (170)	7.60 (193)	5.43 (138)	5.04 (128)	1272 (577)
LHYM1H-4F18DBY-EP	1.5 x 4 (1.1 x 4)	46.82 (1189)	□6.57 (□167)	6.16 (156)	3.82 (97)	1260 (572)	49.56 (1259)	□6.57 (□167)	6.16 (156)	6.56 (167)	5.04 (128)	4.61 (117)	1272 (577)
LHYM2-4F18DBY-EP	2 x 4 (1.5 x 4)	46.82 (1189)	□6.57 (□167)	6.16 (156)	3.82 (97)	1263 (573)	49.56 (1259)	□6.57 (□167)	6.16 (156)	6.56 (167)	5.04 (128)	4.61 (117)	1275 (579)
LHYM3-4F18DBY-EP	3 x 4 (2.2 x 4)	46.23 (1174)	□7.24 (□184)	6.71 (170)	4.53 (115)	1275 (578)	49.31 (1252)	□7.24 (□184)	6.71 (170)	7.60 (193)	5.43 (138)	5.04 (128)	1291 (586)
LHYM5-4F18DBY-EP	5 x 4 (3.7 x 4)	47.49 (1206)	□8.74 (□222)	7.34 (186)	4.65 (118)	1299 (589)	51.06 (1297)	□8.74 (□222)	7.34 (186)	8.21 (209)	6.02 (153)	6.30 (160)	1323 (600)
LHYM8-4F18DBY-EP	7.5 x 4 (5.5 x 4)	49.19 (1249)	□8.74 (□222)	7.34 (186)	4.65 (118)	1333 (605)	52.75 (1340)	□8.74 (□222)	7.34 (186)	8.21 (209)	6.02 (153)	6.30 (160)	1357 (616)
LHYM10-4F18DBY-EP	10 x 4 (7.5 x 4)	50.68 (1287)	□10.24 (□260)	9.04 (230)	5.43 (138)	1360 (617)	54.82 (1392)	□10.24 (□260)	9.04 (230)	9.57 (243)	7.44 (189)	7.32 (186)	1404 (637)
LHYM03-4F19DAY-AV	1/3 x 4 (0.25 x 4)	42.68 (1084)	ø4.88 (ø124)	4.63 (118)	2.32 (59)	1314 (596)	43.94 (1116)	ø4.88 (ø124)	4.63 (118)	3.58 (91)	2.40 (61)	-	1317 (597)
LHYM05-4F19DAY	1/2 x 4 (0.4 x 4)	42.68 (1084)	ø4.88 (ø124)	4.63 (118)	2.32 (59)	1314 (596)	43.94 (1116)	ø4.88 (ø124)	4.63 (118)	3.58 (91)	2.40 (61)	-	1317 (597)
LHYM05-4F19DAY-AV	1/2 x 4 (0.4 x 4)	44.09 (1120)	ø5.94 (ø151)	5.67 (144)	3.82 (97)	1321 (599)	45.79 (1163)	ø5.94 (ø151)	5.67 (144)	5.51 (140)	3.66 (93)	3.94 (100)	1326 (602)
LHYM08-4F19DAY	3/4 x 4 (0.55 x 4)	44.09 (1120)	ø5.94 (ø151)	5.67 (144)	3.82 (97)	1318 (598)	45.79 (1163)	ø5.94 (ø151)	5.67 (144)	5.51 (140)	3.66 (93)	3.94 (100)	1324 (601)
LHYM08-4F19DAY-AV	3/4 x 4 (0.55 x 4)	45.39 (1153)	ø6.30 (ø160)	5.86 (149)	3.94 (100)	1326 (602)	47.83 (1215)	ø6.30 (ø160)	5.86 (149)	6.38 (162)	4.53 (115)	4.29 (109)	1337 (607)
LHYM1-4F19DAY-EP	1 x 4 (0.75 x 4)	45.83 (1164)	□6.22 (□158)	5.98 (152)	3.82 (97)	1331 (604)	48.33 (1228)	□6.22 (□158)	5.98 (152)	6.32 (161)	4.80 (122)	4.25 (108)	1341 (609)
LHYM1H-4F19DAY-EP	1.5 x 4 (1.1 x 4)	46.89 (1191)	□6.57 (□167)	6.16 (156)	3.82 (97)	1338 (607)	49.63 (1261)	□6.57 (□167)	6.16 (156)	6.56 (167)	5.04 (128)	4.61 (117)	1350 (613)
LHYM2-4F19DAY-EP	2 x 4 (1.5 x 4)	46.89 (1191)	□6.57 (□167)	6.16 (156)	3.82 (97)	1341 (609)	49.63 (1261)	□6.57 (□167)	6.16 (156)	6.56 (167)	5.04 (128)	4.61 (117)	1353 (614)
LHYM3-4F19DAY-EP	3 x 4 (2.2 x 4)	46.30 (1176)	□7.24 (□184)	6.71 (170)	4.53 (115)	1354 (615)	49.37 (1254)	□7.24 (□184)	6.71 (170)	7.60 (193)	5.43 (138)	5.04 (128)	1371 (622)

Notes [1]: DM Dimension Symbol ø = Round Fan Cover
DM Dimension Symbol □= Square Fan Cover

LXXX-4XX0/4XX5 Frame sizes have equal dimensions, different ratings.

Dimensions show are for reference only and are subject to change without notice, unless certified.
Certified prints are available after receipt of an order; consult factory.

Dimensions

Double Reduction Cyclo®
LHYM-4F19DAY ~ 4F19DBY

Minimum Engagement		
Frame Size	TT	
	inch	*(mm)*
4F	16.2	*(412)*

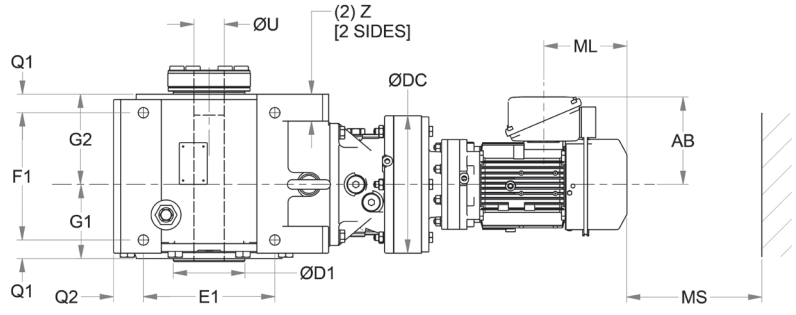

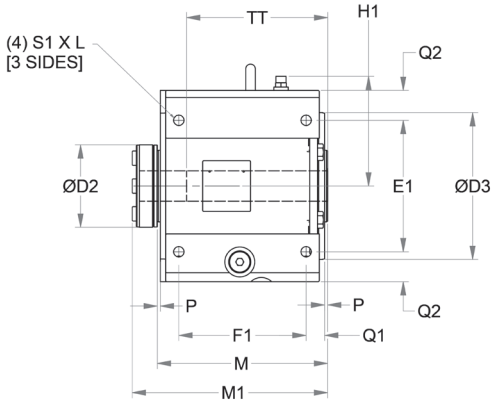

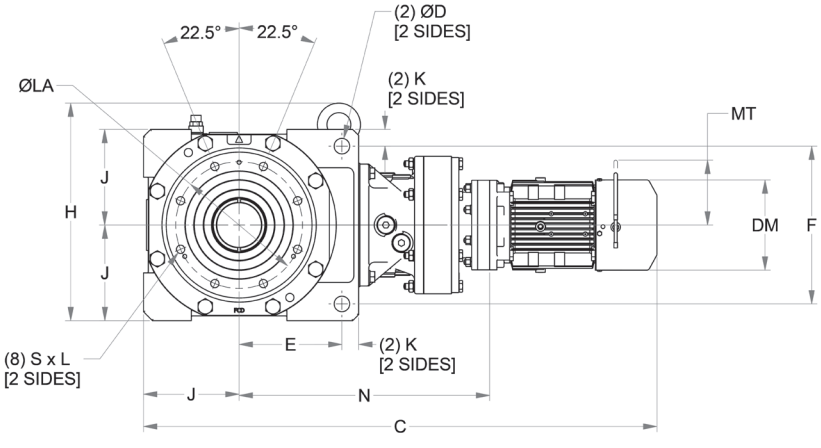

All dimensions are in inches *(mm)*.

Model	N	ØDC	J	E	F	K	Z	ØD	E1	F1	Q1	Q2	S1 x L	M
4F19DA	28.3 *(718)*	16.9 *(430)*	9.45 *(240)*	9.92 *(252)*	15.8 *(400)*	1.6 *(40)*	2.2 *(55)*	1.5 *(39)*	13.4 *(340)*	12.6 *(320)*	1.99 *(50.5)*	2.8 *(70)*	M30 x 1.97 *(M30 x 50)*	17.1 *(435)*
4F19DB	*28.9 (734)*	*16.9 (430)*												

												ØU	
Model	**P**	**G1**	**G2**	**H**	**H1**	**ØLA**	**ØD3**	**S x L**	**M1**	**ØD1**	**ØD2**	**Std & Max**	**Min**
4F19DA, 4F19DB	0.3 *(7)*	7.20 *(183)*	9.37 *(238)*	23.2 *(590)*	10.8 *(273)*	12.6 *(320)*	14.6 *(370)*	M24 x 1.97 *(M24 x 50)*	19.1 *(486)*	7.09 *(180)*	8.15 *(207)*	4-15/16 *(125.41)*	3-15/16 *(100.01)*

LHYM05-4F19DAY-AV ► LHYM10-4F19DBY-EP

All dimensions are in inches *(mm)*

Model	4 Pole Motor HP *(kW)*	Without Brake					With Brake						
		C	DM [1]	AB	ML	Weight lb *(kg)*	C	DM [1]	AB	ML	MS	MT	Weight lb *(kg)*
LHYM5-4F19DAY-EP	5 x 4 (3.7 x 4)	47.76 (1213)	□8.74 (□222)	7.34 (186)	4.65 (118)	1380 (626)	51.32 (1304)	□8.74 (□222)	7.34 (186)	8.21 (209)	6.02 (153)	6.30 (160)	1404 (637)
LHYM8-4F19DAY-EP	7.5 x 4 (5.5 x 4)	49.45 (1256)	□8.74 (□222)	7.34 (186)	4.65 (118)	1413 (641)	53.01 (1347)	□8.74 (□222)	7.34 (186)	8.21 (209)	6.02 (153)	6.30 (160)	1437 (652)
LHYM3-4F19DBY-EP	3 x 4 (2.2 x 4)	46.93 (1192)	□7.24 (□184)	6.71 (170)	4.53 (115)	1358 (616)	50.00 (1270)	□7.24 (□184)	6.71 (170)	7.60 (193)	5.43 (138)	5.04 (128)	1375 (624)
LHYM5-4F19DBY-EP	5 x 4 (3.7 x 4)	48.19 (1224)	□8.74 (□222)	7.34 (186)	4.65 (118)	1383 (627)	51.75 (1315)	□8.74 (□222)	7.34 (186)	8.21 (209)	6.02 (153)	6.30 (160)	1406 (638)
LHYM8-4F19DBY-EP	7.5 x 4 (5.5 x 4)	49.88 (1267)	□8.74 (□222)	7.34 (186)	4.65 (118)	1417 (643)	53.44 (1358)	□8.74 (□222)	7.34 (186)	8.21 (209)	6.02 (153)	6.30 (160)	1441 (654)
LHYM10-4F19DBY-EP	10 x 4 (7.5 x 4)	51.38 (1305)	□10.24 (□260)	9.04 (230)	5.43 (138)	1444 (655)	55.51 (1410)	□10.24 (□260)	9.04 (230)	9.57 (243)	7.44 (189)	7.32 (186)	1488 (675)

Sold & Serviced By:
ELECTROMATE
Toll Free Phone (877) SERVO98
www.electromate.com
sales@electromate.com

Notes [1]: DM Dimension Symbol ø = Round Fan Cover
DM Dimension Symbol □= Square Fan Cover

LXXX-4XX0/4XX5 Frame sizes have equal dimensions, different ratings.

Dimensions show are for reference only and are subject to change without notice, unless certified.
Certified prints are available after receipt of an order; consult factory.

Dimensions

Double Reduction Cyclo®, Y2 Mounting External Lubricant Piping
LHY(J)-4A10DA ~ 4F19DB

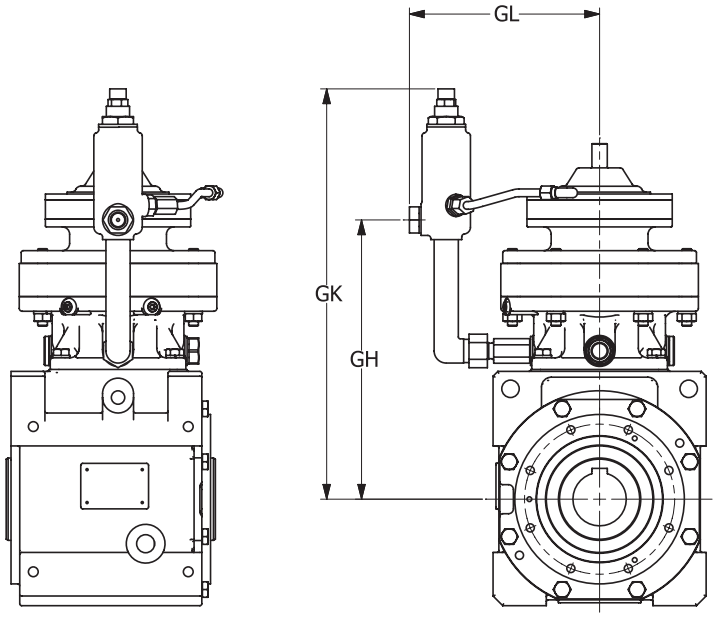

All dimensions are in inches *(mm)*.

Frame Size	GL	GH	GK	Frame Size	GL	GH	GK	Frame Size	GL	GH	GK
4A10DA	5.98 *(152)*	10.9 *(278)*	15.6 *(397)*	**4C14DC**	9.09 *(231)*	16.5 *(418)*	22.6 *(575)*	**4E17DA**	11.4 *(289)*	20.5 *(521)*	28.7 *(728)*
4A12DA	7.99 *(203)*	11.4 *(290)*	16.9 *(428)*	**4C16DA**	10.3 *(261)*	17.0 *(433)*	23.2 *(590)*	**4E17DB**	11.4 *(289)*	20.8 *(528)*	28.9 *(735)*
4A12DB	7.99 *(203)*	11.8 *(299)*	17.2 *(437)*	**4D16DA**	10.3 *(261)*	19.9 *(505)*	26.1 *(662)*	**4E17DC**	11.4 *(289)*	21.0 *(533)*	29.1 *(740)*
4B12DA	7.99 *(203)*	12.9 *(327)*	18.3 *(465)*	**4D16DB**	10.3 *(261)*	20.2 *(512)*	26.3 *(669)*	**4E18DA**	12.4 *(314)*	21.1 *(536)*	31.6 *(803)*
4B12DB	7.99 *(203)*	13.2 *(336)*	18.7 *(474)*	**4D17DA**	11.4 *(289)*	19.5 *(496)*	27.7 *(703)*	**4E18DB**	12.4 *(314)*	20.6 *(522)*	32.2 *(819)*
4B14DA	9.09 *(231)*	13.7 *(349)*	19.9 *(506)*	**4D17DB**	11.4 *(289)*	19.8 *(503)*	28.0 *(710)*	**4F18DA**	12.4 *(314)*	23.6 *(599)*	34.1 *(866)*
4B14DB	9.09 *(231)*	13.9 *(353)*	20.1 *(510)*	**4D17DC**	11.4 *(289)*	20.0 *(508)*	28.1 *(715)*	**4F18DB**	12.4 *(314)*	24.2 *(615)*	34.7 *(882)*
4C14DA	9.09 *(231)*	16.0 *(407)*	22.2 *(564)*	**4D18DA**	12.4 *(314)*	20.1 *(511)*	31.0 *(787)*	**4F19DA**	14.0 *(355)*	24.6 *(624)*	35.1 *(891)*
4C14DB	9.09 *(231)*	16.2 *(411)*	22.4 *(568)*	**4D18DB**	12.4 *(314)*	20.7 *(527)*	31.3 *(794)*	**4F19DB**	14.0 *(355)*	24.9 *(633)*	35.4 *(900)*

Sold & Serviced By:
ELECTROMATE
Toll Free Phone (877) SERV098
www.electromate.com
sales@electromate.com

Dimensions show are for reference only and are subject to change without notice, unless certified.
Certified prints are available after receipt of an order; consult factory.

3
Options

Sold & Serviced By:
ELECTROMATE
Toll Free Phone (877) SERVO98
www.electromate.com
sales@electromate.com

Options

Keyed Hollow Shaft

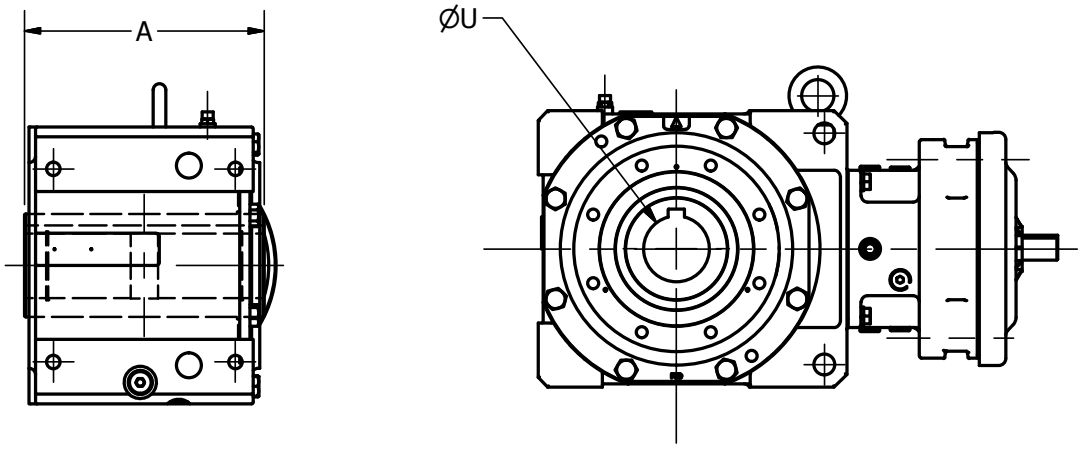

All dimensions are in inches *(mm)*.

Frame Size	Standard Inch Bore Dimension			Standard Metric Bore Dimension			A	TK*
	ØU	ØU Tolerance	Keyway	ØU	ØU Tolerance	Keyway		
4A	2.000	+0.0018/+0.0006	1/2 x 1/4	*(55)*	*(+0.046/+0.016)*	*(16 x 10)*	8.50 *(216)*	6.50 *(165)*
4B	2.375	+0.0018/+0.0006	5/8 x 5/16	*(65)*	*(+0.046/+0.016)*	*(18 x 11)*	10.20 *(259)*	7.87 *(200)*
4C	2.750	+0.0018/+0.0006	5/8 x 5/16	*(75)*	*(+0.046/+0.016)*	*(20 x 12)*	11.22 *(285)*	9.76 *(248)*
4D	3.250	+0.0021/+0.0007	3/4 X 3/8	*(85)*	*(+0.054/+0.019)*	*(22 x 14)*	13.39 *(340)*	11.93 *(303)*
4E	4.000	+0.0021/+0.0007	1 X 1/2	*(100)*	*(+0.054/+0.019)*	*(28 x 16)*	14.69 *(373)*	10.24 *(260)*
4F	4.500	+0.0023/+0.0009	1 X 1/2	*(120)*	*(+0.058/+0.023)*	*(32 x 18)*	17.13 *(435)*	12.44 *(316)*

*Recommended minimum shaft engagement

Key Hollow Bore

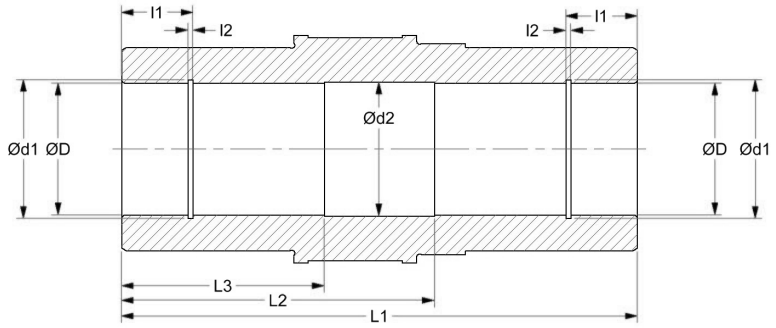

All dimensions are in inches *(mm)*.

Frame Size	BBB			Retaining Ring Groove			Relief	
	ØD	L1	Ød1	l1	l2	Ød2	L2	L3
4A	2 *(55)*	8.50 *(216)*	2.09 *(58)*	1.18 *(30)*	.069 *(2.2)*	2.04 *(56)*	5.16 *(131)*	3.35 *(85)*
4B	2-3/8 *(65)*	10.2 *(259)*	2.51 *(68)*	1.18 *(30)*	0.085 *(2.7)*	2.42 *(66)*	6.26 *(159)*	3.94 *(100)*
4C	2-3/4 *(75)*	11.2 *(285)*	2.93 *(78)*	1.18 *(37)*	0.100 *(2.7)*	2.80 *(76)*	6.50 *(165)*	4.72 *(120)*
4D	3-1/4 *(85)*	13.4 *(340)*	3.43 *(88.5)*	1.46 *(37)*	0.116 *(3.2)*	3.31 *(86)*	7.68 *(208)*	5.71 *(165)*
4E	4 *(100)*	14.7 *(373)*	4.27 *(103.5)*	1.46 *(37)*	0.116 *(3.2)*	4.06 *(101)*	8.19 *(208)*	6.50 *(165)*
4F	4-1/2 *(120)*	17.1 *(435)*	4.74 *(124)*	1.93 *(49)*	0.120 *(4.2)*	4.55 *(121)*	9.49 or 9.69 (3) *(241 or 246 (3))*	7.44 or 7.64 (3) *(189 or 194 (3))*

Dimensions shown are for reference only and are subject to change without notice, unless certified.
Certified prints are available after receipt of an order; consult factory.

Solid Output Shaft

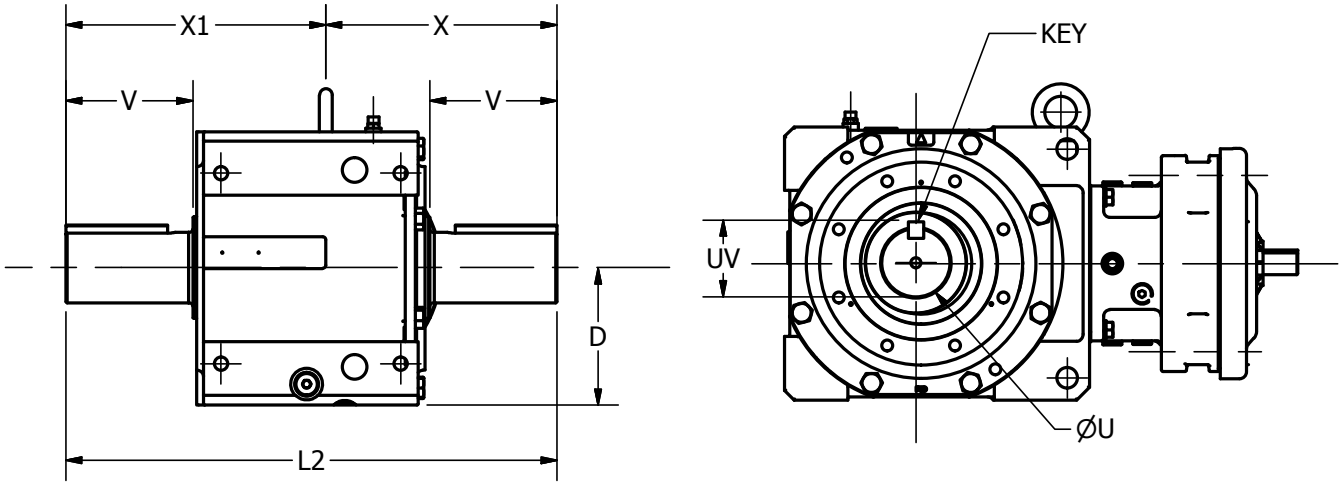

All dimensions are in inches *(mm)*.

Frame Size	Standard Inch Shaft Dimension				Standard Metric Shaft Dimensions				D	V	X	X1	L2
	ØU	ØU Tolerance	UV	Key	ØU	ØU Tolerance	UV	Key					
4A	2.000	h6: 0/-0.0006	2.22	1/2 x 1/2 x 2.76	*(50)*	*(h6: 0/-0.016)*	*(53.5)*	*(14 x 9 x 70)*	4.33 *(110)*	3.54 *(90)*	7.48 *(190)*	8.11 *(206)*	15.59 *(396)*
4B	2.875	h6: 0/-0.0007	3.20	3/4 x 3/4 x 3.15	*(65)*	*(h6: 0/-0.019)*	*(69.0)*	*(18 x 11 x 80)*	5.12 *(130)*	4.53 *(115)*	9.53 *(242)*	9.72 *(247)*	19.25 *(489)*
4C	3.125	h6: 0/-0.0007	3.45	3/4 x 3/4 x 4.72	*(80)*	*(h6: 0/-0.019)*	*(85.0)*	*(22 x 14 x 120)*	6.30 *(160)*	5.71 *(145)*	10.79 *(274)*	11.85 *(301)*	22.64 *(575)*
4D	3.625	h6 0/-0.0009	4.01	7/8 x 7/8 x 5.51	*(95)*	*(h6: 0/-0.022)*	*(100)*	*(25 x 14 x 140)*	7.48 *(190)*	6.69 *(170)*	12.80 *(325)*	13.98 *(355)*	26.77 *(680)*
4E	4.375	h6 0/-0.0009	4.82	1 x 1 x 6.30	*(110)*	*(h6: 0/-0.022)*	*(116)*	*(28 x 16 x 160)*	8.46 *(215)*	7.87 *(200)*	14.29 *(363)*	16.14 *(410)*	30.43 *(773)*
4F	4.750	h6 0/-0.0010	5.29	1-1/4 x 1-1/4 x 6.69	*(130)*	*(h6: 0/-0.025)*	*(137)*	*(32 x 18 x 170)*	9.45 *(240)*	8.27 *(210)*	15.75 *(400)*	17.91 *(455)*	33.66 *(855)*

Sold & Serviced By:
ELECTROMATE
Toll Free Phone (877) SERVO98
www.electromate.com
sales@electromate.com

Options

Output Flange

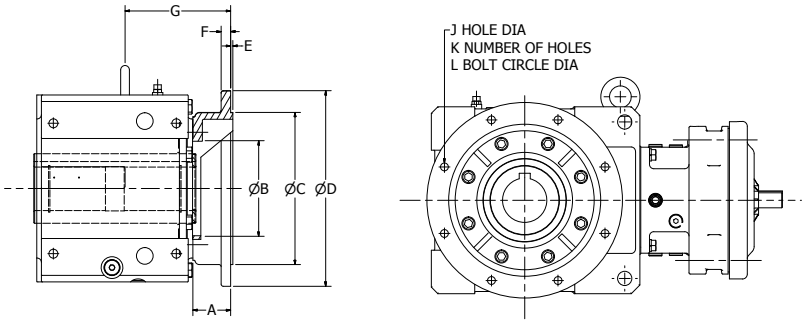

All dimensions are in inches *(mm)*.

Frame Size	A	ØB	ØC	ØD	E	F	G	J	K	L
4A	2.36 *(60)*	4.72 *(120)*	7.09 *(180)*	9.84 *(250)*	0.16 *(4)*	0.59 *(15)*	6.30 *(160)*	0.55 *(14)*	4	8.46 *(215)*
4B	2.40 *(61)*	5.51 *(140)*	9.06 *(230)*	11.8 *(300)*	0.16 *(4)*	0.63 *(16)*	7.40 *(188)*	0.55 *(14)*	4	10.4 *(265)*
4C	2.87 *(73)*	6.50 *(165)*	9.84 *(250)*	13.8 *(350)*	0.20 *(5)*	0.71 *(18)*	7.95 *(202)*	0.71 *(18)*	4	11.8 *(300)*
4D	3.15 *(80)*	7.68 *(195)*	13.8 *(350)*	17.7 *(450)*	0.20 *(5)*	0.87 *(22)*	9.25 *(235)*	0.71 *(18)*	8	15.8 *(400)*
4E	3.15 *(80)*	8.66 *(220)*	13.8 *(350)*	17.7 *(450)*	0.20 *(5)*	0.87 *(22)*	9.57 *(243)*	0.71 *(18)*	8	15.8 *(400)*
4F	2.56 *(65)*	9.45 *(240)*	21.7 *(550)*	26.0 *(660)*	0.20 *(5)*	0.94 *(24)*	10.0 *(255)*	0.87 *(22)*	8	23.6 *(600)*

Foot Mounted

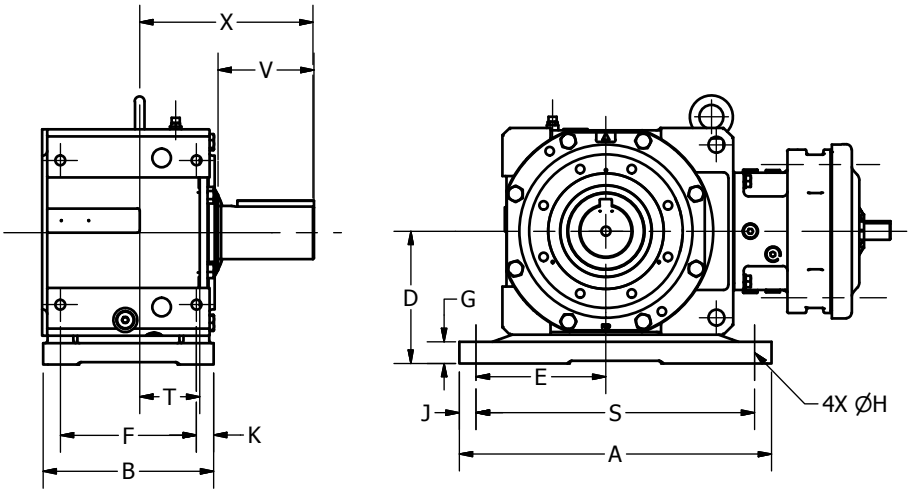

All dimensions are in inches *(mm)*.

Frame Size	A	B	D	E	F	G	ØH	J	K	S	T	V	X
4A	12.6 *(320)*	7.95 *(202)*	5.51 *(140)*	5.31 *(135)*	6.30 *(160)*	0.98 *(25)*	0.55 *(14)*	0.79 *(20)*	0.83 *(21)*	11.0 *(280)*	2.83 *(72)*	3.54 *(90)*	7.48 *(190)*
4B	15.2 *(385)*	9.65 *(245)*	6.69 *(170)*	6.30 *(160)*	7.68 *(195)*	1.38 *(35)*	0.71 *(18)*	0.79 *(20)*	0.98 *(25)*	13.6 *(345)*	3.74 *(95)*	4.53 *(115)*	9.53 *(242)*
4C	19.9 *(505)*	10.6 *(270)*	8.27 *(210)*	7.68 *(195)*	8.27 *(210)*	1.57 *(40)*	0.87 *(22)*	1.18 *(30)*	1.18 *(30)*	17.5 *(445)*	3.58 *(91)*	5.71 *(145)*	10.8 *(274)*
4D	22.1 *(560)*	12.6 *(320)*	9.65 *(245)*	9.25 *(235)*	10.2 *(260)*	1.77 *(45)*	1.02 *(26)*	1.18 *(30)*	1.18 *(30)*	19.7 *(500)*	4.53 *(115)*	6.69 *(170)*	12.8 *(325)*
4E	25.6 *(650)*	14.0 *(355)*	10.8 *(275)*	10.6 *(270)*	11.0 *(280)*	1.77 *(45)*	1.30 *(33)*	1.38 *(35)*	1.50 *(38)*	22.8 *(580)*	4.57 *(116)*	7.87 *(200)*	14.3 *(363)*
4F	29.1 *(740)*	15.8 *(400)*	12.6 *(320)*	11.8 *(300)*	12.6 *(320)*	2.56 *(65)*	1.30 *(33)*	1.38 *(35)*	1.57 *(40)*	26.4 *(670)*	4.43 *(113)*	8.27 *(210)*	15.8 *(400)*

Dimensions shown are for reference only and are subject to change without notice, unless certified.
Certified prints are available after receipt of an order; consult factory.

Shrink Disc

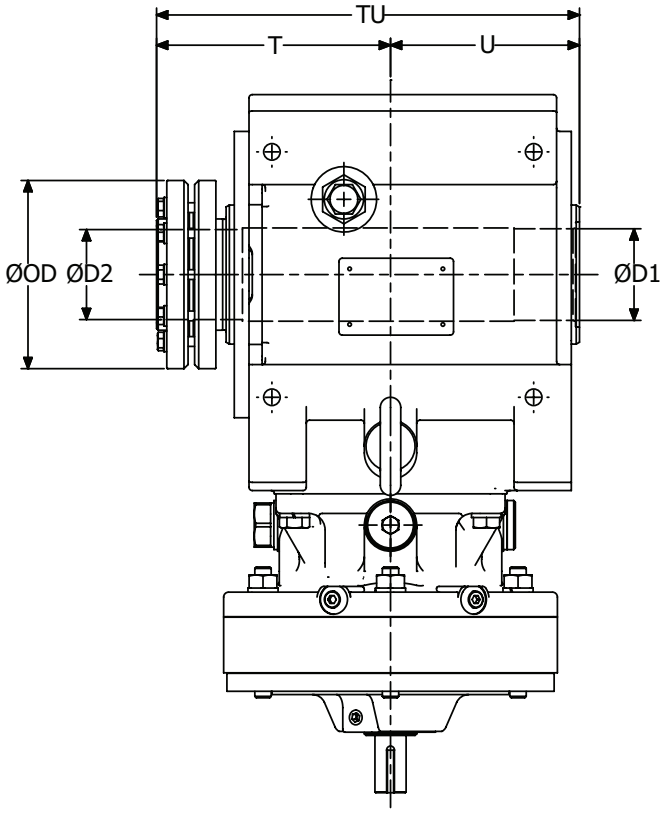

Left Projecting Shrink Disc

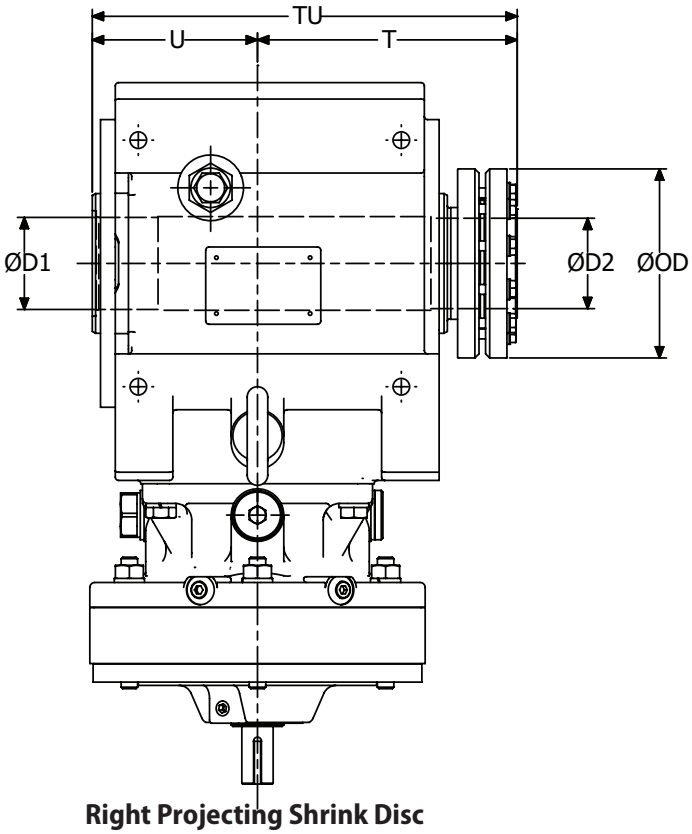

Right Projecting Shrink Disc

All dimensions are in inches *(mm)*.

Frame Size	ØD1	ØD2	ØOD	TU	Left Projecting Shrink Disc		Right Projecting Shrink Disc	
					T	U	T	U
4A	2.20 *(56)*	2.17 *(55)*	4.53 *(115)*	10.2 *(259)*	5.28 *(134)*	4.90 *(125)*	6.40 *(163)*	3.78 *(96)*
4B	2.60 *(66)*	2.56 *(65)*	5.71 *(145)*	12.0 *(304)*	6.76 *(172)*	5.19 *(132)*	6.95 *(177)*	5.00 *(127)*
4C	2.99 *(76)*	2.95 *(75)*	6.69 *(170)*	13.3 *(337)*	7.11 *(181)*	6.14 *(156)*	8.17 *(208)*	5.08 *(129)*
4D	3.39 *(86)*	3.35 *(85)*	7.28 *(185)*	16.0 *(408)*	8.76 *(223)*	7.28 *(185)*	9.94 *(253)*	6.10 *(155)*
4E	3.98 *(101)*	3.94 *(100)*	9.06 *(230)*	17.3 *(441)*	9.07 *(231)*	8.27 *(210)*	10.9 *(278)*	6.42 *(163)*
4F	4.76 *(121)*	4.72 *(120)*	11.4 *(290)*	20.2 *(513)*	10.6 *(268)*	9.65 *(245)*	12.7 *(323)*	7.48 *(190)*

Sold & Serviced By:
ELECTROMATE
Toll Free Phone (877) SERVO98
www.electromate.com
sales@electromate.com

Dimensions shown are for reference only and are subject to change without notice, unless certified.
Certified prints are available after receipt of an order; consult factory.

Options

Shrink Disc - Recommended Driven Inch Shaft Dimensions

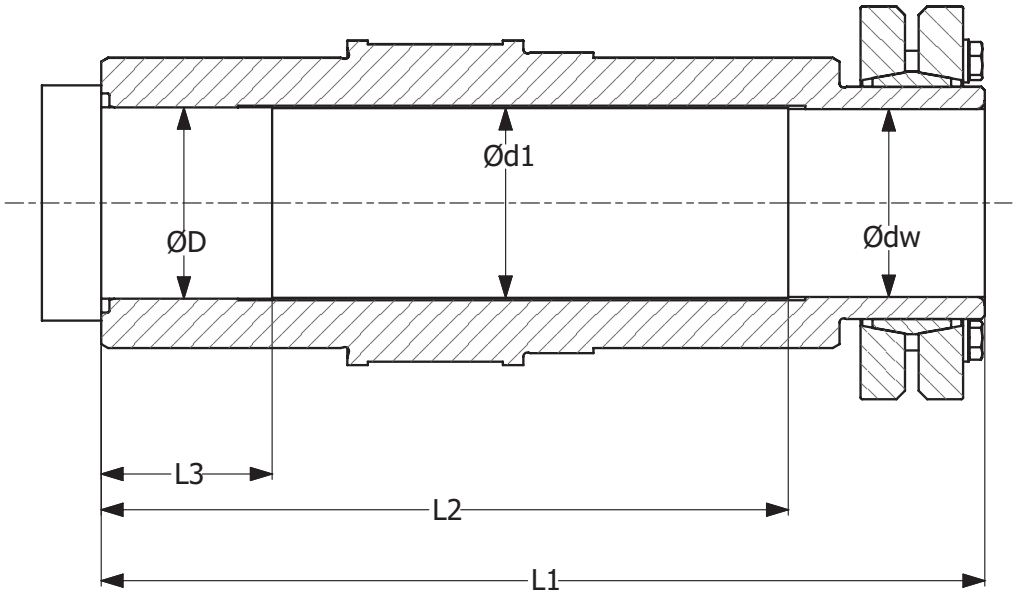

Recommendations for the design of the driven shaft if Shrink Disc connection method is selected:

- When ordering the Cyclo® BBB4 with a shrink disc output option, be sure to designate the orientation (left or right) in which to install the shrink disc.
- Once the product is shipped from the Sumitomo factory, the orientation of the shrink disc **cannot** be changed in the field.
- When designing the driven shaft to be inserted into the shrink disc, refer to the table below for shaft design recommendations.

All dimensions are in inches.

Model	Driven Shaft Recommended Dimensions							
	Ødw	Ødw tolerance	Ød1	ØD	ØD tolerance	L1	L2	L3
4A100, 4A105 4A110, 4A115 4A120, 4A125 4A140, 4A145	1-15/16 2 2-3/16	h6: +0/-0.0006 h6: +0/-0.0007 h6: +0/-0.0007	1.91 1.98 2.19	1.98 2.04 2.22	h7: +0/-0.0010 h7: +0/-0.0012 h7: +0/-0.0012	10.18	7.91	1.97
4B120, 4B125 4B140, 4B145 4B160, 4B165	2 2-3/16 2-3/8 2-7/16	h6: +0/-0.0007	1.98 2.19 2.39 2.46	2.04 2.22 2.41 2.48	h7: +0/-0.0012	11.95	9.60	1.97
4C140, 4C145 4C160, 4C165 4C170, 4C175	2-3/4 2-15/16	h6: +0/-0.0007	2.77 2.97	2.79 2.99	h7: +0/-0.0012	13.25	10.63	1.97

Sold & Serviced By:
ELECTROMATE
Toll Free Phone (877) SERVO98
www.electromate.com
sales@electromate.com

Dimensions shown are for reference only and are subject to change without notice, unless certified. Certified prints are available after receipt of an order; consult factory.

Shrink Disc - Recommended Driven Metric Shaft Dimensions

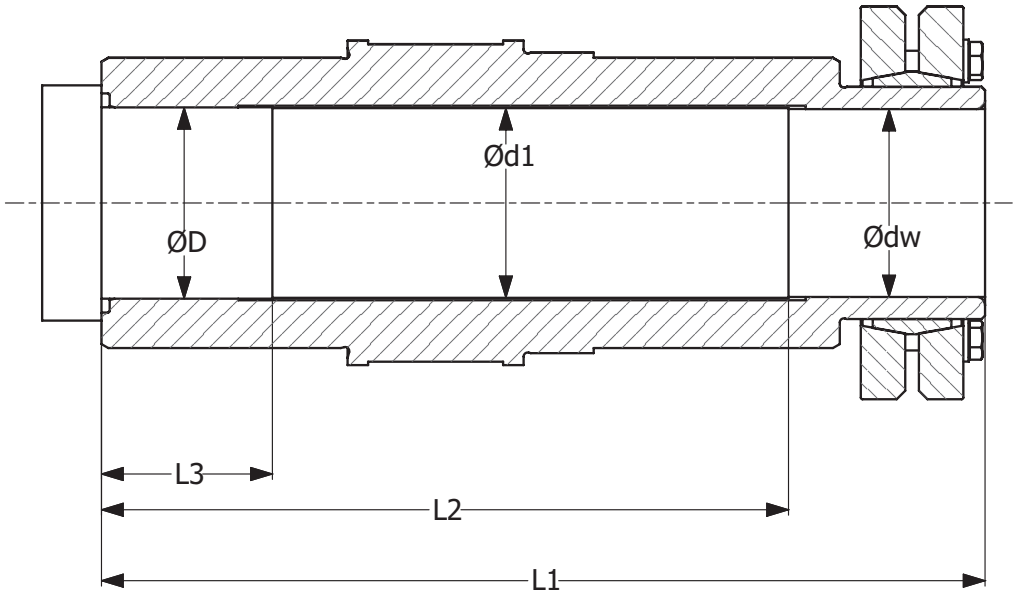

All dimensions are in mm.

Model	Driven Shaft Recommended Dimensions							
	Ødw	Ødw tolerance	Ød1	ØD	ØD tolerance	L1	L2	L3
4A100, 4A105 4A110, 4A115	55.00	h6: +0/-0.019	55.50	56.00	h7: +0/-0.030	258.50	201.00	50.00
4B120, 4B125 4B140, 4B145	65.00	h6: +0/-0.019	65.50	66.00	h7: +0/-0.030	303.50	244.00	50.00
4C160, 4C165 4C170, 4C175	75.00	h6: +0/-0.019	75.50	76.00	h7: +0/-0.030	336.50	270.00	50.00
4D170, 4D175 4D180, 4D185	85.00	h6: +0/-0.022	85.50	86.00	h7: +0/-0.035	407.50	325.00	65.00
4E180, 4E185 4E190, 4E195	100.00	h6: +0/-0.022	100.50	101.00	h7: +0/-0.035	440.50	358.00	65.00
4F180, 4F185 4F190, 4F195	120.00	h6: +0/-0.022	120.50	121.00	h7: +0/-0.035	513.00	415.00	98.00

Sold & Serviced By:
ELECTROMATE
Toll Free Phone (877) SERVO98
www.electromate.com
sales@electromate.com

Options

Torque Arm Turnbuckle Type[1]

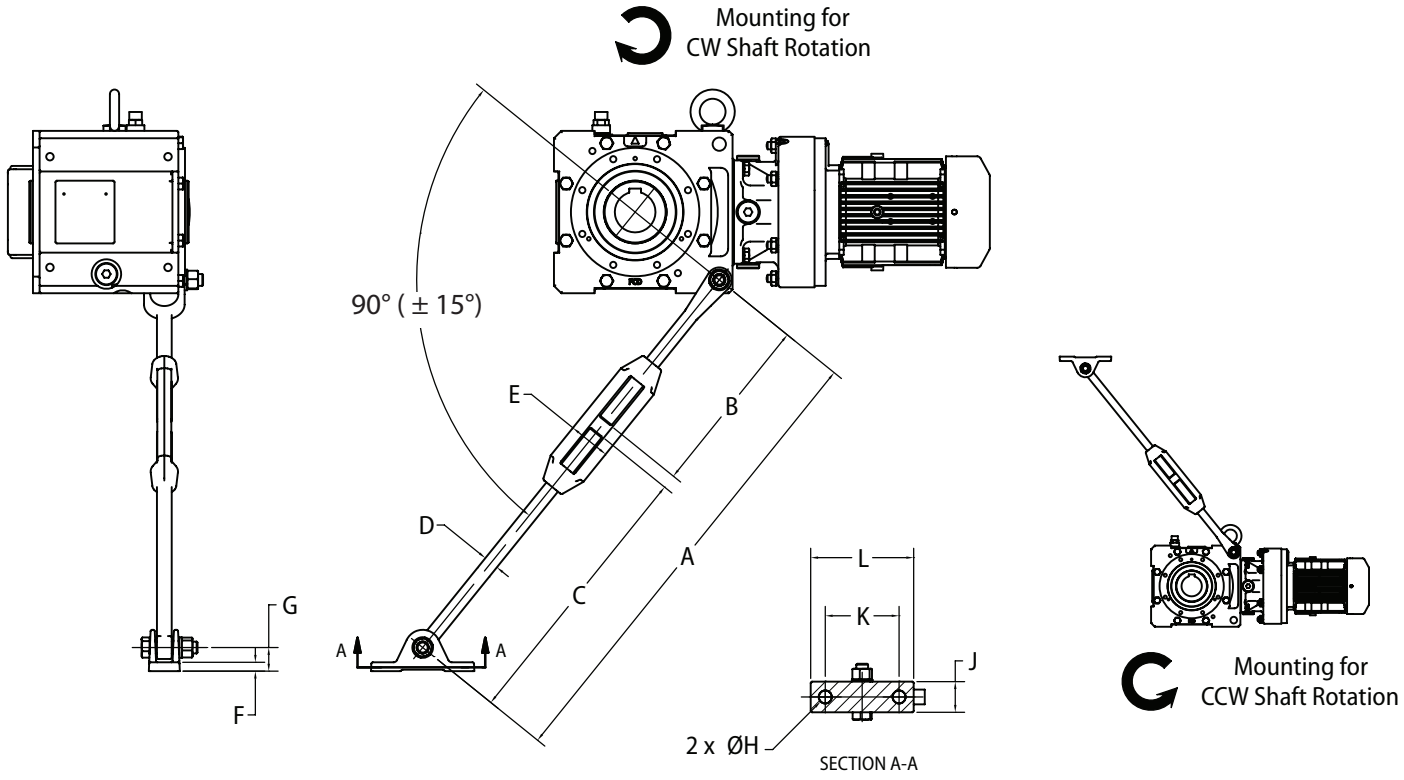

All dimensions are in inches *(mm)*.

Turnbuckle Type Torque Arm Dimensions												
Frame Size	A Min	A Max	B	C	D Thread	E	F	G	ØH	J	K	L
4A	25.2 *(640)*	28.7 *(730)*	9.69 *(246)*	14.8 *(375)*	M20	2.24 *(57)*	0.47 *(12.0)*	1.26 *(32)*	0.69 *(17.5)*	1.65 *(42)*	3.94 *(100)*	5.51 *(140)*
4B	26.0 *(660)*	29.5 *(750)*	10.4 *(263)*	14.8 *(375)*	M24	2.32 *(59)*	0.81 *(20.5)*	2.13 *(54)*	0.69 *(17.5)*	2.76 *(70)*	4.76 *(121)*	6.61 *(168)*
4C	26.0 *(660)*	29.5 *(750)*	10.4 *(263)*	14.8 *(375)*	M24	2.32 *(59)*	0.81 *(20.5)*	2.13 *(54)*	0.69 *(17.5)*	2.76 *(70)*	4.76 *(121)*	6.61 *(168)*
4D, 4E	33.9 *(860)*	37.4 *(950)*	18.3[2] *(465)* [2]	14.8 *(375)*	M24	2.32 *(59)*	0.81 *(20.5)*	2.13 *(54)*	0.69 *(17.5)*	2.76 *(70)*	4.76 *(121)*	6.61 *(168)*

Sold & Serviced By:
ELECTROMATE
Toll Free Phone (877) SERVO98
www.electromate.com
sales@electromate.com

Note: [1] The Cyclo® BBB4 is shown in Y1 mounting position; use two turnbuckle torque arms if application requires shaft rotation in both directions and use torque arm in tension, not compression. Consult Operation and Maintenance Manual or the Factory when mounting in positions other than Y1.
[2] Value may vary from shown.
[3] Turnbuckle Type torque arm is not available for size F Cyclo(R) BBB4 units. Consult Factory for F-size torque arm type and dimensions.

Dimensions shown are for reference only and are subject to change without notice, unless certified.
Certified prints are available after receipt of an order; consult factory.

Torque Arm T-Type[1]

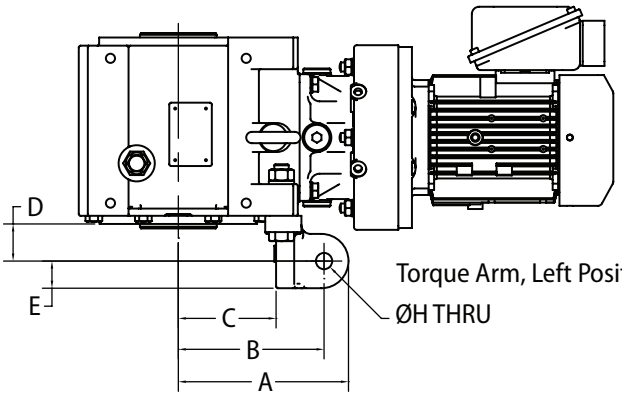

Torque Arm, Left Position

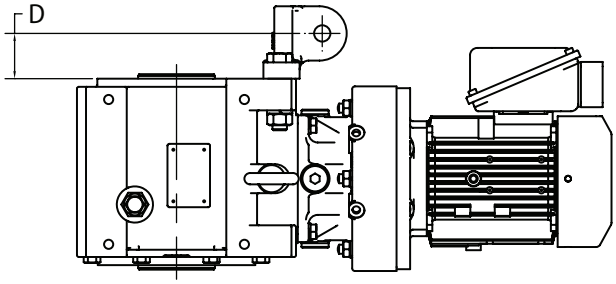

Torque Arm, Right Position

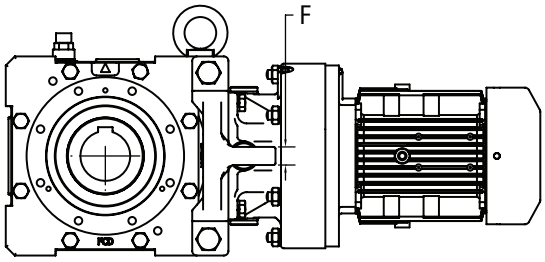

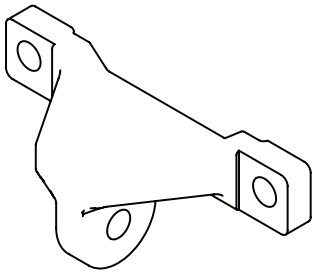

All dimensions are in inches *(mm)*.

T- Type Torque Arm Dimensions								
Frame Size	**A**	**B**	**C**	**D Left [2]**	**D Right [2]**	**E**	**F**	**ØH**
4A	7.40 *(188)*	6.34 *(161)*	4.25 *(108)*	1.61 *(41)*	1.97 *(50)*	1.18 *(30)*	0.79 *(20)*	0.71 *(18)*
4B	8.98 *(228)*	7.68 *(195)*	5.00 *(127)*	2.09 *(53)*	2.44 *(62)*	1.42 *(36)*	1.13 *(29)*	0.87 *(22)*
4C	10.8 *(274)*	9.13 *(232)*	6.14 *(156)*	2.60 *(66)*	2.95 *(75)*	1.77 *(45)*	1.25 *(32)*	1.02 *(26)*
4D	12.9 *(327)*	11.0 *(279)*	7.40 *(188)*	3.19 *(81)*	3.58 *(91)*	2.17 *(55)*	1.50 *(38)*	1.30 *(33)*
4E	14.2 *(361)*	12.1 *(306)*	8.27 *(210)*	3.17 *(81)*	3.58 *(91)*	2.17 *(55)*	1.42 *(36)*	1.30 *(33)*

Sold & Serviced By:
ELECTROMATE
Toll Free Phone (877) SERVO98
www.electromate.com
sales@electromate.com

Note: [1] The Cyclo® BBB4 is shown in Y1 mounting position
[2] D dimension is from flange-mount casing surface to hole **Ø**H.
[3] Turnbuckle Type torque arm is not available for size F Cyclo(R) BBB4 units. Consult Factory for F-size torque arm type and dimensions.

Dimensions shown are for reference only and are subject to change without notice, unless certified.
Certified prints are available after receipt of an order; consult factory.

Options

Screw Conveyor Drive

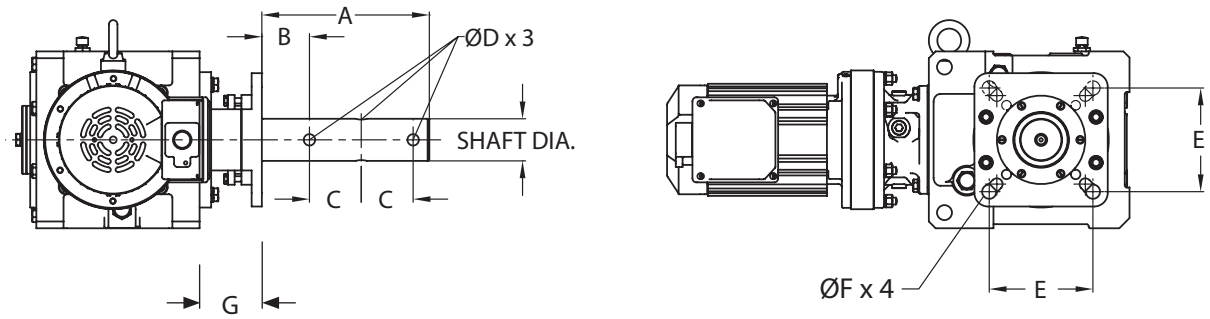

- The Screw Conveyor option design conforms to established CEMA inch dimensions.
- Complete Cyclo® BBB screw conveyor drive consists of reducer, CEMA drive shaft assembly and mounting adapter kit.
- CEMA drive shafts are three hole style. Two hole drives available on request.

All dimensions are in inches.

Model	Shaft Diameter	To Fit Screw Diameter	A	B	C	ØD	E	ØF
4A, 4B	1-1/2	6 to 9	9.00	2.13	3.00	17/32	4.00	0.531
	2	9 to 12	9.00	2.13	3.00	21/32	0.38	0.669
	2-7/16	12 to 14	9.69	2.75	3.00	21/32	5.63	0.669
	3	12 to 20	9.88	2.88	3.00	25/32	6.00	0.827
4C, 4D	2	9 to 12	9.00	2.13	3.00	21/32	5.13	0.669
	2-7/16	12 to 14	9.69	2.75	3.00	21/32	5.63	0.669
	3	12 to 20	9.88	2.88	3.00	25/32	6.00	0.827
	3-7/16	18 to 24	13.10	3.88	4.00	29/32	6.75	0.827
4E	2-7/16	12 to 14	9.69	2.75	3.00	21/32	5.63	0.669
	3	12 to 20	9.88	2.88	3.00	25/32	6.00	0.827
	3-7/16	18 to 24	13.10	3.88	4.00	29/32	6.75	0.827

Model	G	
	Cast Iron Adapter	Fabricated Steel Adapter
A	4.17	3.60
B	3.96	3.60
C	4.31	3.92
D	4.65	4.25
E	5.93	5.49

Shaft Option 1: Standard 'Taper Grip Hub' 3-Hole Screw Conveyor Steel Shafts

Model	Drive Shaft Diameters & CEMA Drive Shaft Assembly Part Number					Adapter Kit	
	Ø 1-1/2"	Ø 2"	Ø 2-7/16"	Ø 3"	Ø 3-7/16"	Cast Iron Option	Fabricated steel Option
4A	116E4108-C3	116E4200-C3	116E4207-C3	116E4300-C3	-	118A4050	118A4040
4B	116F4108-C3	116F4200-C3	116F4207-C3	116F4300-C3	-	118B4050	118B4040
4C	-	116G4200-C3	116G4207-C3	116G4300-C3	116G4307-C3	118C4050	118C4040
4D	-	116H4200-C3	116H4207-C3	116H4300-C3	116H4307-C3	118D4050	118D4040
4E	-	-	116J4207-C3	116J4300-C3	116J4307-C3	118E4050	118E4040

Shaft Option 2: Standard 'Keyed' 3-Hole Screw Conveyor Shafts [Steel and Stainless steel options]

Model	Drive Shaft Diameters & CEMA Drive Shaft Assembly Part Number [3]					Adapter Kit	
	Ø 1-1/2"	Ø 2"	Ø 2-7/16"	Ø 3"	Ø 3-7/16"	Cast Iron Option	Fabricated steel Option
4A	118A5108-C3/ S3	118A5200-C3/ S3	118A5207-C3/ S3	118A5300-C3/ S3	-	118A4060	118A4040
4B	118B5108-C3/ S3	118B5200-C3/ S3	118B5207-C3/ S3	118B5300-C3/ S3	-	118B4060	118B4040
4C	-	118C5200-C3/ S3	118C5207-C3/ S3	118C5300-C3/ S3	118C5307-C3/ S3	118C4060	118C4040
4D	-	118D5200-C3/ S3	118D5207-C3/ S3	118D5300-C3/ S3	118D5307-C3/ S3	-	118D4040
4E	-	-	118E5207-C3/ S3	118E5300-C3/ S3	118E5307-C3/ S3	-	118E4040

Note: [1] The dimension shown is E maximum.
[2} Use suffix 'C3' for Carbon Steel, or 'S3' for Stainless Steel (AISI316) shaft material

Dimensions shown are for reference only and are subject to change without notice, unless certified.
Certified prints are available after receipt of an order; consult factory.

Shaft Diameters - Keyed Hollow Bore

All dimensions are in inches.

Bore (in)	Frame Size					
	4A	4B	4C	4D	4E	4F
1-7/16″	○					
1-1/2″	○					
1-5/8″	○					
1-11/16″	○					
1-3/4″	○					
1-13/16″	○	○				
1-7/8″	○	○				
1- 15/16″	● ◊	○				
2″	● ◊	○				
2-3/16″	● ◊	● ◊				
2-1/4″		○				
2-3/8″		● ◊	○			
2-7/16″		● ◊	○			
2-1/2″		○	○			
2-9/16″			○			
2-5/8″			○			
2-3/4″			● ◊			
2-7/8″			○			
2-15/16″			● ◊	○		
3″			○	○		
3-1/8″			○	○		
3-3/16″			○	○		
3-1/4″			○	○		
3-3/8″			○	○	○	○
3-7/16″			○	●	○	○
3-1/2″			○	○	○	○
3-5/8″				○	○	○
3-3/4″				○	○	○
3-7/8″				○	○	○
3-15/16″				○	○	○
4″				○	●	○
4-7/16″						○
4-1/2″						●
4-3/4″						○

All dimensions are in millimeters.

Bore (mm)	Frame Size					
	4A	4B	4C	4D	4E	4F
35	○					
40	○					
45	○	○				
50	○	○				
55	●	○				
60		○	○			
65		●	○			
70			○			
75			●	○		
80				○		
85				●	○	
90				○	○	
95					○	
100					●	
105					○	
110						○
115						○
120						●

● Standard shaft size (Carbon steel material)
○ On-demand shaft size (Carbon steel material)
◊ Standard Stainless Steel shaft size

Sold & Serviced By:
ELECTROMATE
Toll Free Phone (877) SERVO98
www.electromate.com
sales@electromate.com

Note: 1) The customer is responsible for validating the strength of the driven shaft.
2) Consult factory for the price and delivery of 'On-demand' shaft sizes.
3) If the required shaft size is different than the above mentioned sizes, please consult the factory.

Options

Shaft Diameters - Shrink Disc

All dimensions are in inches.

Bore (in)	Frame Size					
	4A	4B	4C	4D	4E	4F
1- 15/16"	● ◊					
2"	● ◊	●				
2-3/16"	● ◊	● ◊				
2-3/8"		● ◊				
2-7/16"		● ◊				
2-3/4"			● ◊			
2-15/16"			● ◊			
3-15/16"						

All dimensions are in millimeters.

Bore (mm)	Frame Size					
	4A	4B	4C	4D	4E	4F
55	●					
65		●				
66						
75			●			
85				●		
100					●	
120						●

- ● Standard shaft size (Carbon steel material)
- ○ Optional shaft size (Carbon steel material)
- ◊ Standard Stainless Steel shaft size

Note: 1) Shrink disc bore with LEFT as well as RIGHT projections are available (refer figures on page 3.5).
2) Shrink disc bore size mentioned in above is ødw dimension of the Table on page 3.6
3) If the required shaft size is different than the above mentioned sizes, please consult the factory.

Shaft Diameters - Taper Grip Bushing

Please refer øU dimensions in 'Dimensions' section for the shaft size range (Min. & Max.)

Sold & Serviced By:
ELECTROMATE
Toll Free Phone (877) SERVO98
www.electromate.com
sales@electromate.com

Shaft Diameters- Solid Shaft

All dimensions are in inches.

Bore (in)	Frame Size					
	4A	4B	4C	4D	4E	4F
1-7/16"	○					
1-1/2"	○					
1-9/16"	○					
1-5/8"	○					
1-3/4"	○					
1-7/8"	○	○				
1-15/16"	○	○				
2"	●	○				
2-1/8"	○	○				
2-3/16"	○	○				
2-1/4"		○				
2.236"		○				
2-3/8"		○	○			
2-7/16"		○	○			
2-1/2"		○	○			
2-5/8"		○	○			
2-3/4"		○	○			
2-7/8"		●	○	○		
2-15/16"			○	○		
3"			○	○		
3-1/8"			●	○		
3-1/4"				○		
3-3/8"				○	○	
3-7/16"				○	○	
3-5/8"				●	○	
3-7/8"					○	
4"					○	
4-3/8"					●	○
4-7/16"						○
4-1/2"					○	○
4-5/8"						○
4-3/4"						●

All dimensions are in millimeters.

Bore (mm)	Frame Size					
	4A	4B	4C	4D	4E	4F
25	○					
45	○					
50	●					
55						
60		○				
65		●				
70						
75			○			
80			●			
85				○		
90				○		
95				●	○	
100					○	
110					●	
115						
120						
130						●

● Standard shaft size (Carbon steel material)
○ Optional shaft size (Carbon steel material)

Note: 1) The customer is responsible for validating the strength of the driven shaft.
2) Consult factory for the price and delivery of 'On-demand' shaft sizes.
3) If the required shaft size is different than the above mentioned sizes, please consult the factory.
4) Solid shaft with LEFT, RIGHT as well as DOUBLE EXTENDED projections are available.

Options

Industry Packages

When ordering, add the Special Specification Code (SSC) that meets your requirements to the end of the model number, to obtain the features listed below. Example: LHYMS3-4A105KB-EPY1-39 YBA5, Q8E: 2"

Note that Q8E is the output diameter SSC code required at the end of every model number (refer to Nomenclature Requirements page 2.4)

Four food-grade packages are available for use in machinery where there is incidental food contact. (Chemi SHIELD, SHIELD360, Food-Grade, and Ultra SHIELD360)

The food-grade optional packages are available for BBB4 frame sizes A, B, and C .

Modication	Chemical Duty	Chemi SHIELD 360*	SHIELD 360*	Ultra SHIELD 360*	Food Grade	Low Temp	High Temp	Weather Proof IP54	Wash-down IP55
Special Specification Code	**A32**	**YBA7**	**YBA5**	**YBA8**	**YBA1**	**C30**	**D50**	**A11/A10**	**A1C/N43**
Motor Portion									
Gasketed Conduit Box	X	X	X		X			X	X
V Ring Seal-Fan End	X	X	X		X			X	X
Special Oil Seal						X	X		
Special Windings						X	X		
Sealer @ Jpines	X	X	X		X			X	X
Special Fan						X			X
Epoxy Paint	X								
FDA Epoxy Paint			X		X				
FDA White Acrylic Top Coat		X							
FDA Stainless Grey Acrylic Top Coat									
FDA Stainless Grey 2 Part Epoxy Clear Top Coat	X	X	X						
Brake Cover Seal									
Sever Duty Breather	X	X	X	X				X	X
Epoxy Paint	X								X
FDA Epoxy Paint					X				
FDA White Acrylic Top Coat			X						
FDA Stainless Grey Acrylic Top Coat		X							
FDA Stainless Grey 2 Part Epoxy Clear Top Coat				X					
FDA Grease Oil/Grease			X	X	X				
Low Temp Grease/Oil						X			
High Temp Grease/Oil							X		
Double Output Seals			X		X	X	X	X	X
Corrosion Preventative Plugs		X		X			X		
Low Temperature Seals									
FKM AM Cassette Seal		X	X	X		X			
FKM (Viton) Seal	X								
Stainless or Tesa Namplate	X	X		X					
Stainless Output Shaft		X		X					

Stainless Steel Solid Shaft - maximum torque ratings with standard solid shaft diameters are the same as those listed in this catalog for standard models. Consult the factory when ordering smaller than standard diameters, or if there will be overhung load.

* UltraShield360° ™ available in quill input option only
Low Temp Package = -30 degrees C Maximum. For lower temperature requirements consult factory.
High Temp Package = 50 degrees C Maximum. For higher temperature requirements consult factory.

Sold & Serviced By:
ELECTROMATE
Toll Free Phone (877) SERVO98
www.electromate.com
sales@electromate.com

4

Technical Information

Sold & Serviced By:
ELECTROMATE
Toll Free Phone (877) SERVO98
www.electromate.com
sales@electromate.com

Exact Ratios

Bevel Buddybox catalog ratio 11, 13, 14, 16, and 18 utilize a planetary gearset for the first reduction stage.

The exact ratio of planetary gearing can be calculated using the following formula:

$i_{PLANETARY} = (Z_{SUN} + Z_{RING}) / Z_{SUN}$

where: Z_{SUN} = Number of teeth in the sun gear

Z_{RING} = Number of teeth in the ring gear

The overall gearbox ratio can be determined using the following formula:

$i_{OVERALL} = (Z_{GEAR} / Z_{PINION}) \times i_{PLANETARY}$

where: Z_{GEAR} = Number of teeth in the bevel gear

Z_{PINION} = Number of teeth in the bevel pinion

Table 4.1 BBB4 with Planetary Input - Exact Ratios

Nominal Ratio	Frame Size	Gearing Tooth Count				Calculated Ratio $i_{OVERALL}$
		Bevel		Planetary		
		Z_{GEAR}	Z_{PINION}	Z_{SUN}	Z_{RING}	
11	4A100/5	35	10	46	92	10.50
	4A120/5	35	10	60	120	10.50
	4A140/5	35	10	54	114	10.89
	4B120/5	35	10	60	120	10.50
	4B140/5	35	10	54	114	10.89
	4B160/5	35	10	60	126	10.85
	4C140/5	35	10	54	114	10.89
	4C160/5	35	10	60	126	10.85
	4C170/5	35	10	58	122	10.86
	4D170/5	35	10	58	122	10.86
	4D180/5	35	10	68	136	10.50
	4E170/5	35	10	58	122	10.86
	4E180/5	35	10	68	136	10.50
	4E190/5	35	10	66	138	10.82
	4F180/5	35	10	68	136	10.50
	4F190/5	35	10	66	138	10.82
13	4A100/5	32	10	34	104	12.99
	4A120/5	32	10	45	135	12.80
	4A140/5	32	10	43	131	12.95
	4B120/5	32	10	45	135	12.80
	4B140/5	32	10	43	131	12.95
	4B160/5	32	10	48	144	12.80
	4C140/5	32	10	43	131	12.95
	4C160/5	32	10	48	144	12.80
	4C170/5	32	10	44	136	13.09
	4D170/5	32	10	44	136	13.09
	4D180/5	32	10	44	136	13.09
	4E170/5	32	10	44	136	13.09
	4E180/5	32	10	44	136	13.09
	4E190/5	32	10	45	138	13.01
	4F180/5	32	10	44	136	13.09
	4F190/5	32	10	45	138	13.01

Table 4.1 BBB4 with Planetary Input - Exact Ratios continued

Nominal Ratio	Frame Size	Gearing Tooth Count				Calculated Ratio
		Bevel		Planetary		
		Z_{GEAR}	Z_{PINION}	Z_{SUN}	Z_{RING}	$i_{OVERALL}$
14	4A100/5	35	10	34	104	14.21
	4A120/5	35	10	45	135	14.00
	4A140/5	35	10	43	131	14.16
	4B120/5	35	10	45	135	14.00
	4B140/5	35	10	43	131	14.16
	4B160/5	35	10	48	144	14.00
	4C140/5	35	10	43	131	14.16
	4C160/5	35	10	48	144	14.00
	4C170/5	35	10	44	136	14.32
	4D170/5	35	10	44	136	14.32
	4D180/5	35	10	44	136	14.32
	4E170/5	35	10	44	136	14.32
	4E180/5	35	10	44	136	14.32
	4E190/5	35	10	45	138	14.23
	4F180/5	35	10	44	136	14.32
	4F190/5	35	10	45	138	14.23
16	4A100/5	32	10	30	114	15.36
	4A120/5	32	10	38	148	15.66
	4A140/5	32	10	36	144	16.00
	4B120/5	32	10	38	148	15.66
	4B140/5	32	10	36	144	16.00
	4B160/5	32	10	39	159	16.25
	4C140/5	32	10	36	144	16.00
	4C160/5	32	10	39	159	16.25
	4C170/5	32	10	38	154	16.17
	4D170/5	32	10	38	154	16.17
	4D180/5	32	10	35	136	15.63
	4E170/5	32	10	38	154	16.17
	4E180/5	32	10	35	136	15.63
	4E190/5	32	10	36	138	15.47
	4F180/5	32	10	35	136	15.63
	4F190/5	32	10	36	138	15.47
18	4A100/5	35	10	30	114	16.80
	4A120/5	35	10	38	148	17.13
	4A140/5	35	10	36	144	17.50
	4B120/5	35	10	38	148	17.13
	4B140/5	35	10	36	144	17.50
	4B160/5	35	10	39	159	17.77
	4C140/5	35	10	36	144	17.50
	4C160/5	35	10	39	159	17.77
	4C170/5	35	10	38	154	17.68
	4D170/5	35	10	38	154	17.68
	4D180/5	35	10	35	136	17.10
	4E170/5	35	10	38	154	17.68
	4E180/5	35	10	35	136	17.10
	4E190/5	35	10	36	138	16.92
	4F180/5	35	10	35	136	17.10
	4F190/5	35	10	36	138	16.92

Exact Ratios continued

Bevel Buddybox catalog ratios greater than 18:1 utilize Cyclo as the first (or first and second) reduction stage

Cyclo reduction ratios are exact thus the exact overall Bevel Buddybox reduction ratio can be calculated as:

$i_{OVERALL} = (Z_{GEAR} / Z_{PINION}) \times i_{CYCLO}$

where: Z_{GEAR} = Number of teeth in the bevel gear

Z_{PINION} = Number of teeth in the bevel pinion

Table 4.2 BBB4 with Cyclo Input - Exact Ratios

Single Reduction Cyclo

Nominal Ratio	Frame Size	Bevel Gear Tooth Count		Cyclo Ratio (i_{CYCLO})	Calculated Ratio $i_{OVERALL}$
		Z_{GEAR}	Z_{PINION}		
21	ALL[1]	35	10	6	21.00
22		32	10	7	22.40
25		35	10	7	24.50
28		35	10	8	28.00
35		32	10	11	35.20
39		35	10	11	38.50
46		35	10	13	45.50
53		35	10	15	52.50
60		35	10	17	59.50
67		32	10	21	67.20
74		35	10	21	73.50
80		32	10	25	80.00
88		35	10	25	87.50
102		35	10	29	101.50
112		32	10	35	112.00
123		35	10	35	122.50
151		35	10	43	150.50
179		35	10	51	178.50
207		35	10	59	206.50
249		35	10	71	248.50
305		35	10	87	304.50
417	4A10	35	10	119	416.50

Note [1]: 22:1 and 25:1 ratios are not available for 4A100/5 and 4A110/5 sizes.

Table 4.3 BBB4 with Cyclo Input - Exact Ratios

Double Reduction Cyclo

Nominal Ratio	Frame Size	Bevel Gearing Tooth Count		Cyclo Ratio (i_{CYCLO})	Calculated Ratio $i_{OVERALL}$
		Z_{GEAR}	Z_{PINION}		
364	ALL	35	10	104	364.0
424		35	10	121	423.5
501		35	10	143	500.5
578		35	10	165	577.5
683		35	10	195	682.5
809		35	10	231	808.5
956		35	10	273	955.5
1117		35	10	319	1116.5
1320		35	10	377	1319.5
1656		35	10	473	1655.5
1957		35	10	559	1956.5
2272		35	10	649	2271.5
2559		35	10	731	2558.5
2944		35	10	841	2943.5
3511		35	10	1003	3510.5
4365		35	10	1247	4364.5
5177		35	10	1479	5176.5
6472		35	10	1849	6471.5
7228		35	10	2065	7227.5
8880		35	10	2537	8879.5
10658		35	10	3045	10657.5
12184		35	10	3481	12183.5
15530		35	10	4437	15529.5
17966		35	10	5133	17965.5
21620		35	10	6177	21619.5
26492		35	10	7569	26491.5

Sold & Serviced By:
ELECTROMATE
Toll Free Phone (877) SERVO98
www.electromate.com
sales@electromate.com

Special Load Guidelines **Overhung Load**

Reducer/Gearmotor Output Shaft Allowable Overhung Load[1]

When a sprocket, sheave, or gear is mounted on the slowspeed of a reducer, an overhung load is applied on that shaft. It is necessary to check if the shaft of the Cyclo® BBB4 Speed Reducer will allow the overhung load. Calculate the overhung load using the following formulas:

1) Radial load, Pr

$$Pr = \frac{Tl}{R} \leq \frac{Pro}{Lf \cdot Cf \cdot Sf} \quad \text{(lbs, } N\text{)}$$

2) Axial Load, Pa

$$Pa \leq \frac{Pao}{Cf \cdot Sf} \quad \text{(lbs, } N\text{)}$$

3) When there is combined radial and axial loading on the output shaft

$$\left(\frac{Pr}{Pro} + \frac{Pa}{Pao}\right) \cdot Cf \cdot Sf \leq 1 \quad \text{(lbs, } N\text{)}$$

LEGEND
- **Pr** = Actual radial load (lbs, *N*)
- **Tl** = Actual transmitted torque on slow speed shaft of reducer (lb·in, *N·m*)
- **R** = Pitch circle radius of sprocket, gear, pulley, etc. (inch, meter)
- **Pro** = Allowable radial load (lbs, *N*)
- **Pa** = Actual axial load (lbs, *N*)
- **Pao** = Allowable axial load (lbs, *N*)
- **Cf** = Coupling factor
- **Sf** = Service factor
- **Lf** = Load Location factor = 1.0

The values shown in the tables within are the allowable OHL[2] when it is applied to the center of the solid shaft extension or at the load-side edge of the hollow bore. Please consult the factory when the center point of the load is located elsewhere.

Table 4.4 Coupling Factor, Cf

Type of Connection	Cf
General Purpose Chain	1.0
Machined Gear, Pinion or Synchronous Belt	1.25
V-Belt	1.5
Flat Belt	2.5

Table 4.5 Service Factor, Sf

Shock Factor	Sf
No Shock	1.0
Moderate Shock	1.5
Heavy Shock	2.0

Overhung Load, capacity for solid output shaft

OHL ratings assume there is no axial load applied to the shaft and that the unit is horizontal to floor/foundation. (Mounting feet at bottom or top.) Consult factory when it is wall mount or vertical position. When flange mounted, OHL location should be same side as flange. Consult factory when OHL is opposte flange side. Use ISO/JIS Class 12.9 for mounting hardware.

Loading position L is the distance from the output shaft shoulder

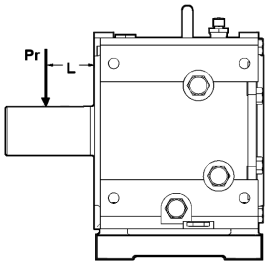

Pro from table must be ≥ Pr

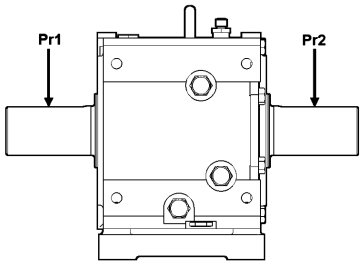

For double extension, Pr1 and Pr2 is assumed to be in the same direction. Pr0 from table must be ≥ Pr1+ Pr2

Note [1]: For output speeds that are in bewteen those detailed in Tables 4.6a through 4.7c, the overhung load capacity may be calculated through interpolation.
[2]: OHL = Overhung Load

Table 4.6a[1] **Allowable Overhung Load for Output Shaft (Solid Output Shaft) (Cf, Sf = 1)**

Force Units: lbs, (*N*)

Model	L inch *(mm)*	Output Shaft, RPM									
		5	10	20	30	35	45	50	60	75	90
	0.75 *(19.1)*	7170 *(31890)*	8360 *(37180)*	7190 *(31980)*	6110 *(27170)*	5740 *(25530)*	5160 *(22950)*	4940 *(21970)*	4570 *(20320)*	4120 *(18320)*	3790 *(16850)*
	1.00 *(25.4)*	6850 *(30460)*	7490 *(33310)*	6960 *(30950)*	5940 *(26420)*	5560 *(24730)*	5020 *(22320)*	4790 *(21300)*	4420 *(19660)*	3990 *(17740)*	3670 *(16320)*
	1.25 *(31.8)*	5940 *(26420)*	6240 *(27750)*	6240 *(27750)*	5760 *(25620)*	5410 *(24060)*	4870 *(21660)*	4640 *(20630)*	4290 *(19080)*	3890 *(17300)*	3570 *(15870)*
4A100	1.50 *(38.1)*	5230 *(23260)*	5340 *(23750)*	5340 *(23750)*	5340 *(23750)*	5260 *(23390)*	4740 *(21080)*	4520 *(20100)*	4170 *(18540)*	3770 *(16760)*	3470 *(15430)*
4A105 **4A110**	1.75 *(44.5)*	4670 *(20770)*	4670 *(20770)*	4670 *(20770)*	4670 *(20770)*	4670 *(20770)*	4590 *(20410)*	4390 *(19520)*	4070 *(18100)*	3670 *(16320)*	3370 *(14980)*
4A115 **4A120**	1.88 *(47.6)*	3970 *(17650)*	4170 *(18540)*	4170 *(18540)*	4170 *(18540)*	4170 *(18540)*	4170 *(18540)*	4170 *(18540)*	3970 *(17650)*	3570 *(15870)*	3290 *(14630)*
4A125 **4A140**	2.00 *(50.8)*	3420 *(15210)*	3740 *(16630)*	3740 *(16630)*	3740 *(16630)*	3740 *(16630)*	3740 *(16630)*	3740 *(16630)*	3740 *(16630)*	3490 *(15520)*	3190 *(14180)*
4A145	2.50 *(63.5)*	2970 *(13210*	3120 *(13870*	3120 *(13870*	3120 *(13870*	3120 *(13870*	3120 *(13870*	3120 *(13870*	3120 *(13870*	3120 *(13870*	3040 *(13520)*
	3.00 *(76.2)*	2610 *(11600)*	2670 *(11870)*	2670 *(11870)*	2670 *(11870)*	2670 *(11870)*	2670 *(11870)*	2670 *(11870)*	2670 *(11870)*	2670 *(11870)*	2670 *(11870)*
	3.50 *(88.9)*	2340 *(10400)*	2340 *(10400)*	2340 *(10400)*	2340 *(10400)*	2340 *(10400)*	2340 *(10400)*	2340 *(10400)*	2340 *(10400)*	2340 *(10400)*	2340 *(10400)*
	4.00 *(102)*	2110 *(9380)*	2080 *(9250)*	2080 *(9250)*	2080 *(9250)*	2080 *(9250)*	2080 *(9250)*	2080 *(9250)*	2080 *(9250)*	2080 *(9250)*	2080 *(9250)*
	0.75 *(19.1)*	11800 *(52480)*	11830 *(52610)*	8810 *(39180)*	7340 *(32640)*	6810 *(30290)*	6010 *(26730)*	5690 *(25300)*	5160 *(22950)*	4570 *(20320)*	4120 *(18320)*
	1.00 *(25.4)*	12350 *(54930)*	11530 *(51280)*	8610 *(38290)*	7160 *(31840)*	6660 *(29620)*	5860 *(26060)*	5560 *(24730)*	5040 *(22410)*	4470 *(19880)*	4020 *(17880)*
	1.25 *(31.8)*	12620 *(56130)*	11260 *(50080)*	8410 *(37400)*	6990 *(31090)*	6490 *(28860)*	5740 *(25530)*	5440 *(24190)*	4940 *(21970)*	4370 *(19430)*	3920 *(17430)*
	1.50 *(38.1)*	11720 *(52130)*	11010 *(48970)*	8210 *(36510)*	6840 *(30420)*	6340 *(28200)*	5610 *(24950)*	5310 *(23610)*	4820 *(21430)*	4270 *(18990)*	3820 *(16990)*
	1.75 *(44.5)*	10460 *(46520)*	10460 *(46520)*	8040 *(35760)*	6660 *(29620)*	6210 *(27620)*	5460 *(24280)*	5190 *(23080)*	4720 *(20990)*	4170 *(18540)*	3740 *(16630)*
4B120 **4B125**	1.88 *(47.6)*	8870 *(39450)*	9310 *(41410)*	7860 *(34960)*	6540 *(29080)*	6060 *(26950)*	5360 *(23840)*	5060 *(22500)*	4620 *(20540)*	4070 *(18100)*	3670 *(16320)*
4B140 **4B145**	2.00 *(50.8)*	7650 *(34020)*	8360 *(37180)*	7690 *(34200)*	6390 *(28420)*	5940 *(26420)*	5240 *(23300)*	4970 *(22100)*	4520 *(20100)*	3990 *(17740)*	3570 *(15870)*
4B160 **4B165**	2.50 *(63.5)*	6650 *(29570)*	6990 *(31090)*	6990 *(31090)*	6110 *(27170)*	5690 *(25300)*	5020 *(22320)*	4770 *(21210)*	4320 *(19210)*	3820 *(16990)*	3420 *(15210)*
	3.00 *(76.2)*	5870 *(26100)*	5990 *(26640)*	5990 *(26640)*	5890 *(26190)*	5460 *(24280)*	4820 *(21430)*	4570 *(20320)*	4140 *(18410)*	3670 *(16320)*	3290 *(14630)*
	3.50 *(88.9)*	5240 *(23300)*	5240 *(23300)*	5240 *(23300)*	5240 *(23300)*	5240 *(23300)*	4640 *(20630)*	4390 *(19520)*	3990 *(17740)*	3520 *(15650)*	3170 *(14100)*
	4.00 *(102)*	4720 *(20990)*	4640 *(20630)*	4640 *(20630)*	4640 *(20630)*	4640 *(20630)*	4470 *(19880)*	4240 *(18850)*	3840 *(17080)*	3390 *(15070)*	3040 *(13520)*
	4.50 *(114)*	4310 *(19170)*	4190 *(18630)*	4190 *(18630)*	4190 *(18630)*	4190 *(18630)*	4190 *(18630)*	4090 *(18190)*	3720 *(16540)*	3270 *(14540)*	2940 *(13070)*
	5.00 *(127)*	3320 *(14760)*	3490 *(15520)*	3490 *(15520)*	3490 *(15520)*	3490 *(15520)*	3490 *(15520)*	3490 *(15520)*	3470 *(15430)*	3070 *(13650)*	2740 *(12180)*

Sold & Serviced By:
ELECTROMATE
Toll Free Phone (877) SERVO98
www.electromate.com
sales@electromate.com

Note [1]: For output speeds that are in bewteen those detailed in Tables 4.6a through 4.7c, the overhung load capacity may be calculated through interpolation.

Table 4.6b Allowable Overhung Load for Output Shaft (Solid Output Shaft) (Cf, Sf = 1)

Force Units: lbs, (*N*)

Model	L inch *(mm)*	Output shaft, RPM									
		5	10	20	30	35	45	50	60	75	90
	0.75 *(19.1)*	16770 *(74590)*	16650 *(74050)*	12330 *(54840)*	10180 *(45280)*	9460 *(42070)*	8310 *(36960)*	7860 *(34960)*	7090 *(31530)*	6240 *(27750)*	5560 *(24730)*
	1.00 *(25.4)*	17560 *(78100)*	16280 *(72410)*	12060 *(53640)*	9960 *(44300)*	9240 *(41090)*	8110 *(36070)*	7690 *(34200)*	6940 *(30860)*	6090 *(27080)*	5440 *(24190)*
	1.25 *(31.8)*	17980 *(79970)*	15930 *(70850)*	11810 *(52530)*	9760 *(43410)*	9040 *(40200)*	7940 *(35310)*	7510 *(33400)*	6790 *(30200)*	5960 *(26510)*	5310 *(23610)*
	1.50 *(38.1)*	18210 *(80990)*	15580 *(69290)*	11530 *(51280)*	9540 *(42430)*	8840 *(39320)*	7790 *(34640)*	7360 *(32730)*	6640 *(29530)*	5840 *(25970)*	5210 *(23170)*
	1.75 *(44.5)*	18280 *(81300)*	15250 *(67830)*	11310 *(50300)*	9340 *(41540)*	8660 *(38510)*	7610 *(33840)*	7190 *(31980)*	6510 *(28950)*	5710 *(25390)*	5090 *(22640)*
4C140	1.88 *(47.6)*	17120 *(76140)*	14960 *(66540)*	11080 *(49280)*	9160 *(40740)*	8490 *(37760*	7460 *(33180)*	7060 *(31400)*	6360 *(28280)*	5590 *(24860)*	4990 *(22190)*
4C145 **4C160**	2.00 *(50.8)*	15780 *(70180)*	14660 *(65200)*	10860 *(48300)*	8990 *(39980)*	8310 *(36960)*	7310 *(32510)*	6910 *(30730)*	6240 *(27750)*	5490 *(24410)*	4890 *(21750)*
4C165 **4C170**	2.50 *(63.5)*	13690 *(60890)*	14080 *(62620)*	10430 *(46390)*	8640 *(38430)*	7990 *(35530)*	7040 *(31310)*	6640 *(29530)*	6010 *(26730)*	5260 *(23390)*	4720 *(20990)*
4C175	3.00 *(76.2)*	12090 *(53770)*	12330 *(54840)*	10060 *(44740)*	8310 *(36960)*	7710 *(34290)*	6760 *(30060)*	6390 *(28420)*	5790 *(25750)*	5060 *(22500)*	4540 *(20190)*
	3.50 *(88.9)*	10780 *(47940)*	10780 *(47940)*	9690 *(43100)*	8010 *(35620)*	7440 *(33090)*	6540 *(29080)*	6160 *(27390)*	5590 *(24860)*	4890 *(21750)*	4370 *(19430)*
	4.00 *(102)*	9740 *(43320)*	9590 *(42650)*	9360 *(41630)*	7740 *(34420)*	7160 *(31840)*	6310 *(28060)*	5960 *(26510)*	5390 *(23970)*	4720 *(20990)*	4220 *(18770)*
	4.50 *(114)*	8860 *(39400)*	8610 *(38290)*	8610 *(38290)*	7490 *(33310)*	6940 *(30860)*	6090 *(27080)*	5760 *(25620)*	5210 *(23170)*	4570 *(20320)*	4090 *(18190)*
	5.00 *(127)*	6840 *(30420)*	7190 *(31980)*	7190 *(31980)*	7010 *(31180)*	6490 *(28860)*	5710 *(25390)*	5390 *(23970)*	4890 *(21750)*	4290 *(19080)*	3820 *(16990)*
	6.00 *(152)*	6040 *(26860)*	6160 *(27390)*	6160 *(27390)*	6160 *(27390)*	6110 *(27170)*	5360 *(23840)*	5090 *(22640)*	4590 *(20410)*	4040 *(17960)*	3590 *(15960)*

Sold & Serviced By:
ELECTROMATE
Toll Free Phone (877) SERVO98
www.electromate.com
sales@electromate.com

Note [1]: For output speeds that are in bewteen those detailed in Tables 4.6a through 4.7c, the overhung load capacity may be calculated through interpolation.

Table 4.6c Allowable Overhung Load for Output Shaft (Solid Output Shaft) (Cf, Sf = 1)

Force Units: lbs, (*N*)

Model	L inch *(mm)*	Output Shaft, RPM									
		5	10	20	30	35	45	50	60	75	90
	0.75 *(19.1)*	21850 *(97180)*	23970 *(106610)*	17730 *(78860)*	14630 *(65070)*	13530 *(60180)*	11880 *(52840)*	11210 *(49860)*	10110 *(44960)*	8860 *(39400)*	7890 *(35090)*
	1.00 *(25.4)*	23060 *(102570)*	23550 *(104750)*	17400 *(77390)*	14360 *(63870)*	13280 *(59060)*	11660 *(51860)*	11010 *(48970)*	9940 *(44210)*	8690 *(38650)*	7740 *(34420)*
	1.25 *(31.8)*	23590 *(104920)*	23100 *(102740)*	17080 *(75970)*	14080 *(62620)*	13030 *(57950)*	11430 *(50840)*	10810 *(48080)*	9740 *(43320)*	8540 *(37980)*	7590 *(33760)*
	1.50 *(38.1)*	23940 *(106480)*	22700 *(100960)*	16780 *(74630)*	13830 *(61510)*	12810 *(56970)*	11230 *(49950)*	10610 *(47190)*	9560 *(42520)*	8390 *(37310)*	7460 *(33180)*
	1.75 *(44.5)*	24070 *(107060)*	22300 *(99190)*	16480 *(73300)*	13580 *(60400)*	12580 *(55950)*	11030 *(49060)*	10410 *(46300)*	9410 *(41850)*	8240 *(36650)*	7340 *(32640)*
	1.88 *(47.6)*	22610 *(100560)*	21900 *(97410)*	16180 *(71960)*	13360 *(59420)*	12360 *(54970)*	10830 *(48170)*	10230 *(45500)*	9240 *(41090)*	8090 *(35980)*	7210 *(32070)*
4D160 4D165	2.00 *(50.8)*	21420 *(95270)*	21520 *(95720)*	15900 *(70720)*	13130 *(58400)*	12160 *(54080)*	10660 *(47410)*	10060 *(44740)*	9090 *(40430)*	7960 *(35400)*	7090 *(31530)*
4D170 4D175	2.50 *(63.5)*	20310 *(90330)*	20820 *(92600)*	15380 *(68410)*	12680 *(56400)*	11760 *(52300)*	10310 *(45850)*	9740 *(43320)*	8790 *(39090)*	7690 *(34200)*	6840 *(30420)*
4D180 4D185	3.00 *(76.2)*	17910 *(79660)*	18280 *(81300)*	14910 *(66310)*	12280 *(54620)*	11380 *(50610)*	9990 *(44430)*	9440 *(41980)*	8510 *(37850)*	7440 *(33090)*	6640 *(29530)*
	3.50 *(88.9)*	16000 *(71160)*	16000 *(71160)*	14430 *(64180)*	11910 *(52970)*	11030 *(49060)*	9660 *(42960)*	9140 *(40650)*	8240 *(36650)*	7210 *(32070)*	6410 *(28510)*
	4.00 *(102)*	14440 *(64220)*	14210 *(63200)*	14010 *(62310)*	11560 *(51410)*	10680 *(47500)*	9390 *(41760)*	8860 *(39400)*	7990 *(35530)*	6990 *(31090)*	6240 *(27750)*
	4.50 *(114)*	13180 *(58620)*	12810 *(56970)*	12810 *(56970)*	11210 *(49860)*	10380 *(46170)*	9110 *(40520)*	8610 *(38290)*	7760 *(34510)*	6790 *(30200)*	6040 *(26860)*
	5.00 *(127)*	10150 *(45140)*	10660 *(47410)*	10660 *(47410)*	10610 *(47190)*	9810 *(43630)*	8610 *(38290)*	8140 *(36200)*	7340 *(32640)*	6410 *(28510)*	5710 *(25390)*
	6.00 *(152)*	8950 *(39800)*	9140 *(40650)*	9140 *(40650)*	9140 *(40650)*	9140 *(40650)*	8160 *(36290)*	7710 *(34290)*	6960 *(30950)*	6090 *(27080)*	5410 *(24060)*
	7.00 *(178)*	7990 *(35530)*	7990 *(35530)*	7990 *(35530)*	7990 *(35530)*	7990 *(35530)*	7760 *(34510)*	7310 *(32510)*	6610 *(29400)*	5790 *(25750)*	5140 *(22860)*

Sold & Serviced By:
ELECTROMATE
Toll Free Phone (877) SERVO98
www.electromate.com
sales@electromate.com

Note [1]: For output speeds that are in bewteen those detailed in Tables 4.6a through 4.7c, the overhung load capacity may be calculated through interpolation.

Table 4.6d Allowable Overhung Load for Output Shaft (Solid Output Shaft) (Cf, Sf = 1)

Force Units: lbs, (*N*)

Model	L inch *(mm)*	Output Shaft, RPM									
		5	10	20	30	35	45	50	60	75	90
	0.75 *(19.1)*	22060 *(98120)*	25720 *(114400)*	24970 *(111060)*	20970 *(93270)*	19550 *(86950)*	17350 *(77170)*	16480 *(73300)*	15030 *(66850)*	13380 *(59510)*	12110 *(53860)*
	1.00 *(25.4)*	23290 *(103590)*	25470 *(113290)*	24620 *(109500)*	20600 *(91620)*	19200 *(85400)*	17050 *(75830)*	16200 *(72050)*	14780 *(65740)*	13160 *(58530)*	11880 *(52840)*
	1.25 *(31.8)*	23780 *(105770)*	24970 *(111060)*	24200 *(107640)*	20250 *(90070)*	18880 *(83970)*	16780 *(74630)*	15930 *(70850)*	14530 *(64620)*	12930 *(57510)*	11680 *(51950)*
	1.50 *(38.1)*	24210 *(107680)*	24700 *(109860)*	23800 *(105860)*	19930 *(88640)*	18580 *(82640)*	16480 *(73300)*	15650 *(69610)*	14280 *(63510)*	12710 *(56530)*	11510 *(51190)*
	1.75 *(44.5)*	24370 *(108390)*	24370 *(108390)*	23420 *(104170)*	19600 *(87180)*	18280 *(81300)*	16230 *(72190)*	15400 *(68490)*	14060 *(62530)*	12510 *(55640)*	11310 *(50300)*
	1.88 *(47.6)*	22920 *(101940)*	24070 *(107060)*	23050 *(102520)*	19280 *(85750)*	17980 *(79970)*	15950 *(70940)*	15150 *(67380)*	13830 *(61510)*	12310 *(54750)*	11130 *(49500)*
4E170	2.00 *(50.8)*	21720 *(96610)*	23750 *(105640)*	22670 *(100830)*	18980 *(84420)*	17700 *(78720)*	15700 *(69830)*	14930 *(66400)*	13610 *(60530)*	12110 *(53860)*	10960 *(48750)*
4E175											
4E180	2.50 *(63.5)*	22070 *(98160)*	23170 *(103060)*	22000 *(97850)*	18400 *(81840)*	17150 *(76280)*	15230 *(67740)*	14460 *(64310)*	13210 *(58750)*	11730 *(52170)*	10630 *(47280)*
4E185											
4E190	3.00 *(76.2)*	22150 *(98520)*	22600 *(100520)*	21350 *(94960)*	17850 *(79390)*	16650 *(74050)*	14780 *(65740)*	14030 *(62400)*	12810 *(56970)*	11380 *(50610)*	10310 *(45850)*
4E195											
	3.50 *(88.9)*	22070 *(98160)*	22070 *(98160)*	20720 *(92160)*	17350 *(77170)*	16150 *(71830)*	14360 *(63870)*	13630 *(60620)*	12430 *(55280)*	11060 *(49190)*	10010 *(44520)*
	4.00 *(102)*	21900 *(97410)*	21550 *(95850)*	20150 *(89620)*	16850 *(74940)*	15700 *(69830)*	13960 *(62090)*	13260 *(58980)*	12080 *(53730)*	10760 *(47860)*	9740 *(43320)*
	4.50 *(114)*	21680 *(96430)*	21070 *(93710)*	19600 *(87180)*	16400 *(72940)*	15280 *(67960*	13580 *(60400*	12880 *(57290)*	11760 *(52300)*	10460 *(46520)*	9460 *(42070)*
	5.00 *(127)*	17810 *(79210)*	18700 *(83170)*	18580 *(82640)*	15550 *(69160)*	14510 *(64540)*	12880 *(57290)*	12230 *(54390)*	11160 *(49630)*	9940 *(44210)*	8990 *(39980)*
	6.00 *(152)*	15710 *(69870)*	16030 *(71300)*	16030 *(71300)*	14780 *(65740)*	13780 *(61290)*	12230 *(54390)*	11630 *(51730)*	10610 *(47190)*	9440 *(41980)*	8540 *(37980)*
	7.00 *(178)*	14030 *(62400)*	14030 *(62400)*	14030 *(62400)*	14030 *(62400)*	13130 *(58400)*	11660 *(51860)*	11080 *(49280)*	10110 *(44960)*	8990 *(39980)*	8140 *(36200)*
	0.75 *(19.1)*	28700 *(127650)*	33460 *(148830)*	33460 *(148830)*	33460 *(148830)*	33210 *(147710)*	29720 *(132190)*	28470 *(126630)*	25970 *(115510)*	23320 *(103720)*	21270 *(94600)*
	1.00 *(25.4)*	30370 *(135080)*	33210 *(147710)*	33210 *(147710)*	33210 *(147710)*	32710 *(145490)*	29220 *(129970)*	27970 *(124410)*	25720 *(114400)*	23000 *(102300)*	20950 *(93180)*
	1.25 *(31.8)*	31150 *(138550)*	32710 *(145490)*	32710 *(145490)*	32710 *(145490)*	32460 *(144380)*	28970 *(128850)*	27470 *(122180)*	25220 *(112170)*	22650 *(100740)*	20650 *(91850)*
	1.50 *(38.1)*	31820 *(141530)*	32460 *(144380)*	32460 *(144380)*	32460 *(144380)*	31960 *(142150)*	28470 *(126630)*	27220 *(121070)*	24920 *(110840)*	22350 *(99410)*	20350 *(90510)*
	1.75 *(44.5)*	31960 *(142150)*	31960 *(142150)*	31960 *(142150)*	31960 *(142150)*	31460 *(139930)*	28220 *(125520)*	26720 *(118850)*	24570 *(109280)*	22020 *(97940)*	20080 *(89310)*
	1.88 *(47.6)*	30200 *(134320)*	31710 *(141040)*	31710 *(141040)*	31710 *(141040)*	30960 *(137710)*	27720 *(123290)*	26470 *(117730)*	24220 *(107730)*	21720 *(96610)*	19800 *(88070)*
	2.00 *(50.8)*	28770 *(127960)*	31460 *(139930)*	31460 *(139930)*	31460 *(139930)*	30460 *(135480)*	27220 *(121070)*	25970 *(115510)*	23900 *(106300)*	21420 *(95270)*	19530 *(86860)*
4F180											
4F185	2.50 *(63.5)*	29250 *(130100)*	30710 *(136590)*	30710 *(136590)*	30710 *(136590)*	29720 *(132190)*	26720 *(118850)*	25470 *(113290)*	23270 *(103500)*	20870 *(92820)*	19030 *(84640)*
4F190											
4F195	3.00 *(76.2)*	29620 *(131740)*	30220 *(134410)*	30220 *(134410)*	30220 *(134410)*	28970 *(128850)*	25970 *(115510)*	24700 *(109860)*	22670 *(100830)*	20320 *(90380)*	18530 *(82420)*
	3.50 *(88.9)*	29470 *(131080)*	29470 *(131080)*	29470 *(131080)*	29470 *(131080)*	28220 *(125520)*	25220 *(112170)*	24070 *(107060)*	22100 *(98300)*	19830 *(88200)*	18050 *(80280)*
	4.00 *(102)*	29440 *(130940)*	28970 *(128850)*	28970 *(128850)*	28970 *(128850)*	27720 *(123290)*	24650 *(109640)*	23500 *(104520)*	21550 *(95850)*	19330 *(85970)*	17630 *(78410)*
	4.50 *(114)*	29800 *(132550)*	28970 *(128850)*	28970 *(128850)*	28720 *(127740)*	26970 *(119960)*	24070 *(107060)*	22920 *(101940)*	21050 *(93630)*	18880 *(83970)*	17200 *(76500)*
	5.00 *(127)*	27110 *(120580)*	28470 *(126630)*	28470 *(126630)*	27470 *(122180)*	25720 *(114400)*	22970 *(102170)*	21870 *(97270)*	20080 *(89310)*	18000 *(80060)*	16400 *(72940)*
	6.00 *(152)*	25700 *(114310)*	26220 *(116620)*	26220 *(116620)*	26220 *(116620)*	24600 *(109420)*	21970 *(97720)*	20920 *(93050)*	19200 *(85400)*	17230 *(76630)*	15700 *(69830)*
	7.00 *(178)*	23900 *(106300)*	23900 *(106300)*	23900 *(106300)*	23900 *(106300)*	23550 *(104750)*	21050 *(93630)*	20050 *(89180)*	18400 *(81840)*	16500 *(73390)*	15030 *(66850)*

Note [1]: For output speeds that are in bewteen those detailed in Tables 4.6a through 4.7c, the overhung load capacity may be calculated through interpolation.

Table 4.7a Allowable Overhung Load for Output Shaft (Keyed Hollow Bore, Shrink Disc, Taper Grip Bushing) (Cf, Sf = 1)

Force Units: lbs, (*N*)

Model	L inch *(mm)*	Output Shaft, RPM									
		5	10	20	30	35	45	50	60	75	90
4A100 4A105 4A110 4A115 4A120 4A125 4A140 4A145	0.75 *(19.1)*	7170 *(31890)*	8360 *(37180)*	7510 *(33400)*	6440 *(28640)*	6060 *(26950)*	5490 *(24410)*	5260 *(23390)*	4870 *(21660)*	4440 *(19740)*	4120 *(18320)*
	1.00 *(25.4)*	7490 *(33310)*	8190 *(36420)*	7290 *(32420)*	6240 *(27750)*	5890 *(26190)*	5310 *(23610)*	5090 *(22640)*	4740 *(21080)*	4320 *(19210)*	3990 *(17740)*
	1.25 *(31.8)*	7610 *(33840)*	7990 *(35530)*	7060 *(31400)*	6060 *(26950)*	5710 *(25390)*	5160 *(22950)*	4940 *(21970)*	4590 *(20410)*	4190 *(18630)*	3870 *(17210)*
	1.50 *(38.1)*	7680 *(34160)*	7840 *(34870)*	6860 *(30510)*	5890 *(26190)*	5540 *(24640)*	5020 *(22320)*	4820 *(21430)*	4470 *(19880)*	4070 *(18100)*	3770 *(16760)*
	1.75 *(44.5)*	7660 *(34070)*	7660 *(34070)*	6690 *(29750)*	5740 *(25530)*	5390 *(23970)*	4890 *(21750)*	4690 *(20860)*	4340 *(19300)*	3970 *(17650)*	3670 *(16320)*
	1.88 *(47.6)*	7150 *(31800)*	7510 *(33400)*	6510 *(28950)*	5590 *(24860)*	5260 *(23390)*	4770 *(21210)*	4570 *(20320)*	4240 *(18850)*	3870 *(17210)*	3570 *(15870)*
	2.00 *(50.8)*	6730 *(29930)*	7360 *(32730)*	6340 *(28200)*	5440 *(24190)*	5110 *(22720)*	4640 *(20630)*	4440 *(19740)*	4120 *(18320)*	3770 *(16760)*	3470 *(15430)*
	2.50 *(63.5)*	6730 *(29930)*	7060 *(31400)*	6040 *(26860)*	5160 *(22950)*	4870 *(21660)*	4420 *(19660)*	4220 *(18770)*	3920 *(17430)*	3570 *(15870)*	3290 *(14630)*
	3.00 *(76.2)*	6680 *(29710)*	6810 *(30290)*	5760 *(25620)*	4940 *(21970)*	4640 *(20630)*	4220 *(18770)*	4040 *(17960)*	3740 *(16630)*	3420 *(15210)*	3140 *(13960)*
	3.50 *(88.9)*	6560 *(29170)*	6560 *(29170)*	5490 *(24410)*	4720 *(20990)*	4440 *(19740)*	4020 *(17880)*	3840 *(17080)*	3570 *(15870)*	3240 *(14410)*	3020 *(13430)*
	4.00 *(102)*	6390 *(28420)*	6290 *(27970)*	5260 *(23390)*	4520 *(20100)*	4240 *(18850)*	3840 *(17080)*	3690 *(16410)*	3420 *(15210)*	3120 *(13870)*	2890 *(12850)*
4B120 4B125 4B140 4B145 4B160 4B165	0.75 *(19.1)*	11800 *(52480)*	13010 *(57860)*	10010 *(44520)*	8510 *(37850)*	7990 *(35530)*	7190 *(31980)*	6890 *(30640)*	6360 *(28280)*	5740 *(25530)*	5290 *(23520)*
	1.00 *(25.4)*	12350 *(54930)*	12680 *(56400)*	9760 *(43410)*	8310 *(36960)*	7790 *(34640)*	7010 *(31180)*	6710 *(29840)*	6190 *(27530)*	5610 *(24950)*	5160 *(22950)*
	1.25 *(31.8)*	12410 *(55190)*	12380 *(55060)*	9540 *(42430)*	8110 *(36070)*	7610 *(33840)*	6860 *(30510)*	6560 *(29170)*	6060 *(26950)*	5490 *(24410)*	5040 *(22410)*
	1.50 *(38.1)*	12210 *(54310)*	12110 *(53860)*	9310 *(41410)*	7910 *(35180)*	7440 *(33090)*	6690 *(29750)*	6410 *(28510)*	5910 *(26280)*	5340 *(23750)*	4920 *(21880)*
	1.75 *(44.5)*	11910 *(52970)*	11830 *(52610)*	9110 *(40520)*	7740 *(34420)*	7260 *(32290)*	6540 *(29080)*	6260 *(27840)*	5790 *(25750)*	5240 *(23300)*	4820 *(21430)*
	1.88 *(47.6)*	10890 *(48430)*	11430 *(50840)*	8910 *(39630)*	7590 *(33760)*	7110 *(31620)*	6410 *(28510)*	6110 *(27170)*	5660 *(25170)*	5110 *(22720)*	4690 *(20860)*
	2.00 *(50.8)*	10040 *(44650)*	10980 *(48830)*	8710 *(38740)*	7410 *(32950)*	6960 *(30950)*	6260 *(27840)*	5990 *(26640)*	5540 *(24640)*	5020 *(22320)*	4590 *(20410)*
	2.50 *(63.5)*	9680 *(43050)*	10160 *(45190)*	8340 *(37090)*	7110 *(31620)*	6660 *(29620)*	6010 *(26730)*	5740 *(25530)*	5310 *(23610)*	4790 *(21300)*	4420 *(19660)*
	3.00 *(76.2)*	9300 *(41360)*	9490 *(42210)*	8010 *(35620)*	6810 *(30290)*	6410 *(28510)*	5760 *(25620)*	5510 *(24500)*	5090 *(22640)*	4620 *(20540)*	4240 *(18850)*
	3.50 *(88.9)*	8860 *(39400)*	8860 *(39400)*	7710 *(34290)*	6560 *(29170)*	6160 *(27390)*	5540 *(24640)*	5310 *(23610)*	4890 *(21750)*	4440 *(19740)*	4070 *(18100)*
	4.00 *(102)*	8470 *(37670)*	8340 *(37090)*	7440 *(33090)*	6310 *(28060)*	5940 *(26420)*	5340 *(23750)*	5110 *(22720)*	4720 *(20990)*	4270 *(18990)*	3920 *(17430)*
	4.50 *(114)*	8090 *(35980)*	7860 *(34960)*	7160 *(31840)*	6090 *(27080)*	5740 *(25530)*	5160 *(22950)*	4940 *(21970)*	4540 *(20190)*	4120 *(18320)*	3790 *(16850)*
	5.00 *(127)*	6730 *(29930)*	7060 *(31400)*	6690 *(29750)*	5690 *(25300)*	5340 *(23750)*	4820 *(21430)*	4590 *(20410)*	4240 *(18850)*	3840 *(17080)*	3540 *(15740)*

Sold & Serviced By:
ELECTROMATE
Toll Free Phone (877) SERVO98
www.electromate.com
sales@electromate.com

Note [1]: For output speeds that are in bewteen those detailed in Tables 4.6a through 4.7c, the overhung load capacity may be calculated through interpolation.

Table 4.7b Allowable Overhung Load for Output Shaft (Keyed Hollow Bore, Shrink Disc, Taper Grip Bushing) (Cf, Sf = 1)

Force Units: lbs, (*N*)

Model	L inch *(mm)*	Output Shaft, RPM									
		5	10	20	30	35	45	50	60	75	90
	0.75 *(19.1)*	16770 *(74590)*	17480 *(77750)*	13160 *(58530)*	11030 *(49060)*	10280 *(45720)*	9140 *(40650)*	8690 *(38650)*	7940 *(35310)*	7060 *(31400)*	6390 *(28420)*
	1.00 *(25.4)*	17560 *(78100)*	17080 *(75970)*	12880 *(57290)*	10780 *(47940)*	10060 *(44740)*	8940 *(39760)*	8490 *(37760)*	7760 *(34510)*	6910 *(30730)*	6260 *(27840)*
	1.25 *(31.8)*	17980 *(79970)*	16730 *(74410)*	12610 *(56080)*	10560 *(46970)*	9840 *(43760)*	8740 *(38870)*	8310 *(36960)*	7590 *(33760)*	6760 *(30060)*	6110 *(27170)*
	1.50 *(38.1)*	18210 *(80990)*	16350 *(72720)*	12330 *(54840)*	10330 *(45940)*	9640 *(42870)*	8560 *(38070)*	8140 *(36200)*	7440 *(33090)*	6610 *(29400)*	5990 *(26640)*
	1.75 *(44.5)*	18280 *(81300)*	16030 *(71300)*	12080 *(53730)*	10110 *(44960)*	9440 *(41980)*	8390 *(37310)*	7960 *(35400)*	7260 *(32290)*	6490 *(28860)*	5860 *(26060)*
4C140	1.88 *(47.6)*	17120 *(76140)*	15700 *(69830)*	11830 *(52610)*	9910 *(44070)*	9240 *(41090)*	8210 *(36510)*	7810 *(34730)*	7110 *(31620)*	6340 *(28200)*	5740 *(25530)*
4C145 **4C160**	2.00 *(50.8)*	16170 *(71920)*	15380 *(68410)*	11580 *(51500)*	9710 *(43190)*	9060 *(40290)*	8040 *(35760)*	7640 *(33980)*	6990 *(31090)*	6210 *(27620)*	5640 *(25080)*
4C165 **4C170**	2.50 *(63.5)*	16260 *(72320)*	14780 *(65740)*	11130 *(49500)*	9340 *(41540)*	8710 *(38740)*	7740 *(34420)*	7360 *(32730)*	6710 *(29840)*	5990 *(26640)*	5410 *(24060)*
4C175	3.00 *(76.2)*	15640 *(69560)*	14260 *(63420)*	10730 *(47720)*	8990 *(39980)*	8390 *(37310)*	7460 *(33180)*	7090 *(31530)*	6460 *(28730)*	5760 *(25620)*	5210 *(23170)*
	3.50 *(88.9)*	14980 *(66630)*	13730 *(61070)*	10360 *(46080)*	8660 *(38510)*	8090 *(35980)*	7190 *(31980)*	6840 *(30420)*	6240 *(27750)*	5560 *(24730)*	5040 *(22410)*
	4.00 *(102)*	14360 *(63870)*	13260 *(58980)*	9990 *(44430)*	8360 *(37180)*	7810 *(34730)*	6940 *(30860)*	6590 *(29310)*	6010 *(26730)*	5360 *(23840)*	4870 *(21660)*
	4.50 *(114)*	13740 *(61110)*	12830 *(57060)*	9660 *(42960)*	8090 *(35980)*	7540 *(33530)*	6710 *(29840)*	6360 *(28280)*	5810 *(25840)*	5190 *(23080)*	4690 *(20860)*
	5.00 *(127)*	11480 *(51060)*	12030 *(53500)*	9060 *(40290)*	7590 *(33760)*	7060 *(31400)*	6290 *(27970)*	5960 *(26510)*	5460 *(24280)*	4870 *(21660)*	4390 *(19520)*
	6.00 *(152)*	10770 *(47900)*	10980 *(48830)*	8540 *(37980)*	7140 *(31750)*	6660 *(29620)*	5910 *(26280)*	5610 *(24950)*	5140 *(22860)*	4570 *(20320)*	4140 *(18410)*
	0.75 *(19.1)*	21850 *(97180)*	25470 *(113290)*	19150 *(85170)*	16050 *(71390)*	14960 *(66540)*	13310 *(59200)*	12630 *(56170)*	11560 *(51410)*	10280 *(45720)*	9310 *(41410)*
	1.00 *(25.4)*	23060 *(102570)*	24950 *(110970)*	18800 *(83620)*	15750 *(70050)*	14680 *(65290)*	13060 *(58090)*	12410 *(55190)*	11330 *(50390)*	10090 *(44880)*	9140 *(40650)*
	1.25 *(31.8)*	23590 *(104920)*	24500 *(108970)*	18450 *(82060)*	15450 *(68720)*	14430 *(64180)*	12810 *(56970)*	12180 *(54170)*	11130 *(49500)*	9910 *(44070)*	8990 *(39980)*
	1.50 *(38.1)*	23940 *(106480)*	24050 *(106970)*	18130 *(80640)*	15180 *(67520)*	14160 *(62980)*	12580 *(55950)*	11960 *(53190)*	10930 *(48610)*	9740 *(43320)*	8810 *(39180)*
	1.75 *(44.5)*	24070 *(107060)*	23620 *(105060)*	17800 *(79170)*	14930 *(66400)*	13910 *(61870)*	12360 *(54970)*	11760 *(52300)*	10730 *(47720)*	9560 *(42520)*	8660 *(38510)*
	1.88 *(47.6)*	22610 *(100560)*	23220 *(103280)*	17500 *(77840)*	14660 *(65200)*	13680 *(60840)*	12160 *(54080)*	11560 *(51410)*	10560 *(46970)*	9390 *(41760)*	8510 *(37850)*
4D160	2.00 *(50.8)*	21420 *(95270)*	22820 *(101500)*	17200 *(76500)*	14410 *(64090)*	13430 *(59730)*	11960 *(53190)*	11360 *(50520)*	10360 *(46080)*	9240 *(41090)*	8360 *(37180)*
4D165											
4D170	2.50 *(63.5)*	21710 *(96560)*	22070 *(98160)*	16630 *(73970)*	13930 *(61960)*	13010 *(57860)*	11560 *(51410)*	10980 *(48830)*	10040 *(44650)*	8940 *(39760)*	8090 *(35980)*
4D175											
4D180	3.00 *(76.2)*	21760 *(96780)*	21370 *(95050)*	16100 *(71610)*	13510 *(60090)*	12580 *(55950)*	11180 *(49720)*	10630 *(47280)*	9710 *(43190)*	8640 *(38430)*	7840 *(34870)*
4D185											
	3.50 *(88.9)*	21650 *(96290)*	20700 *(92070)*	15600 *(69380)*	13080 *(58170)*	12180 *(54170)*	10830 *(48170)*	10310 *(45850)*	9410 *(41850)*	8390 *(37310)*	7590 *(33760)*
	4.00 *(102)*	21470 *(95490)*	20080 *(89310)*	15130 *(67290)*	12680 *(56400)*	11830 *(52610)*	10510 *(46740)*	9990 *(44430)*	9140 *(40650)*	8140 *(36200)*	7360 *(32730)*
	4.50 *(114)*	20940 *(93140)*	19500 *(86730)*	14710 *(65430)*	12310 *(54750)*	11480 *(51060)*	10210 *(45410)*	9710 *(43190)*	8860 *(39400)*	7890 *(35090)*	7140 *(31750)*
	5.00 *(127)*	17570 *(78150)*	18430 *(81970)*	13880 *(61730)*	11630 *(51730)*	10860 *(48300)*	9640 *(42870)*	9160 *(40740)*	8390 *(37310)*	7460 *(33180)*	6760 *(30060)*
	6.00 *(152)*	16540 *(73560)*	16880 *(75080)*	13160 *(58530)*	11030 *(49060)*	10280 *(45720)*	9140 *(40650)*	8690 *(38650)*	7940 *(35310)*	7060 *(31400)*	6410 *(28510)*
	7.00 *(178)*	15550 *(69160)*	15550 *(69160)*	12510 *(55640)*	10480 *(46610)*	9790 *(43540)*	8690 *(38650)*	8260 *(36740)*	7540 *(33530)*	6710 *(29840)*	6090 *(27080)*

Note [1]: For output speeds that are in bewteen those detailed in Tables 4.6a through 4.7c, the overhung load capacity may be calculated through interpolation.

Table 4.7c Allowable Overhung Load for Output Shaft (Keyed Hollow Bore, Shrink Disc, Taper Grip Bushing) (Cf, Sf = 1)

Force Units: lbs, (*N*)

Model	L inch *(mm)*	Output Shaft, RPM									
		5	10	20	30	35	45	50	60	75	90
	0.75 *(19.1)*	22060 *(98120)*	25720 *(114400)*	25720 *(114400)*	21700 *(96520)*	20270 *(90160)*	18100 *(80500)*	17230 *(76630)*	15780 *(70180)*	14130 *(62850)*	12830 *(57060)*
	1.00 *(25.4)*	23290 *(103590)*	25470 *(113290)*	25470 *(113290)*	21350 *(94960)*	19930 *(88640)*	17780 *(79080)*	16930 *(75300)*	15500 *(68940)*	13880 *(61730)*	12630 *(56170)*
	1.25 *(31.8)*	23780 *(105770)*	24970 *(111060)*	24920 *(110840)*	20970 *(93270)*	19600 *(87180)*	17480 *(77750)*	16650 *(74050)*	15250 *(67830)*	13660 *(60750)*	12410 *(55190)*
	1.50 *(38.1)*	24210 *(107680)*	24700 *(109860)*	24520 *(109060)*	20620 *(91710)*	19280 *(85750)*	17200 *(76500)*	16380 *(72850)*	15010 *(66760)*	13430 *(59730)*	12210 *(54310)*
	1.75 *(44.5)*	24370 *(108390)*	24370 *(108390)*	24120 *(107280)*	20300 *(90290)*	18950 *(84280)*	16900 *(75170)*	16100 *(71610)*	14760 *(65650)*	13210 *(58750)*	12010 *(53420)*
	1.88 *(47.6)*	22920 *(101940)*	24070 *(107060)*	23720 *(105500)*	19980 *(88870)*	18650 *(82950)*	16650 *(74050)*	15850 *(70500)*	14510 *(64540)*	12980 *(57730)*	11810 *(52530)*
4E170 **4E175**	2.00 *(50.8)*	21720 *(96610)*	23750 *(105640)*	23350 *(103860)*	19650 *(87400)*	18380 *(81750)*	16380 *(72850)*	15600 *(69380)*	14280 *(63510)*	12780 *(56840)*	11630 *(51730)*
4E180 **4E185**	2.50 *(63.5)*	22070 *(98160)*	23170 *(103060)*	22650 *(100740)*	19050 *(84730)*	17800 *(79170)*	15880 *(70630)*	15130 *(67290)*	13860 *(61640)*	12410 *(55190)*	11280 *(50170)*
4E190 **4E195**	3.00 *(76.2)*	22150 *(98520)*	22600 *(100520)*	21970 *(97720)*	18500 *(82280)*	17280 *(76860)*	15400 *(68490)*	14680 *(65290)*	13430 *(59730)*	12030 *(53500)*	10930 *(48610)*
	3.50 *(88.9)*	22070 *(98160)*	22070 *(98160)*	21350 *(94960)*	17950 *(79840)*	16780 *(74630)*	14960 *(66540)*	14260 *(63420)*	13060 *(58090)*	11680 *(51950)*	10630 *(47280)*
	4.00 *(102)*	21900 *(97410)*	21550 *(95850)*	20750 *(92290)*	17450 *(77610)*	16300 *(72500)*	14560 *(64760)*	13860 *(61640)*	12680 *(56400)*	11360 *(50520)*	10330 *(45940)*
	4.50 *(114)*	21680 *(96430)*	21070 *(93710)*	20180 *(89760)*	16980 *(75520)*	15850 *(70500)*	14160 *(62980)*	13480 *(59950)*	12330 *(54840)*	11030 *(49060)*	10040 *(44650)*
	5.00 *(127)*	19190 *(85350)*	20150 *(89620)*	19130 *(85090)*	16100 *(71610)*	15060 *(66980)*	13430 *(59730)*	12780 *(56840)*	11710 *(52080)*	10480 *(46610)*	9540 *(42430)*
	6.00 *(152)*	18940 *(84240)*	19330 *(85970)*	18200 *(80950)*	15300 *(68050)*	14310 *(63650)*	12760 *(56750)*	12160 *(54080)*	11130 *(49500)*	9960 *(44300)*	9060 *(40290)*
	7.00 *(178)*	18550 *(82510)*	18550 *(82510)*	17350 *(77170)*	14610 *(64980)*	13630 *(60620)*	12160 *(54080)*	11580 *(51500)*	10610 *(47190)*	9490 *(42210)*	8640 *(38430)*
	0.75 *(19.1)*	28700 *(127650)*	33460 *(148830)*	33460 *(148830)*	33460 *(148830)*	32960 *(146600)*	29470 *(131080)*	28220 *(125520)*	25720 *(114400)*	23150 *(102970)*	21100 *(93850)*
	1.00 *(25.4)*	30370 *(135080)*	33210 *(147710)*	33210 *(147710)*	33210 *(147710)*	32460 *(144380)*	29220 *(129970)*	27720 *(123290)*	25470 *(113290)*	22820 *(101500)*	20800 *(92510)*
	1.25 *(31.8)*	31150 *(138550)*	32710 *(145490)*	32710 *(145490)*	32710 *(145490)*	32210 *(143270)*	28720 *(127740)*	27220 *(121070)*	24970 *(111060)*	22500 *(100080)*	20500 *(91180)*
	1.50 *(38.1)*	31820 *(141530)*	32460 *(144380)*	32460 *(144380)*	32460 *(144380)*	31710 *(141040)*	28220 *(125520)*	26970 *(119960)*	24750 *(110080)*	22170 *(98610)*	20220 *(89930)*
	1.75 *(44.5)*	31960 *(142150)*	31960 *(142150)*	31960 *(142150)*	31960 *(142150)*	31210 *(138820)*	27970 *(124410)*	26470 *(117730)*	24400 *(108530)*	21870 *(97270)*	19950 *(88730)*
	1.88 (47.6)	30200 (134320)	31710 (141040)	31710 (141040)	31710 (141040)	30710 (136590)	27470 (122180)	26220 (116620)	24070 (107060)	21570 (95940)	19680 (87530)
4F180	2.00 *(50.8)*	28770 *(127960)*	31460 *(139930)*	31460 *(139930)*	31460 *(139930)*	30460 *(135480)*	27220 *(121070)*	25970 *(115510)*	23750 *(105640)*	21270 *(94600)*	19400 *(86290)*
4F185 **4F190**	2.50 *(63.5)*	29250 *(130100)*	30710 *(136590)*	30710 *(136590)*	30710 *(136590)*	29470 *(131080)*	26470 *(117730)*	25220 *(112170)*	23120 *(102830)*	20720 *(92160)*	18900 *(84060)*
4F195	3.00 *(76.2)*	29620 *(131740)*	30220 *(134410)*	30220 *(134410)*	30220 *(134410)*	28720 *(127740)*	25720 *(114400)*	24550 *(109190)*	22520 *(100160)*	20200 *(89840)*	18400 *(81840)*
	3.50 *(88.9)*	29470 *(131080)*	29470 *(131080)*	29470 *(131080)*	29470 *(131080)*	28220 *(125520)*	25220 *(112170)*	23920 *(106390)*	21970 *(97720)*	19700 *(87620)*	17950 *(79840)*
	4.00 *(102)*	29440 *(130940)*	28970 *(128850)*	28970 *(128850)*	28970 *(128850)*	27470 *(122180)*	24500 *(108970)*	23350 *(103860)*	21420 *(95270)*	19230 *(85530)*	17500 *(77840)*
	4.50 *(114)*	29800 *(132550)*	28970 *(128850)*	28970 *(128850)*	28720 *(127740)*	26720 *(118850)*	23920 *(106390)*	22800 *(101410)*	20920 *(93050)*	18750 *(83400)*	17100 *(76060)*
	5.00 *(127)*	27110 *(120580)*	28470 *(126630)*	28470 *(126630)*	27220 *(121070)*	25470 *(113290)*	22850 *(101630)*	21750 *(96740)*	19980 *(88870)*	17900 *(79610)*	16330 *(72630)*
	6.00 *(152)*	25700 *(114310)*	26220 *(116620)*	26220 *(116620)*	26220 *(116620)*	24450 *(108750)*	21850 *(97180)*	20820 *(92600)*	19100 *(84950)*	17130 *(76190)*	15600 *(69380)*
	7.00 *(178)*	25470 *(113290)*	25470 *(113290)*	25470 *(113290)*	24970 *(111060)*	23450 *(104300)*	20950 *(93180)*	19950 *(88730)*	18300 *(81390)*	16430 *(73080)*	14960 *(66540)*

Special Load Guidelines **Output Shaft Allowable Axial Load**

Table 4.8 Allowable Axial Load (Common to Hollow and Solid Shafts)

[Units] Upper line: lbs; lower line: *(N)*

Frame Size	Output Shaft Speed r/min									
	5	10	20	30	35	45	50	60	75	90
4A10 ☐, 4A11 ☐, 4A12 ☐, 4A14 ☐	4968 *(22100)*	4968 *(22100)*	4968 *(22100)*	4586 *(20400)*	4249 *(18900)*	3709 *(16500)*	3507 *(15600)*	3147 *(14000)*	2743 *(12200)*	2428 *(10800)*
4B12 ☐, 4B14 ☐, 4B16 ☐	9329 *(41500)*	8835 *(39300)*	6227 *(27700)*	4923 *(21900)*	4474 *(19900)*	3754 *(16700)*	3462 *(15400)*	2990 *(13300)*	2450 *(10900)*	2025 *(9010)*
4C14 ☐, 4C16 ☐, 4C17 ☐	14567 *(64800)*	10903 *(48500)*	7373 *(32800)*	5620 *(25000)*	4991 *(22200)*	4024 *(17900)*	3642 *(16200)*	2990 *(13300)*	2248 *(10000)*	1675 *(7450)*
4D16 ☐, 4D17 ☐, 4D18 ☐	20816 *(92600)*	14859 *(66100)*	9981 *(44400)*	7531 *(33500)*	6677 *(29700)*	5328 *(23700)*	4811 *(21400)*	3912 *(17400)*	2877 *(12800)*	2070 *(9210)*
4E17 ☐, 4E18 ☐, 4E19 ☐	20974 *(93300)*	20569 *(91500)*	14297 *(63600)*	11150 *(49600)*	10049 *(44700)*	8340 *(37100)*	7666 *(34100)*	6542 *(29100)*	5215 *(23200)*	4204 *(18700)*
4F18 ☐, 4F19 ☐	33720 *(150000)*	33720 *(150000)*	24503 *(109000)*	19670 *(87500)*	17962 *(79900)*	15331 *(68200)*	14297 *(63600)*	12544 *(55800)*	10521 *(46800)*	8947 *(39800)*

*The ☐ mark of each frame size represents 0, 5, DA, DB, or DC.
Above values are valid when no radial load is applied on the shaft, and 12.9 grade mounting bolts are used.

Sold & Serviced By:
ELECTROMATE
Toll Free Phone (877) SERVO98
www.electromate.com
sales@electromate.com

Reducer/Gearmotor Input Shaft Allowable Overhung Load

The radial load acting on the high speed shaft (ie: unit supplied as a reducer) may be calculated with the following formula:

$$Pr \leq \frac{Pro}{Lf \bullet Cf \bullet Sf}$$

LEGEND

Pr	=	Actual radial load (lbs, *N*)
Pro	=	Allowable radial load (lbs, *N*)
Lf	=	Load Location factor (Table 4.6a)
Cf	=	Coupling Factor (Table 4.4)
Sf	=	Service factor (Table 4.5)

Figure 4.1 Input Shaft Load Location Factor (Lf)

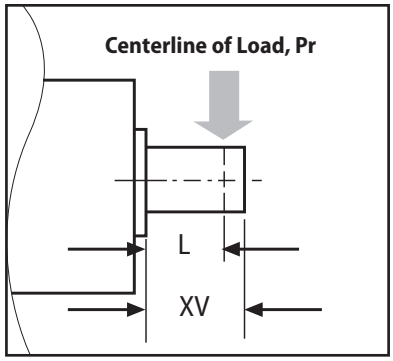

Table 4.9 Input Shaft Load Location Factor (Lf)

Model	L inch/*(mm)*											
	0.25 *(6.35)*	0.50 *(12.7)*	0.75 *(19.05)*	1.00 *(25.4)*	1.25 *(31.75)*	1.50 *(38.1)*	1.75 *(44.45)*	2.00 *(50.8)*	2.50 *(63.5)*	3.00 *(76.2)*	3.50 *(88.9)*	4.00 *(101.6)*
4A10DA, 4A12DA, 4B12DA, 4B14DA, 4C14DA	0.78	1.07	1.52	2.02	—	—	—	—	—	—	—	—
4A12DB, 4B12DB, 4B14DB, 4C14DB, 4C16DA, 4D16DA, 4D17DA, 4E17DA	0.90	1.09	1.52	2.03	2.53	—	—	—	—	—	—	—
4A100, 4A105, 4C14DC, 4D16DB, 4D17DB, 4D18DA, 4E17DB, 4E18DA, 4F18DA	0.93	1.09	1.52	2.03	2.53	—	—	—	—	—	—	—
4A110, 4A115	0.93	1.09	1.52	2.03	2.53	—	—	—	—	—	—	—
4A120, 4A125, 4B120, 4B125, 4D17DC, 4E17DC, 4E19DA, 4F19DA	0.68	0.87	1.10	1.43	1.77	2.12	2.46	—	—	—	—	—
4C145, 4D18DB, 4E18DB, 4E19DB, 4F18DB, 4F19DB	0.70	0.84	0.98	1.25	1.53	1.83	2.11	—	—	—	—	—
4B160, 4B165, 4C160, 4C165, 4D160, 4D165	0.90	0.94	0.97	1.06	1.22	1.36	1.51	1.66	1.94	—	—	—
4C170, 4C175, 4D170, 4D175, 4E170, 4E175	—	0.91	0.95	0.99	1.09	1.23	1.38	1.51	1.79	2.08	—	—
4D180, 4D185, 4E180, 4E185, 4F180, 4F185	—	—	0.92	0.96	1.01	1.11	1.24	1.37	1.63	1.88	2.15	2.40
4E190, 4E195, 4F190, 4F195	—	—	0.92	0.95	0.99	1.06	1.15	1.26	1.47	1.69	1.90	2.12

Sold & Serviced By:
ELECTROMATE
Toll Free Phone (877) SERV098
www.electromate.com
sales@electromate.com

Table 4.10 Input Shaft Overhung Load Capacity Pro (Lf, Cf, Sf =1)

Force Units: lbs, *(N)*

Model	Reduction Ratio	Input Speed (RPM)						
		1750	1450	1165	980	870	720	580
4A10DA, 4A12DA, 4B12DA, 4B14DA, 4C14DA	364 - 5177, 7228, 10658	44 *(196)*	33 *(147)*	33 *(147)*	44 *(196)*	44 *(196)*	44 *(196)*	44 *(196)*
	1849, 2537	11 *(49.1)*	11 *(49.1)*	11 *(49.1)*	11 *(49.1)*	11 *(49.1)*	33 *(147)*	44 *(196)*
4A12DB, 4B12DB, 4B14DB, 4C14DB, 4C16DA, 4D16DA, 4D17DA, 4E17DA	All Ratios	44 *(196)*	44 *(196)*	44 *(196)*	44 *(196)*	55 *(245)*	55 *(245)*	66 *(294)*
4A100, 4A105, 4C14DC, 4D16DB, 4D17DB, 4D18DA, 4E17DB, 4E18DA, 4F18DA	11 - 39 , 54 - 578 , 809, 1117, 1656 , 2272 - 10658	99 *(441)*	99 *(441)*	110 *(491)*	121 *(540)*	132 *(589)*	132 *(589)*	132 *(589)*
	42, 46, 48, 53, 683, 956, 1320, 1957	99 *(441)*	77 *(343)*	99 *(441)*	110 *(491)*	110 *(491)*	121 *(540)*	132 *(589)*
4A110, 4A115	19 - 28 , 67 - 305	99 *(441)*	77 *(343)*	99 *(441)*	110 *(491)*	110 *(491)*	121 *(540)*	132 *(589)*
	35 - 60	44 *(196)*	44 *(196)*	44 *(196)*	44 *(196)*	55 *(245)*	55 *(245)*	66 *(294)*
4A120, 4A125, 4B120, 4B125, 4D17DC, 4E17DC, 4E19DA, 4F19DA	11 - 60 , 364 - 2559 , 3511 , 5177	133 *(590)*	155 *(690)*	166 *(740)*	175 *(780)*	198 *(880)*	198 *(880)*	198 *(880)*
	67 - 305, 2944, 4365, 6472 - 10658	121 *(540)*	99 *(440)*	110 *(490)*	121 *(540)*	133 *(590)*	198 *(880)*	198 *(880)*
4D18DB, 4E18DB, 4E19DB, 4F18DB, 4F19DB	11 - 74	308 *(1370)*	308 *(1370)*	308 *(1370)*	342 *(1520)*	364 *(1620)*	387 *(1720)*	418 *(1860)*
	80 - 305	288 *(1280)*	288 *(1280)*	288 *(1280)*	308 *(1370)*	330 *(1470)*	353 *(1570)*	398 *(1770)*
4A140, 4A145, 4B140, 4B145, 4C140, 4C145	11 - 28	308 *(1370)*	308 *(1370)*	308 *(1370)*	342 *(1520)*	364 *(1620)*	387 *(1720)*	418 *(1860)*
	35 - 74	277 *(1230)*	220 *(980)*	243 *(1080)*	265 *(1180)*	277 *(1230)*	297 *(1320)*	330 *(1470)*
	80 , 88	243 *(1080)*	254 *(1130)*	265 *(1180)*	288 *(1280)*	297 *(1320)*	308 *(1370)*	330 *(1470)*
	93 - 305	121 *(540)*	133 *(590)*	133 *(590)*	155 *(690)*	155 *(690)*	155 *(690)*	243 *(1080)*
4B160, 4B165, 4C160, 4C165, 4D160, 4D165	11 - 88 , 163 - 207	398 *(1770)*	398 *(1770)*	441 *(1960)*	463 *(2060)*	486 *(2160)*	486 *(2160)*	486 *(2160)*
	93 - 151 , 227 - 305	243 *(1080)*	265 *(1180)*	288 *(1280)*	308 *(1370)*	308 *(1370)*	353 *(1570)*	398 *(1770)*
4C170, 4C175, 4D170, 4D175, 4E170, 4E175	All Ratios	463 *(2060)*	463 *(2060)*	508 *(2260)*	508 *(2260)*	528 *(2350)*	551 *(2450)*	596 *(2650)*
4D180, 4D185, 4E180, 4E185, 4F180, 4F185	All Ratios	618 *(2750)*	573 *(2550)*	618 *(2750)*	661 *(2940)*	683 *(3040)*	751 *(3340)*	771 *(3430)*
4E190, 4E195, 4F190, 4F195	35 - 88	683 *(3040)*	683 *(3040)*	728 *(3240)*	794 *(3530)*	816 *(3630)*	881 *(3920)*	881 *(3920)*
	93 - 305	596 *(2650)*	573 *(2550)*	638 *(2840)*	661 *(2940)*	706 *(3140)*	751 *(3340)*	816 *(3630)*

Sold & Serviced By:
ELECTROMATE
Toll Free Phone (877) SERVO98
www.electromate.com
sales@electromate.com

Table 4.11 Reducer Moment of Inertia on Motor Shaft of Gearmotor: Hollow Output Shaft, Ratios 11 - 53[1]
Units: lb•in^2 *(x 10^{-4} kg•m^2)*

Model	Nominal Reduction Ratio												
	11	13	14	16	18	21	22	25	28	35	39	46	53
4A100	1.57	0.978	0.904	0.608	0.586	0.462	—	—	0.302	0.186	0.176	0.162	0.141
4A105	*(4.60)*	*(2.86)*	*(2.64)*	*(1.78)*	*(1.72)*	*(1.35)*	—	—	*(0.884)*	*(0.544)*	*(0.514)*	*(0.475)*	*(0.414)*
4A110	—	—	—	—	—	0.710	—	—	0.491	0.358	0.348	0.304	0.278
4A115	—	—	—	—	—	*(2.08)*	—	—	*(1.44)*	*(1.05)*	*(1.02)*	*(0.891)*	*(0.813)*
4A120	3.86	2.35	2.28	1.70	1.65	1.28	1.44	1.42	0.986	0.608	0.598	0.631	0.589
4A125	*(11.3)*	*(6.89)*	*(6.67)*	*(4.99)*	*(4.84)*	*(3.74)*	*(4.21)*	*(4.14)*	*(2.89)*	*(1.78)*	*(1.75)*	*(1.85)*	*(1.72)*
4A140	8.32	5.30	5.22	3.77	3.72	3.37	3.47	3.45	2.27	1.61	1.60	1.29	1.16
4A145	*(24.4)*	*(15.5)*	*(15.3)*	*(11.0)*	*(10.9)*	*(9.87)*	*(10.2)*	*(10.1)*	*(6.65)*	*(4.71)*	*(4.68)*	*(3.77)*	*(3.40)*
4B120	5.24	3.24	3.05	2.30	1.47	1.62	1.73	1.67	1.18	0.726	0.700	0.704	0.644
4B125	*(15.3)*	*(9.48)*	*(8.93)*	*(6.72)*	*(4.31)*	*(4.75)*	*(5.06)*	*(4.88)*	*(3.45)*	*(2.12)*	*(2.05)*	*(2.06)*	*(1.88)*
4B140	9.69	6.22	6.03	4.37	4.25	3.75	3.79	3.72	2.48	1.74	1.71	1.37	1.22
4B145	*(28.4)*	*(18.2)*	*(17.7)*	*(12.8)*	*(12.4)*	*(11.0)*	*(11.1)*	*(10.9)*	*(7.27)*	*(5.08)*	*(5.01)*	*(4.01)*	*(3.58)*
4B160	27.7	17.8	17.6	12.1	12.0	8.93	10.1	10.0	6.17	4.41	4.39	3.87	3.46
4B165	*(81.0)*	*(52.1)*	*(51.6)*	*(35.5)*	*(35.1)*	*(26.1)*	*(29.5)*	*(29.3)*	*(18.0)*	*(12.9)*	*(12.8)*	*(11.3)*	*(10.1)*
4C140	13.7	9.01	8.40	6.20	3.96	4.84	4.73	4.52	3.10	2.12	2.04	1.60	1.40
4C145	*(40.1)*	*(26.4)*	*(24.6)*	*(18.1)*	*(11.6)*	*(14.2)*	*(13.8)*	*(13.2)*	*(9.06)*	*(6.20)*	*(5.96)*	*(4.69)*	*(4.09)*
4C160	31.9	20.8	20.1	14.0	13.6	10.0	11.0	10.8	6.75	4.78	4.69	4.09	3.63
4C165	*(93.4)*	*(60.8)*	*(59.0)*	*(40.9)*	*(39.7)*	*(29.2)*	*(32.1)*	*(31.6)*	*(19.8)*	*(14.0)*	*(13.7)*	*(12.0)*	*(10.6)*
4C170	55.0	35.0	34.4	26.4	26.0	23.8	23.4	23.1	17.6	13.3	13.2	12.3	10.9
4C175	*(161)*	*(102)*	*(101)*	*(77.2)*	*(76.0)*	*(69.8)*	*(68.3)*	*(67.7)*	*(51.4)*	*(38.9)*	*(38.6)*	*(36.1)*	*(31.9)*
4D160	—	—	—	—	—	12.6	13.3	12.7	8.21	5.73	5.47	4.64	4.04
4D165	—	—	—	—	—	*(36.8)*	*(39.0)*	*(37.1)*	*(24.0)*	*(16.8)*	*(16.0)*	*(13.6)*	*(11.8)*
4D170	68.5	44.1	42.2	32.3	31.1	26.5	25.7	25.1	19.0	14.2	14.0	12.9	11.3
4D175	*(200)*	*(129)*	*(123)*	*(94.5)*	*(90.9)*	*(77.5)*	*(75.3)*	*(73.4)*	*(55.7)*	*(41.7)*	*(40.9)*	*(37.7)*	*(33.1)*
4D180	104	52.8	50.9	36.4	35.1	36.6	31.5	30.9	26.5	21.5	21.2	18.9	16.6
4D185	*(304)*	*(155)*	*(149)*	*(107)*	*(103)*	*(107)*	*(92.2)*	*(90.3)*	*(77.5)*	*(62.8)*	*(62.1)*	*(55.4)*	*(48.7)*
4E170	—	—	—	—	—	30.5	29.0	28.0	21.3	15.6	15.2	13.7	12.0
4E175	—	—	—	—	—	*(89.2)*	*(84.7)*	*(82.0)*	*(62.3)*	*(45.5)*	*(44.4)*	*(40.2)*	*(35.0)*
4E180	120	62.3	59.5	43.0	41.1	40.6	34.7	33.8	28.7	22.8	22.4	19.8	17.3
4E185	*(351)*	*(182)*	*(174)*	*(126)*	*(120)*	*(119)*	*(102)*	*(98.9)*	*(84.0)*	*(66.7)*	*(65.5)*	*(57.8)*	*(50.6)*
4E190	188	102	99.6	70.7	68.8	77.0	64.9	64.0	56.7	48.5	48.1	44.2	41.9
4E195	*(551)*	*(300)*	*(291)*	*(207)*	*(201)*	*(225)*	*(190)*	*(187)*	*(166)*	*(142)*	*(141)*	*(129)*	*(123)*
4F180	178	97.6	92.8	68.4	65.1	52.8	44.4	42.7	35.6	26.7	26.0	22.4	19.2
4F185	*(522)*	*(286)*	*(272)*	*(200)*	*(190)*	*(155)*	*(130)*	*(125)*	*(104)*	*(78.1)*	*(76.2)*	*(65.4)*	*(56.3)*
4F190	234	131	126	91.0	87.7	90.0	75.2	73.6	64.1	52.7	52.0	47.0	44.0
4F195	*(686)*	*(383)*	*(369)*	*(266)*	*(257)*	*(263)*	*(220)*	*(215)*	*(187)*	*(154)*	*(152)*	*(138)*	*(129)*

Note: (1) The inertia tables do not include the inertia of the integral motors. Total unit inertia is obtained by adding the reducer inertia to the motor inertia.

Table 4.12 Reducer Moment of Inertia on Motor Shaft of Gearmotor: Hollow Output Shaft, Ratios 60 - 305[1]
Units: lb•in^2 *(x 10^{-4} kg•m^2)*

Model	Nominal Reduction Ratio												
	60	67	74	80	88	102	112	123	151	179	207	249	305
4A100	0.101	0.107	0.104	0.094	0.092	0.064	0.059	0.058	0.053	0.070	0.047	0.067	0.045
4A105	*(0.297)*	*(0.314)*	*(0.306)*	*(0.275)*	*(0.270)*	*(0.188)*	*(0.172)*	*(0.169)*	*(0.154)*	*(0.206)*	*(0.138)*	*(0.196)*	*(0.131)*
4A110	0.260	0.227	0.225	0.217	0.215	0.207	0.197	0.196	0.191	0.185	0.183	0.181	0.179
4A115	*(0.760)*	*(0.665)*	*(0.657)*	*(0.634)*	*(0.628)*	*(0.605)*	*(0.577)*	*(0.575)*	*(0.559)*	*(0.541)*	*(0.536)*	*(0.529)*	*(0.525)*
4A120	0.441	0.496	0.493	0.455	0.453	0.320	0.303	0.302	0.286	0.396	0.272	0.384	0.261
4A125	*(1.29)*	*(1.45)*	*(1.44)*	*(1.33)*	*(1.33)*	*(0.935)*	*(0.887)*	*(0.884)*	*(0.838)*	*(1.16)*	*(0.795)*	*(1.12)*	*(0.763)*
4A140	1.03	0.876	0.873	0.814	0.812	0.745	0.720	0.719	0.673	0.655	0.654	0.637	0.633
4A145	*(3.01)*	*(2.56)*	*(2.56)*	*(2.38)*	*(2.38)*	*(2.18)*	*(2.11)*	*(2.10)*	*(1.97)*	*(1.92)*	*(1.91)*	*(1.86)*	*(1.85)*
4B120	0.484	0.528	0.521	0.478	0.473	0.334	0.315	0.312	0.293	0.401	0.275	0.387	0.262
4B125	*(1.42)*	*(1.54)*	*(1.52)*	*(1.40)*	*(1.38)*	*(0.978)*	*(0.921)*	*(0.913)*	*(0.857)*	*(1.17)*	*(0.805)*	*(1.13)*	*(0.768)*
4B140	1.07	0.911	0.904	0.838	0.833	0.761	0.732	0.730	0.680	0.660	0.658	0.639	0.635
4B145	*(3.14)*	*(2.67)*	*(2.65)*	*(2.45)*	*(2.44)*	*(2.23)*	*(2.14)*	*(2.14)*	*(1.99)*	*(1.93)*	*(1.93)*	*(1.87)*	*(1.86)*
4B160	2.92	2.66	2.65	2.48	2.47	2.19	2.10	2.10	2.01	1.97	1.98	1.89	1.86
4B165	*(8.53)*	*(7.79)*	*(7.77)*	*(7.25)*	*(7.23)*	*(6.41)*	*(6.15)*	*(6.14)*	*(5.88)*	*(5.77)*	*(5.80)*	*(5.54)*	*(5.46)*
4C140	1.21	1.02	0.993	0.912	0.896	0.807	0.770	0.762	0.701	0.675	0.669	0.647	0.640
4C145	*(3.54)*	*(2.97)*	*(2.91)*	*(2.67)*	*(2.62)*	*(2.36)*	*(2.25)*	*(2.23)*	*(2.05)*	*(1.98)*	*(1.96)*	*(1.89)*	*(1.87)*
4C160	3.04	2.76	2.74	2.55	2.53	2.24	2.14	2.13	2.03	1.99	1.99	1.90	1.87
4C165	*(8.91)*	*(8.08)*	*(8.02)*	*(7.46)*	*(7.41)*	*(6.54)*	*(6.26)*	*(6.23)*	*(5.94)*	*(5.81)*	*(5.83)*	*(5.56)*	*(5.47)*
4C170	10.4	9.70	9.67	9.32	9.30	8.77	8.69	8.68	8.40	8.29	8.18	8.14	8.10
4C175	*(30.5)*	*(28.4)*	*(28.3)*	*(27.3)*	*(27.2)*	*(25.7)*	*(25.4)*	*(25.4)*	*(24.6)*	*(24.3)*	*(23.9)*	*(23.8)*	*(23.7)*
4D160	3.37	3.02	2.95	2.73	2.68	2.35	2.23	2.21	2.08	2.02	2.02	1.92	1.88
4D165	*(9.86)*	*(8.85)*	*(8.64)*	*(8.00)*	*(7.85)*	*(6.87)*	*(6.53)*	*(6.46)*	*(6.09)*	*(5.92)*	*(5.90)*	*(5.62)*	*(5.51)*
4D170	10.7	9.96	9.89	9.50	9.45	8.88	8.79	8.76	8.45	8.32	8.21	8.16	8.12
4D175	*(31.4)*	*(29.1)*	*(28.9)*	*(27.8)*	*(27.7)*	*(26.0)*	*(25.7)*	*(25.6)*	*(24.7)*	*(24.4)*	*(24.0)*	*(23.9)*	*(23.8)*
4D180	15.7	14.9	14.8	13.7	13.7	13.0	12.8	12.8	12.4	12.0	11.9	11.8	11.7
4D185	*(46.0)*	*(43.5)*	*(43.3)*	*(40.1)*	*(40.0)*	*(38.0)*	*(37.4)*	*(37.4)*	*(36.2)*	*(35.2)*	*(34.9)*	*(34.6)*	*(34.4)*
4E170	11.2	10.3	10.21	9.76	9.68	9.05	8.92	8.88	8.53	8.38	8.25	8.19	8.14
4E175	*(32.9)*	*(30.2)*	*(29.9)*	*(28.6)*	*(28.3)*	*(26.5)*	*(26.1)*	*(26.0)*	*(25.0)*	*(24.5)*	*(24.1)*	*(24.0)*	*(23.8)*
4E180	16.2	15.2	15.1	14.0	13.9	13.2	12.9	12.9	12.5	12.1	12.0	11.8	11.8
4E185	*(47.4)*	*(44.5)*	*(44.2)*	*(40.9)*	*(40.7)*	*(38.5)*	*(37.8)*	*(37.7)*	*(36.5)*	*(35.3)*	*(35.0)*	*(34.7)*	*(34.4)*
4E190	40.0	37.1	37.0	35.9	35.9	34.7	33.8	33.8	33.2	32.8	32.5	32.3	32.1
4E195	*(117)*	*(109)*	*(108)*	*(105)*	*(105)*	*(102)*	*(98.9)*	*(98.8)*	*(97.1)*	*(96.0)*	*(95.2)*	*(94.6)*	*(94.1)*
4F180	17.7	16.3	16.1	14.7	14.6	13.7	13.3	13.2	12.7	12.2	12.1	11.9	11.8
4F185	*(51.9)*	*(47.7)*	*(47.1)*	*(43.1)*	*(42.7)*	*(40.0)*	*(38.9)*	*(38.7)*	*(37.2)*	*(35.8)*	*(35.4)*	*(34.9)*	*(34.6)*
4F190	41.6	38.3	38.1	36.7	36.6	35.3	34.2	34.1	33.4	33.0	32.7	32.4	32.2
4F195	*(122)*	*(112)*	*(111)*	*(108)*	*(107)*	*(103)*	*(100)*	*(99.9)*	*(97.9)*	*(96.6)*	*(95.6)*	*(94.9)*	*(94.3)*

Note: (1) The inertia tables does not include the inertia of the integral motors. Total unit inertia is obtained by adding the reducer inertia to the motor inertia.

Table 4.13 Reducer Moment of Inertia on Motor Shaft of Gearmotor: Solid Shaft [Left (L) or Right (R)] Output, Ratios 11 - 53[1]
Units: lb•in^2 *(x 10^{-4} kg•m^2)*

Model	Nominal Reduction Ratio												
	11	13	14	16	18	21	22	25	28	35	39	46	53
4A100	1.58	0.986	0.910	0.614	0.560	0.465	—	—	0.304	0.187	0.177	0.163	0.142
4A105	*(4.64)*	*(2.88)*	*(2.66)*	*(1.80)*	*(1.64)*	*(1.36)*	—	—	*(0.890)*	*(0.547)*	*(0.517)*	*(0.477)*	*(0.415)*
4A100	—	—	—	—	—	0.713	—	—	0.492	0.359	0.349	0.305	0.278
4A115	—	—	—	—	—	*(2.09)*	—	—	*(1.44)*	*(1.05)*	*(1.02)*	*(0.893)*	*(0.814)*
4A120	3.88	2.36	2.29	1.71	1.66	1.28	1.44	1.42	0.988	0.610	0.599	0.632	0.589
4A125	*(11.3)*	*(6.92)*	*(6.69)*	*(5.01)*	*(4.85)*	*(3.75)*	*(4.22)*	*(4.15)*	*(2.89)*	*(1.78)*	*(1.75)*	*(1.85)*	*(1.72)*
4A140	8.34	5.31	5.23	3.77	3.72	3.37	3.48	3.45	2.27	1.61	1.60	1.29	1.16
4A145	*(24.4)*	*(15.5)*	*(15.3)*	*(11.0)*	*(10.9)*	*(9.88)*	*(10.2)*	*(10.1)*	*(6.65)*	*(4.71)*	*(4.68)*	*(3.78)*	*(3.40)*
4B120	5.30	3.28	3.09	2.32	2.19	1.64	1.74	1.68	1.19	0.731	0.705	0.708	0.646
4B125	*(15.5)*	*(9.61)*	*(9.03)*	*(6.80)*	*(6.42)*	*(4.79)*	*(5.10)*	*(4.91)*	*(3.48)*	*(2.14)*	*(2.06)*	*(2.07)*	*(1.89)*
4B120	9.75	3.91	3.72	4.40	4.27	3.76	3.80	3.74	2.49	1.74	1.72	1.37	1.22
4B125	*(28.5)*	*(11.4)*	*(10.9)*	*(12.9)*	*(12.5)*	*(11.0)*	*(11.1)*	*(10.9)*	*(7.29)*	*(5.10)*	*(5.02)*	*(4.02)*	*(3.58)*
4B140	27.7	17.8	17.7	12.2	12.0	8.95	10.1	10.0	6.18	4.42	4.39	3.87	3.47
4B145	*(81.2)*	*(52.2)*	*(51.7)*	*(35.6)*	*(35.2)*	*(26.2)*	*(29.5)*	*(29.4)*	*(18.1)*	*(12.9)*	*(12.8)*	*(11.3)*	*(10.1)*
4B160	13.8	9.10	8.47	6.26	5.85	4.87	4.76	4.55	3.12	2.13	2.05	1.61	1.40
4B165	*(40.5)*	*(26.6)*	*(24.8)*	*(18.3)*	*(17.1)*	*(14.3)*	*(13.9)*	*(13.3)*	*(9.12)*	*(6.23)*	*(5.99)*	*(4.71)*	*(4.10)*
4C160	32.0	12.4	11.8	14.0	13.6	10.0	11.0	10.8	6.77	4.79	4.70	4.09	3.63
4C165	*(93.7)*	*(36.4)*	*(34.5)*	*(41.0)*	*(39.9)*	*(29.3)*	*(32.2)*	*(31.6)*	*(19.8)*	*(14.0)*	*(13.8)*	*(12.0)*	*(10.6)*
4C170	55.1	35.1	34.5	26.4	26.0	23.9	23.4	23.2	17.6	13.3	13.2	12.3	10.9
4C175	*(161)*	*(103)*	*(101)*	*(77.3)*	*(76.1)*	*(69.9)*	*(68.4)*	*(67.8)*	*(51.4)*	*(38.9)*	*(38.7)*	*(36.1)*	*(31.9)*
4D160	—	—	—	—	—	12.6	13.4	12.7	8.25	5.76	5.49	4.65	4.06
4D165	—	—	—	—	—	*(37.0)*	*(39.2)*	*(37.3)*	*(24.1)*	*(16.8)*	*(16.1)*	*(13.6)*	*(11.9)*
4D170	68.7	27.4	25.4	32.4	31.2	26.6	25.8	25.1	19.1	14.3	14.0	12.9	11.3
4D175	*(201)*	*(80.1)*	*(74.4)*	*(94.9)*	*(91.2)*	*(77.7)*	*(75.5)*	*(73.6)*	*(55.8)*	*(41.8)*	*(41.0)*	*(37.8)*	*(33.2)*
4D180	104	53.0	51.1	36.6	35.2	36.7	31.6	30.9	26.5	21.5	21.2	18.9	16.7
4D185	*(305)*	*(155)*	*(150)*	*(107)*	*(103)*	*(107)*	*(92.4)*	*(90.5)*	*(77.6)*	*(62.9)*	*(62.1)*	*(55.4)*	*(48.8)*
4E170	—	—	—	—	—	30.7	29.1	28.2	21.4	15.6	15.2	13.8	12.0
4E175	—	—	—	—	—	*(89.7)*	*(85.2)*	*(82.4)*	*(62.6)*	*(45.7)*	*(44.6)*	*(40.4)*	*(35.1)*
4E180	121	48.3	45.4	43.4	41.4	40.8	34.9	33.9	28.8	22.8	22.5	19.8	17.3
4E185	*(353)*	*(141)*	*(133)*	*(127)*	*(121)*	*(119)*	*(102)*	*(99.3)*	*(84.3)*	*(66.9)*	*(65.7)*	*(58.0)*	*(50.7)*
4E190	189	103	100	71.1	69.1	77.2	65.1	64.1	56.8	48.6	48.2	44.3	41.9
4E195	*(553)*	*(301)*	*(293)*	*(208)*	*(202)*	*(226)*	*(191)*	*(188)*	*(166)*	*(142)*	*(141)*	*(130)*	*(123)*
4F180	180	76.9	71.9	69.4	65.9	53.4	44.8	43.1	35.9	26.9	26.2	22.5	19.3
4F185	*(528)*	*(225)*	*(210)*	*(203)*	*(193)*	*(156)*	*(131)*	*(126)*	*(105)*	*(78.6)*	*(76.6)*	*(65.8)*	*(56.5)*
4F190	236	132	127	92.0	88.5	90.5	75.7	74.0	64.4	52.8	52.2	47.1	44.1
4F195	*(692)*	*(388)*	*(373)*	*(269)*	*(259)*	*(265)*	*(221)*	*(216)*	*(188)*	*(155)*	*(153)*	*(138)*	*(129)*

Note: (1) The inertia tables does not include the inertia of the integral motors. Total unit inertia is obtained by adding the reducer inertia to the motor inertia.

Table 4.14 Reducer Moment of Inertia on Motor Shaft of Gearmotor: Solid Shaft [Left (L) or Right (R)] Output, Ratios 60 - 305[1]
Units: lb•in^2 *(x 10^{-4} kg•m^2)*

Model	Nominal Reduction Ratio												
	60	67	74	80	88	102	112	123	151	179	207	249	305
4A100	0.102	0.108	0.105	0.094	0.092	0.064	0.060	0.058	0.053	0.070	0.047	0.067	0.045
4A105	*(0.298)*	*(0.315)*	*(0.307)*	*(0.276)*	*(0.270)*	*(0.188)*	*(0.175)*	*(0.169)*	*(0.155)*	*(0.206)*	*(0.138)*	*(0.196)*	*(0.131)*
4A110	0.260	0.228	0.225	0.217	0.215	0.207	0.197	0.196	0.191	0.185	0.183	0.181	0.179
4A115	*(0.761)*	*(0.666)*	*(0.658)*	*(0.635)*	*(0.629)*	*(0.605)*	*(0.578)*	*(0.575)*	*(0.559)*	*(0.541)*	*(0.536)*	*(0.529)*	*(0.525)*
4A120	0.441	0.496	0.493	0.456	0.454	0.320	0.303	0.302	0.286	0.396	0.272	0.384	0.261
4A125	*(1.29)*	*(1.45)*	*(1.44)*	*(1.33)*	*(1.33)*	*(0.936)*	*(0.887)*	*(0.884)*	*(0.838)*	*(1.159)*	*(0.795)*	*(1.125)*	*(0.763)*
4A140	1.03	0.877	0.874	0.814	0.812	0.745	0.720	0.719	0.673	0.655	0.654	0.637	0.633
4A145	*(3.01)*	*(2.57)*	*(2.56)*	*(2.38)*	*(2.38)*	*(2.18)*	*(2.11)*	*(2.10)*	*(1.97)*	*(1.92)*	*(1.91)*	*(1.86)*	*(1.85)*
4B120	0.486	0.529	0.522	0.479	0.474	0.335	0.317	0.313	0.293	0.401	0.275	0.387	0.262
4B125	*(1.42)*	*(1.55)*	*(1.53)*	*(1.40)*	*(1.39)*	*(0.98)*	*(0.93)*	*(0.91)*	*(0.86)*	*(1.17)*	*(0.81)*	*(1.13)*	*(0.768)*
4B140	1.08	0.912	0.905	0.839	0.834	0.761	0.733	0.730	0.680	0.660	0.658	0.639	0.635
4B145	*(3.15)*	*(2.67)*	*(2.65)*	*(2.46)*	*(2.44)*	*(2.23)*	*(2.14)*	*(2.14)*	*(1.99)*	*(1.93)*	*(1.93)*	*(1.87)*	*(1.86)*
4B160	2.92	2.66	2.66	2.48	2.47	2.19	2.10	2.10	2.01	1.97	1.98	1.89	1.86
4B165	*(8.54)*	*(7.79)*	*(7.77)*	*(7.25)*	*(7.24)*	*(6.41)*	*(6.15)*	*(6.14)*	*(5.88)*	*(5.77)*	*(5.80)*	*(5.54)*	*(5.46)*
4C140	1.21	1.02	0.996	0.914	0.898	0.809	0.776	0.763	0.702	0.675	0.670	0.647	0.640
4C145	*(3.55)*	*(2.98)*	*(2.91)*	*(2.68)*	*(2.63)*	*(2.37)*	*(2.27)*	*(2.23)*	*(2.05)*	*(1.98)*	*(1.96)*	*(1.89)*	*(1.87)*
4C160	3.05	2.77	2.74	2.55	2.53	2.24	2.14	2.13	2.03	1.99	1.99	1.90	1.87
4C165	*(8.92)*	*(8.09)*	*(8.03)*	*(7.46)*	*(7.41)*	*(6.55)*	*(6.26)*	*(6.24)*	*(5.94)*	*(5.81)*	*(5.83)*	*(5.56)*	*(5.47)*
4C170	10.4	9.70	9.68	9.32	9.30	8.77	8.69	8.68	8.40	8.29	8.18	8.14	8.10
4C175	*(30.5)*	*(28.4)*	*(28.3)*	*(27.3)*	*(27.2)*	*(25.7)*	*(25.4)*	*(25.4)*	*(24.6)*	*(24.3)*	*(23.9)*	*(23.8)*	*(23.7)*
4D160	3.38	3.03	2.96	2.74	2.69	2.35	2.24	2.21	2.08	2.02	2.02	1.92	1.88
4D165	*(9.88)*	*(8.87)*	*(8.65)*	*(8.01)*	*(7.86)*	*(6.88)*	*(6.56)*	*(6.46)*	*(6.09)*	*(5.92)*	*(5.91)*	*(5.62)*	*(5.51)*
4D170	10.7	9.97	9.89	9.51	9.46	8.88	8.79	8.76	8.45	8.32	8.21	8.16	8.12
4D175	*(31.5)*	*(29.2)*	*(29.0)*	*(27.8)*	*(27.7)*	*(26.0)*	*(25.7)*	*(25.6)*	*(24.7)*	*(24.4)*	*(24.0)*	*(23.9)*	*(23.8)*
4D180	15.7	14.9	14.8	13.7	13.7	13.0	12.8	12.8	12.4	12.0	11.9	11.8	11.7
4D185	*(46.0)*	*(43.5)*	*(43.3)*	*(40.2)*	*(40.0)*	*(38.0)*	*(37.4)*	*(37.4)*	*(36.2)*	*(35.2)*	*(34.9)*	*(34.6)*	*(34.4)*
4E170	11.3	10.3	10.2	9.77	9.69	9.06	8.94	8.88	8.53	8.38	8.25	8.19	8.14
4E175	*(33.0)*	*(30.3)*	*(29.9)*	*(28.6)*	*(28.4)*	*(26.5)*	*(26.2)*	*(26.0)*	*(25.0)*	*(24.5)*	*(24.1)*	*(24.0)*	*(23.8)*
4E180	16.2	15.2	15.1	14.0	13.9	13.2	12.9	12.9	12.5	12.1	12.0	11.8	11.8
4E185	*(47.5)*	*(44.6)*	*(44.3)*	*(40.9)*	*(40.7)*	*(38.5)*	*(37.8)*	*(37.7)*	*(36.5)*	*(35.3)*	*(35.1)*	*(34.7)*	*(34.4)*
4E190	40.0	37.1	37.0	35.9	35.9	34.8	33.8	33.8	33.2	32.8	32.5	32.3	32.1
4E195	*(117)*	*(109)*	*(108)*	*(105)*	*(105)*	*(102)*	*(98.9)*	*(98.8)*	*(97.1)*	*(96.0)*	*(95.2)*	*(94.6)*	*(94.1)*
4F180	17.8	16.3	16.2	14.8	14.6	13.7	13.3	13.3	12.7	12.2	12.1	11.9	11.8
4F185	*(52.1)*	*(47.8)*	*(47.3)*	*(43.2)*	*(42.8)*	*(40.1)*	*(39.0)*	*(38.8)*	*(37.2)*	*(35.8)*	*(35.4)*	*(34.9)*	*(34.6)*
4F190	41.7	38.3	38.1	36.8	36.6	35.3	34.2	34.2	33.4	33.0	32.7	32.4	32.2
4F195	*(122)*	*(112)*	*(112)*	*(108)*	*(107)*	*(103)*	*(100)*	*(99.9)*	*(97.9)*	*(96.6)*	*(95.6)*	*(94.9)*	*(94.3)*

Note: (1) The inertia tables does not include the inertia of the integral motors. Total unit inertia is obtained by adding the reducer inertia to the motor inertia.

Table 4.15 Reducer Moment of Inertia on Motor Shaft of Gearmotor: Dual Extended Solid Shaft (T) Output, Ratios 11 - 53[1]
Units: lb•in^2 *(x 10^{-4} kg•m^2)*

Model	Nominal Reduction Ratio												
	11	13	14	16	18	21	22	25	28	35	39	46	53
4A100	1.65	1.03	0.947	0.645	0.586	0.482	—	—	0.313	0.193	0.182	0.166	0.145
4A105	*(4.83)*	*(3.01)*	*(2.77)*	*(1.89)*	*(1.72)*	*(1.41)*	—	—	*(0.917)*	*(0.565)*	*(0.532)*	*(0.487)*	*(0.423)*
4A100	—	—	—	—	—	0.730	—	—	0.502	0.365	0.354	0.309	0.281
4A115	—	—	—	—	—	*(2.14)*	—	—	*(1.47)*	*(1.07)*	*(1.03)*	*(0.903)*	*(0.822)*
4A120	3.47	2.41	2.32	1.74	1.68	1.30	1.46	1.43	0.997	0.616	0.604	0.635	0.592
4A125	*(10.2)*	*(7.05)*	*(6.80)*	*(5.09)*	*(4.93)*	*(3.80)*	*(4.27)*	*(4.18)*	*(2.92)*	*(1.80)*	*(1.77)*	*(1.86)*	*(1.73)*
4A140	7.29	5.35	5.27	3.80	3.75	3.39	3.48	3.46	2.28	1.62	1.61	1.29	1.17
4A145	*(21.3)*	*(15.7)*	*(15.4)*	*(11.1)*	*(11.0)*	*(9.93)*	*(10.2)*	*(10.1)*	*(6.68)*	*(4.73)*	*(4.70)*	*(3.79)*	*(3.41)*
4B120	5.46	3.39	3.17	2.40	2.25	1.68	1.78	1.71	1.21	0.745	0.717	0.716	0.652
4B125	*(16.0)*	*(9.92)*	*(9.29)*	*(7.01)*	*(6.59)*	*(4.91)*	*(5.20)*	*(5.00)*	*(3.54)*	*(2.18)*	*(2.10)*	*(2.09)*	*(1.91)*
4B120	9.90	6.36	6.15	4.47	4.33	3.80	3.84	3.76	2.51	1.76	1.73	1.38	1.23
4B125	*(29.0)*	*(18.6)*	*(18.0)*	*(13.1)*	*(12.7)*	*(11.1)*	*(11.2)*	*(11.0)*	*(7.36)*	*(5.14)*	*(5.06)*	*(4.04)*	*(3.60)*
4B140	23.9	18.0	17.7	12.2	12.1	9.0	10.1	10.1	6.20	4.43	4.40	3.88	3.47
4B145	*(70.0)*	*(52.5)*	*(51.9)*	*(35.8)*	*(35.4)*	*(26.3)*	*(29.6)*	*(29.4)*	*(18.1)*	*(13.0)*	*(12.9)*	*(11.3)*	*(10.2)*
4B160	14.2	9.34	8.68	6.42	5.98	4.96	4.84	4.62	3.17	2.16	2.07	1.63	1.42
4B165	*(41.5)*	*(27.3)*	*(25.4)*	*(18.8)*	*(17.5)*	*(14.5)*	*(14.2)*	*(13.5)*	*(9.27)*	*(6.33)*	*(6.07)*	*(4.77)*	*(4.15)*
4C160	32.4	21.1	20.4	14.2	13.8	10.1	11.1	10.9	6.82	4.82	4.73	4.11	3.65
4C165	*(94.8)*	*(61.8)*	*(59.8)*	*(41.5)*	*(40.3)*	*(29.5)*	*(32.5)*	*(31.8)*	*(20.0)*	*(14.1)*	*(13.8)*	*(12.0)*	*(10.7)*
4C170	47.8	35.3	34.7	26.6	26.2	24.0	23.5	23.2	17.6	13.3	13.2	12.4	10.9
4C175	*(140)*	*(103)*	*(102)*	*(77.8)*	*(76.5)*	*(70.2)*	*(68.7)*	*(68.0)*	*(51.6)*	*(39.0)*	*(38.7)*	*(36.2)*	*(32.0)*
4D160	—	—	—	—	—	12.8	13.6	12.9	8.36	5.83	5.55	4.70	4.09
4D165	—	—	—	—	—	*(37.6)*	*(39.7)*	*(37.7)*	*(24.5)*	*(17.0)*	*(16.2)*	*(13.7)*	*(12.0)*
4D170	69.5	44.8	42.8	32.8	31.4	26.8	25.8	25.3	19.2	14.3	14.1	13.0	11.4
4D175	*(203)*	*(131)*	*(125)*	*(95.9)*	*(92.0)*	*(78.3)*	*(75.6)*	*(74.0)*	*(56.2)*	*(42.0)*	*(41.2)*	*(37.9)*	*(33.3)*
4D180	82.7	53.5	51.5	36.9	35.5	36.9	31.7	31.1	26.6	21.6	21.3	19.0	16.7
4D185	*(242)*	*(157)*	*(151)*	*(108)*	*(104)*	*(108)*	*(92.9)*	*(90.9)*	*(77.9)*	*(63.1)*	*(62.3)*	*(55.5)*	*(48.8)*
4E170	—	—	—	—	—	31.0	29.5	28.4	21.6	15.8	15.3	13.9	12.1
4E175	—	—	—	—	—	*(90.9)*	*(86.2)*	*(83.2)*	*(63.2)*	*(46.1)*	*(44.9)*	*(40.6)*	*(35.3)*
4E180	122	63.8	60.7	44.1	42.0	41.2	35.3	34.2	29.0	23.0	22.6	19.9	17.4
4E185	*(358)*	*(187)*	*(178)*	*(129)*	*(123)*	*(121)*	*(103)*	*(100)*	*(85.0)*	*(67.3)*	*(66.0)*	*(58.2)*	*(50.9)*
4E190	153	104	101	71.8	69.7	77.5	65.4	64.4	57.0	48.7	48.3	44.4	42.0
4E195	*(446)*	*(304)*	*(295)*	*(210)*	*(204)*	*(227)*	*(192)*	*(188)*	*(167)*	*(143)*	*1(41)*	*(130)*	*(123)*
4F180	182	100	95.1	70.3	66.6	53.9	46.1	43.5	36.2	27.0	26.3	22.6	19.4
4F185	*(534)*	*(293)*	*(278)*	*(206)*	*(195)*	*(158)*	*(135)*	*(127)*	*(106)*	*(79.1)*	*(77.1)*	*(66.1)*	*(56.8)*
4F190	200	134	129	92.9	89.2	91.0	76.1	74.3	64.6	53.0	52.3	47.2	44.1
4F195	*(587)*	*(391)*	*(376)*	*(272)*	*(261)*	*(266)*	*(223)*	*(218)*	*(189)*	*(155)*	*(153)*	*(138)*	*(129)*

Note: (1) The inertia tables does not include the inertia of the integral motors. Total unit inertia is obtained by adding the reducer inertia to the motor inertia.

Table 4.16 Reducer Moment of Inertia on Motor Shaft of Gearmotor: Dual Extended Solid Shaft (T) Output, Ratios 60 - 305[1]
Units: lb•in^2 *(x 10^{-4} kg•m^2)*

Model	Nominal Reduction Ratio												
	60	67	74	80	88	102	112	123	151	179	207	249	305
4A100	0.104	0.109	0.106	0.095	0.093	0.065	0.059	0.058	0.053	0.071	0.047	0.067	0.045
4A105	*(0.304)*	*(0.320)*	*(0.311)*	*(0.279)*	*(0.273)*	*(0.191)*	*(0.174)*	*(0.171)*	*(0.156)*	*(0.207)*	*(0.139)*	*(0.197)*	*(0.131)*
4A110	0.262	0.229	0.226	0.218	0.216	0.208	0.198	0.197	0.191	0.185	0.183	0.181	0.180
4A115	*(0.767)*	*(0.671)*	*(0.662)*	*(0.638)*	*(0.632)*	*(0.607)*	*(0.579)*	*(0.576)*	*(0.560)*	*(0.541)*	*(0.537)*	*(0.530)*	*(0.526)*
4A120	0.443	0.498	0.495	0.457	0.455	0.321	0.304	0.303	0.287	0.396	0.272	0.384	0.261
4A125	*(1.30)*	*(1.46)*	*(1.45)*	*(1.34)*	*(1.33)*	*(0.938)*	*(0.889)*	*(0.886)*	*(0.839)*	*(1.16)*	*(0.795)*	*(1.13)*	*(0.763)*
4A140	1.03	0.878	0.875	0.815	0.813	0.745	0.720	0.719	0.673	0.655	0.654	0.637	0.633
4A145	*(3.01)*	*(2.57)*	*(2.56)*	*(2.39)*	*(2.38)*	*(2.18)*	*(2.11)*	*(2.10)*	*(1.97)*	*(1.92)*	*(1.92)*	*(1.86)*	*(1.85)*
4B120	0.490	0.533	0.525	0.482	0.476	0.337	0.317	0.314	0.294	0.401	0.276	0.387	0.263
4B125	*(1.44)*	*(1.56)*	*(1.54)*	*(1.41)*	*(1.39)*	*(0.985)*	*(0.926)*	*(0.918)*	*(0.860)*	*(1.18)*	*(0.807)*	*(1.13)*	*(0.769)*
4B140	1.08	0.916	0.909	0.842	0.836	0.763	0.734	0.731	0.681	0.661	0.659	0.640	0.635
4B145	*(3.16)*	*(2.68)*	*(2.66)*	*(2.46)*	*(2.45)*	*(2.23)*	*(2.15)*	*(2.14)*	*(1.99)*	*(1.93)*	*(1.93)*	*(1.87)*	*(1.86)*
4B160	2.92	2.67	2.66	2.48	2.48	2.19	2.10	2.10	2.01	1.97	1.98	1.89	1.86
4B165	*(8.55)*	*(7.81)*	*(7.78)*	*(7.26)*	*(7.24)*	*(6.42)*	*(6.16)*	*(6.15)*	*(5.88)*	*(5.77)*	*(5.80)*	*(5.54)*	*(5.46)*
4C140	1.23	1.03	1.00	0.921	0.903	0.813	0.774	0.765	0.704	0.677	0.671	0.648	0.640
4C145	*(3.59)*	*(3.01)*	*(2.94)*	*(2.69)*	*(2.64)*	*(2.38)*	*(2.27)*	*(2.24)*	*(2.06)*	*(1.98)*	*(1.96)*	*(1.90)*	*(1.87)*
4C160	3.06	2.77	2.75	2.56	2.54	2.24	2.14	2.13	2.03	1.99	1.99	1.90	1.87
4C165	*(8.96)*	*(8.12)*	*(8.05)*	*(7.48)*	*(7.43)*	*(6.56)*	*(6.27)*	*(6.24)*	*(5.94)*	*(5.82)*	*(5.83)*	*(5.56)*	*(5.47)*
4C170	10.4	9.71	9.68	9.33	9.31	8.77	8.70	8.69	8.40	8.29	8.18	8.14	8.11
4C175	*(30.5)*	*(28.4)*	*(28.3)*	*(27.3)*	*(27.2)*	*(25.7)*	*(25.4)*	*(25.4)*	*(24.6)*	*(24.3)*	*(23.9)*	*(23.8)*	*(23.7)*
4D160	3.40	3.05	2.97	2.75	2.70	2.36	2.24	2.21	2.08	2.03	2.02	1.92	1.88
4D165	*(9.95)*	*(8.93)*	*(8.70)*	*(8.05)*	*(7.89)*	*(6.90)*	*(6.56)*	*(6.48)*	*(6.10)*	*(5.93)*	*(5.91)*	*(5.62)*	*(5.51)*
4D170	10.8	9.99	9.91	9.52	9.47	8.89	8.80	8.77	8.45	8.33	8.21	8.16	8.12
4D175	*(31.5)*	*(29.2)*	*(29.0)*	*(27.9)*	*(27.7)*	*(26.0)*	*(25.7)*	*(25.7)*	*(24.7)*	*(24.4)*	*(24.0)*	*(23.9)*	*(23.8)*
4D180	15.7	14.9	14.8	13.7	13.7	13.0	12.8	12.8	12.4	12.0	11.9	11.8	11.7
4D185	*(46.1)*	*(43.6)*	*(43.3)*	*(40.2)*	*(40.0)*	*(38.0)*	*(37.5)*	*(37.4)*	*(36.2)*	*(35.2)*	*(34.9)*	*(34.6)*	*(34.4)*
4E170	11.3	10.4	10.3	9.80	9.72	9.08	8.94	8.89	8.54	8.39	8.25	8.19	8.14
4E175	*(33.1)*	*(30.4)*	*(30.0)*	*(28.7)*	*(28.4)*	*(26.6)*	*(26.2)*	*(26.0)*	*(25.0)*	*(24.5)*	*(24.2)*	*(24.0)*	*(23.8)*
4E180	16.3	15.3	15.2	14.0	13.9	13.2	12.9	12.9	12.5	12.1	12.0	11.9	11.8
4E185	*(47.7)*	*(44.7)*	*(44.4)*	*(41.0)*	*(40.8)*	*(38.6)*	*(37.9)*	*(37.7)*	*(36.5)*	*(35.4)*	*(35.1)*	*(34.7)*	*(34.4)*
4E190	40.1	37.2	37.1	36.0	35.9	34.8	33.8	33.8	33.2	32.8	32.5	32.3	32.1
4E195	*(117)*	*(109)*	*(108)*	*(105)*	*(105)*	*(102)*	*(98.9)*	*(98.8)*	*(97.1)*	*(96.0)*	*(95.2)*	*(94.6)*	*(94.1)*
4F180	17.9	16.4	16.2	14.8	14.7	13.7	13.3	13.3	12.7	12.3	12.1	11.9	11.8
4F185	*(52.3)*	*(48.0)*	*(47.4)*	*(43.3)*	*(42.9)*	*(40.2)*	*(39.0)*	*(38.8)*	*(37.2)*	*(35.9)*	*(35.4)*	*(34.9)*	*(34.6)*
4F190	41.7	38.4	38.2	36.8	36.7	35.4	34.2	34.2	33.5	33.0	32.7	32.4	32.2
4F195	*(122)*	*(112)*	*(112)*	*(108)*	*(107)*	*(103)*	*(100)*	*(100.0)*	*(97.9)*	*(96.6)*	*(95.6)*	*(94.9)*	*(94.3)*

Note: (1) The inertia tables does not include the inertia of the integral motors. Total unit inertia is obtained by adding the reducer inertia to the motor inertia.

Table 4.17a Moment of Inertia on Motor Shaft of V-Frame Integral Motor

Units: lb-inch^2 *(x 10^{-4} kg-m^2)*

1/8 HP *(0.1 kW)* x 4 Pole		1/4 HP *(0.2 kW)* x 4 Pole		1/3 HP *(0.25 kW)* x 4 Pole		1/2 HP *(0.4 kW)* x 4 Pole		3/4 HP *(0.55 kW)* x 4 Pole	
Standard	**w/ Brake**	**Standard**	**w/Brake**	**Standard**	**w/Brake**	**Standard**	**w/Brake**	**Standard**	**w/Brake**
1.11	1.2	1.71	1.88	1.71	1.88	2.22	2.31	3.45	3.79
(3.25)	(3.5)	(5)	(5.5)	(5)	(5.5)	(6.5)	(6.75)	(10.1)	(11.1)

Table 4.17b Moment of Inertia on Motor Shaft of V-Frame AF Integral Motor

1/8 HP *(0.1 kW)* x 4 Pole		1/4 HP *(0.2 kW)* x 4 Pole		1/3 HP *(0.25 kW)* x 4 Pole		1/2 HP *(0.4 kW)* x 4 Pole		3/4 HP *(0.55 kW)* x 4 Pole	
Standard	**w/ Brake**	**Standard**	**w/Brake**	**Standard**	**w/Brake**	**Standard**	**w/Brake**	**Standard**	**w/Brake**
1.71	1.88	2.22	2.31	2.22	2.31	4.1	4.44	6.32	7.11
(5)	(5.5)	(6.5)	(6.75)	(6.5)	(6.75)	(12)	(13)	(18.5)	(20.8)

Table 4.17c Moment of Inertia on Motor Shaft of N-Frame Integral Motor

1 HP *(0.75 kW)* x 4 Pole		1.5 HP *(1.1 kW)* x 4 Pole		2 HP *(1.5 kW)* x 4 Pole		3 HP *(2.2 kW)* x 4 Pole		5 HP *(3.7 kW)* x 4 Pole	
Standard	**w/ Brake**	**Standard**	**w/Brake**	**Standard**	**w/Brake**	**Standard**	**w/Brake**	**Standard**	**w/Brake**
8.03	8.82	11.5	13.5	13.4	15.4	30.1	33.4	66.3	71.4
(23.5)	(25.8)	(33.7)	(39.6)	(39.1)	(45)	(88)	(97.8)	(194)	(209)

7.5 HP *(5.5 kW)* x 4 Pole		10 HP *(7.5 kW)* x 4 Pole		15 HP *(11 kW)* x 4 Pole		20 HP *(15 kW)* x 4 Pole		25 HP *(18.5 kW)* x 4 Pole	
Standard	**w/ Brake**	**Standard**	**w/ Brake**	**Standard**	**w/ Brake**	**Standard**	**w/ Brake**	**Standard**	**w/ Brake**
99.4	105	140	154	192	206	340	393	875	926
(291)	(306)	(409)	(450)	(561)	(602)	(995)	(1150)	(2560)	(2710)

30 HP *(22 kW)* x 4 Pole		40 HP *(30 kW)* x 4 Pole		50 HP *(37 kW)* x 4 Pole		60 HP *(45 kW)* x 4 Pole		75 HP *(55 kW)* x 4 Pole	
Standard	**w/ Brake**	**Standard**	**w/ Brake**	**Standard**	**w/ Brake**	**Standard**	**w/ Brake**	**Standard**	**w/ Brake**
875	926	1110	1170	1330	1380	2500	2550	2950	-
(2560)	(2710)	(3260)	(3420)	(3900)	(4040)	(7310)	(7450)	(8640)	-

Special Load Guidelines **Misc.**

Excessive Overloads

Cyclo® BBB4 Speed Reducers provide 200% momentary intermittent shock load capacity and are warranted for two years from date of shipment. Refer to our standard terms and conditions for our complete warranty.

Selection for Applications Involving Shock Loading

For applications involving frequent start-stop, review the recommendations in the selection procedure. For braking or reversing, or quick starting of loads having large inertia, consult factory for model selection or recommended modifications.

Allowable Radial and Thrust Loads

The loads imposed on the reducer shafts vary with the method of connecting the shaft to the driven machine. Frequently, in addition to torsional forces, radial and thrust loads are applied to the slow speed shaft at the same time. For example, coupling connections normally involve torsional forces only. However, when power is transmitted through spur gears, belts, pulleys or chains, both torsional and radial forces may be applied to the reducer shafts. When driving through helical or bevel gears, all three conditions (torsional, radial and thrust load) may be referred to the reducer shaft.

The reducer shafts and bearings must have sufficient strength to withstand these loads, and it is, therefore, necessary to determine the allowable limits for each condition. Please consult factory for further information.

Load Centering

The radial load capacities are calculated with the load concentrated at the midpoint of the slow speed shaft extension. Radial load capacities decrease if the center of the load is moved farther from the reducer and the values obtained from the charts must be adjusted accordingly..

Sold & Serviced By:
ELECTROMATE
Toll Free Phone (877) SERVO98
www.electromate.com
sales@electromate.com

Lubrication

Oil lubricated models are not filled with oil prior to shipping.

Before operating, fill the unit with the appropriate amount of the correct lubricant for the mounting position (see Table 4.22 and Table 4.23).
When operating in winter or other relatively low ambient temperatures, use the lower viscosity oil specified for each ambient temperature range.
Please consult the factory if the unit will be operated consistently in ambient temperatures other than 14°F to 104°F (-10° to 40°C).

Grease lubricated models are lubricated with grease prior to shipment from the factory.

NOTE: For units supplied in the Y4 mounting position (input shaft vertical down), the Cyclo® portion is filled at the factory with grease. For these units, the Cyclo® portion does not need to be filled with lubricant before start-up. The Bevel Gear portion of models built for the Y4 mounting configuration still requires filling with gear oil before start-up. Refer to the unit Operating and Maintenance manual for further details.

Adding grease prior to initial start-up is not required. If grease must be replenished or changed avoid using greases other than those shown in the Table 4.20. Please consult the factory when the units will be used in widely fluctuating temperatures, ambient temperatures other than those specified in Table 4.20, or when other special conditions exist for the application. When motors from another manufacturer will be used, please consult and adhere to the associated motor maintenance manual for the appropriate lubrication instructions.

Oil lubricated units are shipped without oil. Prior to initial start-up, the unit must be filled with the correct amount of oil (see Table 4.22 and Table 4.23).

Grease lubricated models are lubricated at the factory. Additional grease does not need to be added prior to initial start-up.

Table 4.18 Lubrication Type

Unit Size	Output (Bevel Gear Portion)	Input (Cyclo® Portion)		
		Motor Horizontal	Motor Vertical Up	Motor Vertical Down
All	Oil	Oil	Oil	Grease

Approved Oils:

ExxonMobil	Spartan EP	**Idemitsu**	Daphne Super Gear Oil	**BP**	Energol GR-XP
ExxonMobil	Mobilgear 600XP	**Kluber**	Kluberoll GEM1	**Castrol**	Alpha SP
ExxonMobil	Mobil SHC Gear Hi-Shock 150	**Caltex**	Meropa	**Gulf**	EP Lubricant HD
				Shell	Omala S2 G

Table 4.19 Ambient Temperatures

°F	14	32	50	68	86	104	122
°C	-10	0	10	20	30	40	50
ISO VG	**68* (14° F to 41° F)**						
		100 / 150 (32° F to 95° F)					
					220 / 320 / 460 (86° F to 122° F)		

Food Grade Oil: Klüber: Klübersynth UH1 6-460

Table 4.20 Standard Greases

Ambient Temperature °F *(°C)*	Reduction Ratio	Input (Cyclo® Portion)
14° to 122°F *(-10° to 50°C)*	11 through 18:1	N/A**
	19:1 and higher	Exxon Unirex N2

Table 4.21 Food Grade Grease

Ambient Temperature °F *(°C)*	Reduction Ratio	Input (Cyclo® Portion)
14° to 122°F *(-10° to 50°C)*	11 through 18:1	N/A
	19:1 and higher	Ultrachem Omnilube FGM2

Oil Replenishment and Change Interval

A. Maintain proper oil levels at all times.

B. An oil change after the first 500 hours of operation is highly recommended.

C. Sumitomo recommends an oil change every 2500 hours, or six months, whichever comes first. If a proper preventive maintenance program is implemented and maintained, a longer change period may be acceptable.

D. For any operating conditions outside our standard (page xx), consult factory for recommendations.

Grease Replenishment and Change Interval

For units ordered for mounting in the Y4 configuration (motor vertical down), please consult the Operating and Maintenance manual for proper grease replentishment and change interval for the Cyclo® portion.

*VG68 is not available for ExxonMobil Spartan.
**Shell Gadus S2 V220 NLGI 0 can be used for 4A100 and 4A105 sizes only

Oil Quantities

Be sure to check the oil level with the oil gauge. The following listed oil quantity is an approximation.

Table 4.22 BBB with Single Reduction Cyclo - Approximate Oil Quantity

Units: US liquid gallon *(liter)* **Note: Output =** Bevel Gear Portion **Input =** Cyclo® Portion

Bevel Gear Unit Size	Mounting Configuration						
	Y1	Y3	Y2	Y4		Y5	Y6
4A10	0.43 *(1.62)*		0.84*(3.17)*	0.30 *(1.13)*	Grease	0.36 *(1.36)*	0.49 *(1.84)*
4A11	0.44 *(1.66)*		0.86*(3.26)*			0.37 *(1.40)*	0.50 *(1.88)*
4A12	0.45 *(1.71)*		0.88 *(3.35)*			0.38 *(1.45)*	0.51 *(1.93)*
4A14	0.50 *(1.91)*		1.00 *(3.77)*			0.44 *(1.65)*	0.56 *(2.13)*
4B12	0.87 *(3.29)*		1.72 *(6.50)*	0.45 *(1.72)*	Grease	0.88 *(3.34)*	0.85 *(3.23)*
4B14	0.92 *(3.49)*		1.84 *(6.97)*			0.94 *(3.54)*	0.91 *(3.43)*
4B16	1.04 *(3.92)*		2.01 *(7.61)*			1.05 *(3.97)*	1.02 *(3.86)*
4C14	1.46 *(5.52)*		2.94 *(11.1)*	0.72 *(2.72)*	Grease	1.40 *(5.30)*	1.55 *(5.88)*
4C16	1.57 *(5.96)*		3.11 *(11.8)*			1.52 *(5.74)*	1.67 *(6.32)*
4C17	1.67 *(6.34)*		3.31 *(12.5)*			1.62 *(6.12)*	1.77 *(6.70)*
4D16	2.66 *(10.1)*		5.26 *(19.9)*	1.22 *(4.61)*	Grease	2.56 *(9.69)*	2.76 *(10.4)*
4D17	2.75 *(10.4)*		5.41 *(20.5)*			2.65 *(10.0)*	2.85 *(10.8)*
4D18	2.83*(10.7)*		5.54 *(21.0)*			2.72 *(10.3)*	2.93 *(11.1)*
4E17	3.85 *(14.6)*		7.60 *(28.8)*	1.66 *(6.26)*	Grease	3.45 *(13.1)*	4.24 *(16.1)*
4E18	3.88 *(14.7)*		7.70 *(29.1)*			3.49 *(13.2)*	4.28 *(16.2)*
4E19	4.14 *(15.7)*		8.04 *(30.4)*			3.75 *(14.2)*	4.54 *(17.2)*
4F18	5.28 *(20.0)*		10.41 *(39.4)*	1.92 *(7.28)*	Grease	4.89 *(18.5)*	5.65 *(21.4)*
4F19	5.50 *(20.8)*		10.74 *(40.6)*			5.10 *(19.3)*	5.86 *(22.2)*

Table 4.23 BBB with Double Reduction Cyclo - Approximate Oil Quantity

Units: US liquid gallon *(liter)* **Note: Output =** Bevel Gear Portion **Input =** Cyclo® Portion

Bevel Gear Unit Size	Mounting Configuration						
	Y1	Y3	Y2	Y4		Y5	Y6
4A10DA	0.44 *(1.65)*		0.84 *(3.20)*	0.30 *(1.13)*	Grease	0.37 *(1.39)*	0.49 *(1.87)*
4A12DA	0.46 *(1.74)*		0.89 *(3.38)*			0.39 *(1.48)*	0.52 *(1.96)*
4A12DB	0.47 *(1.78)*		0.90 *(3.43)*			0.40 *(1.52)*	0.53 *(2.00)*
4B12DA	0.88 *(3.32)*		1.73 *(6.53)*	0.45 *(1.72)*	Grease	0.89 *(3.37)*	0.86 *(3.26)*
4B12DB	0.89 *(3.36)*		1.73 *(6.57)*			0.90 *(3.41)*	0.87 *(3.30)*
4B14DA	0.93 *(3.52)*		1.85 *(7.00)*			0.94 *(3.57)*	0.91 *(3.46)*
4B14DB	0.94 *(3.56)*		1.86 *(7.04)*			0.95*(3.61)*	0.92 *(3.50)*
4B14DC	0.95*(3.61)*		1.89*(7.17)*			0.97*(3.66)*	0.94*(3.55)*
4C14DA	1.47*(5.55)*		2.95 *(11.2)*	0.72 *(2.72)*	Grease	1.41 *(5.33)*	1.56 *(5.91)*
4C14DB	1.48 *(5.59)*		2.96 *(11.2)*			1.42 *(5.37)*	1.57 *(5.95)*
4C14DC	1.49 *(5.64)*		2.97 *(11.3)*			1.43 *(5.42)*	1.59 *(6.00)*
4C16DA	1.59 *(6.03)*		3.13 *(11.8)*			1.53 *(5.81)*	1.69 *(5.39)*
4C16DB	1.61 *(6.08)*		3.14 *(11.9)*			1.55 *(5.86)*	1.70 *(6.44)*
4C17DA	1.69 *(6.41)*		3.33 *(12.6)*			1.63 *(6.19)*	1.79 *(6.77)*
4C17DB	1.70*(6.44)*		3.33*(12.60)*			1.67(6.32)	1.80*(6.80)*
4C17DC	1.75*(6.64)*		3.35*(12.70)*			1.70(6.42)	1.82*(6.90)*
4D16DA	2.68 *(10.1)*		5.27 *(20.0)*	1.22 *(4.61)*	Grease	2.58 *(9.76)*	2.77 *(10.5)*
4D16DB	2.69 *(10.2)*		5.29 *(20.0)*			2.59 *(9.81)*	2.79 *(10.6)*
4D16DC	2.72*(10.3)*		5.31*(20.1)*			2.59*(9.82)*	2.83*(10.7)*
4D17DA	2.69*(10.2)*		5.28*(20.0)*			2.59*(9.81)*	2.80*(10.6)*
4D17DB	2.78 *(10.5)*		5.44 *(20.6)*			2.68 *(10.2)*	2.88 *(10.9)*
4D17DC	2.82 *(10.7)*		5.48 *(20.7)*			2.72 *(10.3)*	2.91 *(11.0)*
4D18DA	2.85*(10.8)*		5.57*(21.1)*			*2.77(10.5)*	*2.96(11.2)*
4D18DB	3.09*(11.7)*		5.65*(21.4)*			*3.01(11.4)*	*3.20(12.1)*
4E17DA	3.86 *(14.6)*		7.62 *(28.8)*	1.65 *(6.26)*	Grease	3.47 *(13.1)*	4.26 *(16.1)*
4E17DB	3.88 *(14.7)*		7.63 *(28.9)*			3.48 *(13.2)*	4.27 *(16.2)*
4E17DC	3.91 *(14.8)*		7.67 *(29.0)*			3.52 *(13.3)*	4.31 *(16.3)*
4E18DA	3.9 *(14.8)*		7.7 *(29.3)*	1.7 *(6.3)*	Grease	3.5 *(13.3)*	4.3 *(16.3)*
4E18DB	4.1 *(15.7)*		7.8 *(29.6)*			3.8 *(14.2)*	4.5 *(17.2)*
4E19DA	4.6 *(17.5)*		8.2 *(31)*			4.2 *(16)*	5 *(19)*
4E19DB	4.7 *(17.7)*		8.2 *(31)*			4.3 *(16.2)*	5.1 *(19.2)*
4F18DA	5.3 *(20.1)*		10.5 *(39.6)*	1.9 *(7.3)*		4.9 *(18.6)*	5.7 *(21.5)*
4F18DB	5.5 *(21)*		10.5 *(39.9)*			5.2 *(19.5)*	5.9 *(22.4)*
4F19DA	6 *(22.6)*		10.9 *(41.2)*			5.6 *(21.1)*	6.3 *(24)*
4F19DB	6 *(22.8)*		10.9 *(41.2)*			5.6 *(21.3)*	6.4 *(24.2)*

Motor Optional Conduit Box Location

Table 4.24 - BBB4 Y1 Mounting

Cable Port Direction	Terminal Box Mounting Position			
	Left Side (N33) (Viewed from Gearbox Side)	**Right Side (N34)** (Viewed from Gearbox Side)	**Top Side (N35)** (Viewed from Gearbox Side)	**Bottom Side (N36)** (Viewed from Gearbox Side)
Type A (N3A)	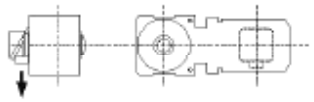	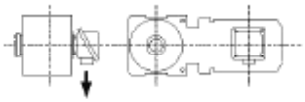	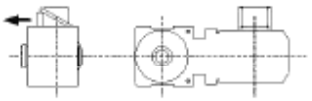	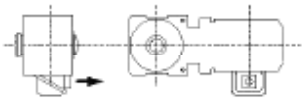
Type B (N3B)	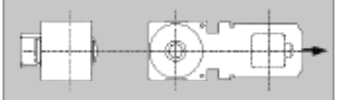	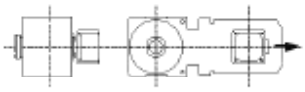	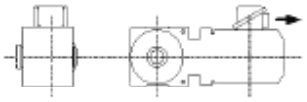	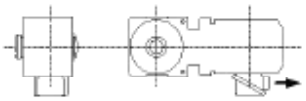
Type C (N3C)	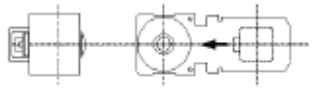	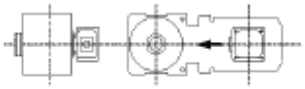	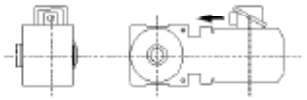	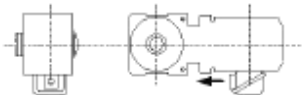
Type D (N3D)	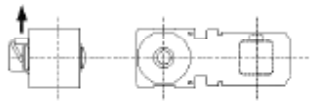	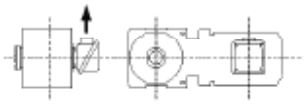	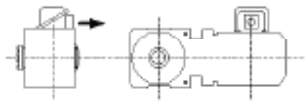	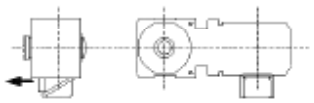

Table 4.25 - BBB4 Y2 Mounting

Cable Port Direction	Terminal Box Mounting Position			
	Left Side (N33) (Viewed from Gearbox Side)	**Right Side (N34)** (Viewed from Gearbox Side)	**Top Side (N35)** (Viewed from Gearbox Side)	**Bottom Side (N36)** (Viewed from Gearbox Side)
Type A (N3A)	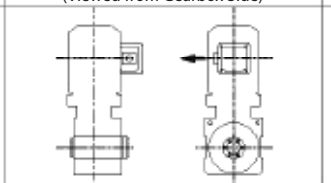	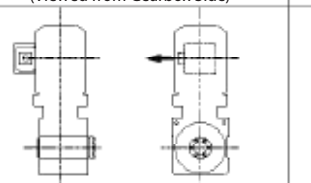	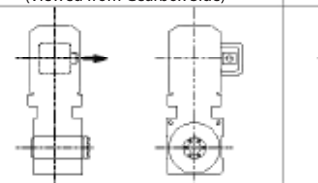	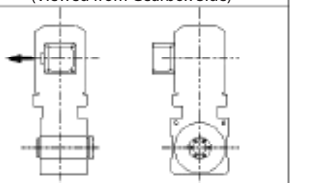
Type B (N3B)	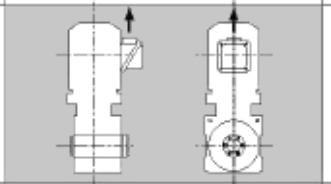	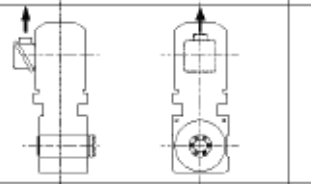	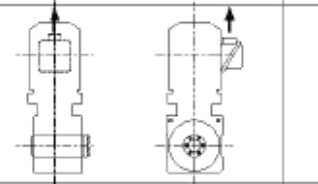	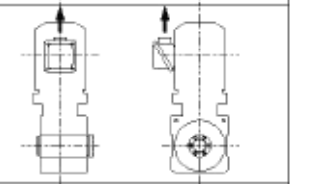
Type C (N3C)	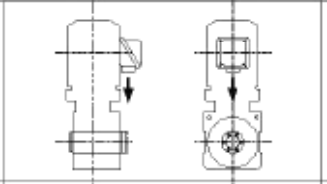	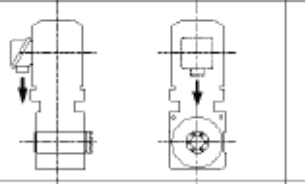	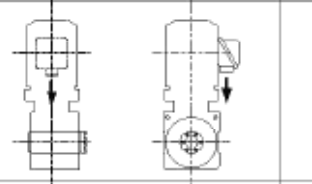	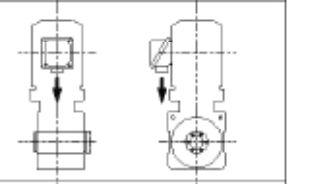
Type D (N3D)	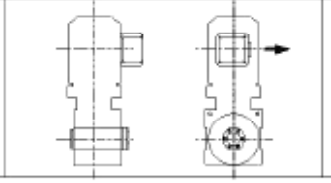	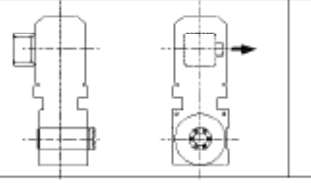	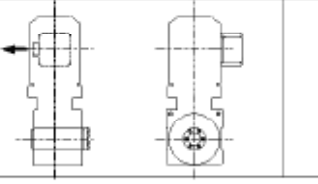	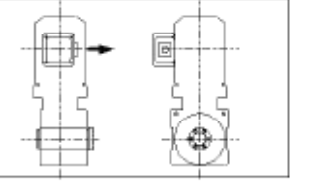

Special consideration must be given to terminal box location N35 in mounting position Y2 if the unit is oil lubricated. The conduit box may interfere with the unit's oil plumbing system. Another conduit box location should be selected if possible. If location N35 must be used, consult the factory.

NOTE: Default Terminal Box position for Gearmotors is N33/ N3B for all mounting positions (Y1 thru Y6), as highlighted in grey.

←—: The arrow indicates direction of lead wire out of conduit box.

Table 4.26 - BBB4 Y3 Mounting

Cable Port Direction	Terminal Box Mounting Position			
	Left Side (N33) (Viewed from Gearbox Side)	**Right Side (N34)** (Viewed from Gearbox Side)	**Top Side (N35)** (Viewed from Gearbox Side)	**Bottom Side (N36)** (Viewed from Gearbox Side)
Type A (N3A)	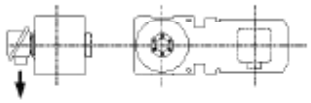	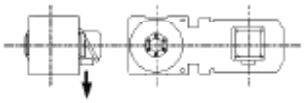	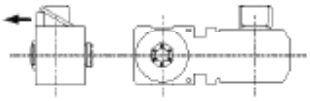	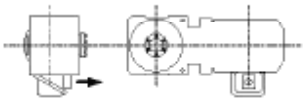
Type B (N3B)	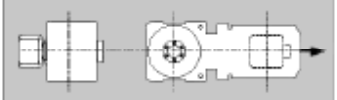	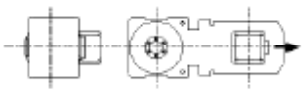	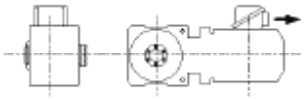	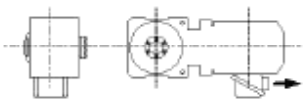
Type C (N3C)	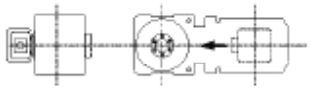	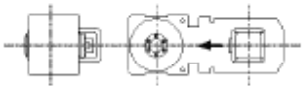	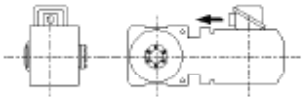	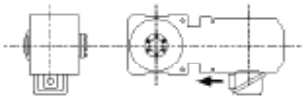
Type D (N3D)	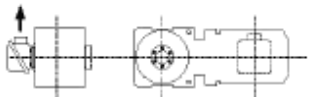	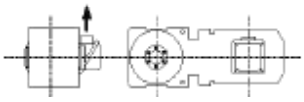	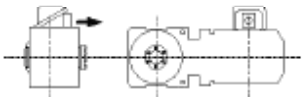	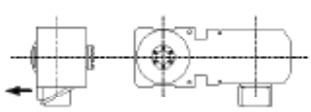

Table 2.27 - BBB4 Y4 Mounting

Cable Port Direction	Terminal Box Mounting Position			
	Left Side (N33) (Viewed from Gearbox Side)	**Right Side (N34)** (Viewed from Gearbox Side)	**Top Side (N35)** (Viewed from Gearbox Side)	**Bottom Side (N36)** (Viewed from Gearbox Side)
Type A (N3A)	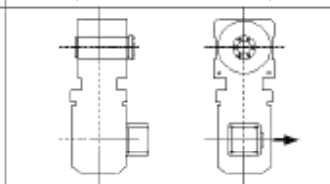	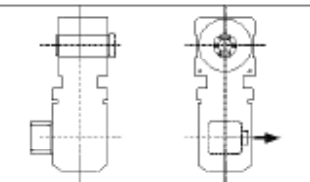	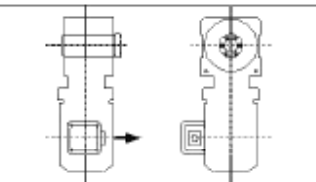	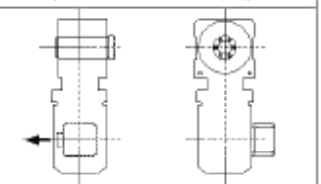
Type B (N3B)	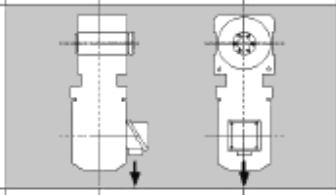	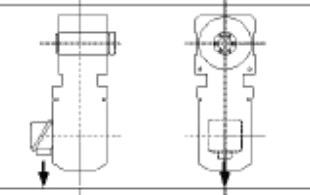	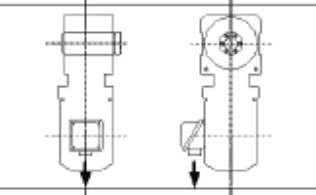	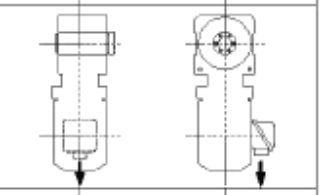
Type C (N3C)	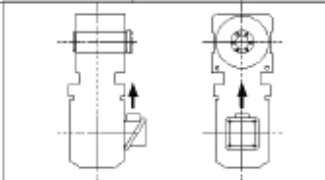	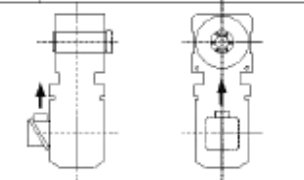	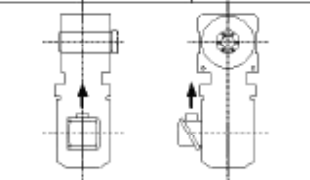	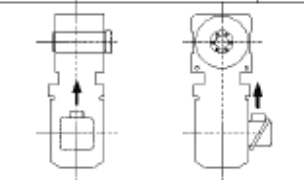
Type D (N3D)	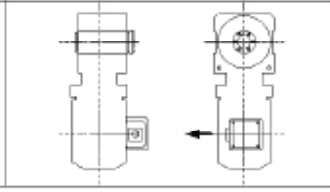	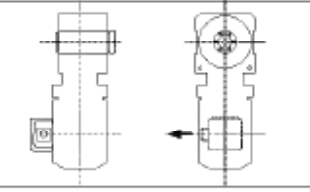	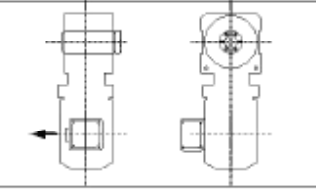	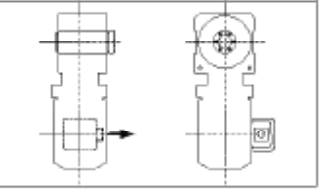

Special consideration must be given to terminal box location N35 in mounting position Y2 if the unit is oil lubricated. The conduit box may interfere with the unit's oil plumbing system. Another conduit box location should be selected if possible. If location N35 must be used, consult the factory.

NOTE: Default Terminal Box position for Gearmotors is N33/ N3B for all mounting positions (Y1 thru Y6), as highlighted in grey.

←: The arrow indicates direction of lead wire out of conduit box.

Motor Optional Conduit Box Location continued

Table 4.28 - BBB4 Y5 Mounting

Cable Port Direction	Terminal Box Mounting Position			
	Left Side (N33) (Viewed from Gearbox Side)	**Right Side (N34)** (Viewed from Gearbox Side)	**Top Side (N35)** (Viewed from Gearbox Side)	**Bottom Side (N36)** (Viewed from Gearbox Side)
Type A (N3A)	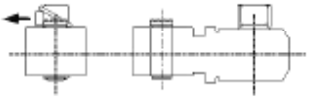	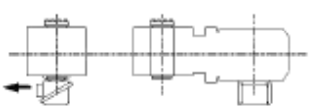	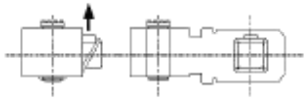	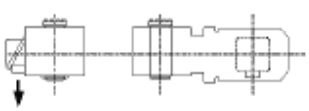
Type B (N3B)		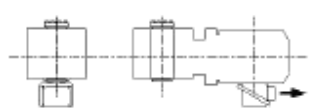	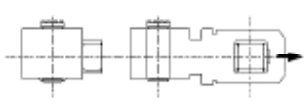	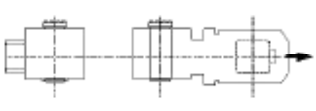
Type C (N3C)	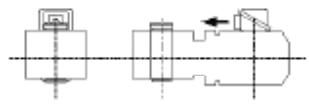	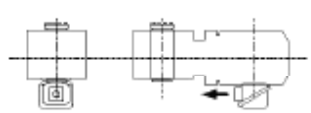	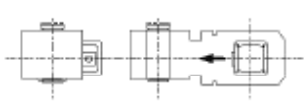	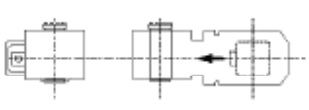
Type D (N3D)	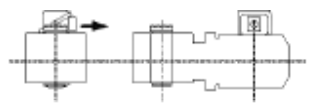	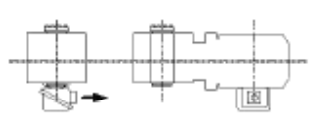	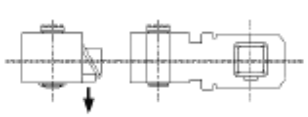	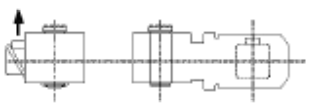

Table 4.29 - BBB4 Y6 Mounting

Cable Port Direction	Terminal Box Mounting Position			
	Left Side (N33) (Viewed from Gearbox Side)	**Right Side (N34)** (Viewed from Gearbox Side)	**Top Side (N35)** (Viewed from Gearbox Side)	**Bottom Side (N36)** (Viewed from Gearbox Side)
Type A (N3A)	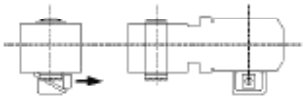	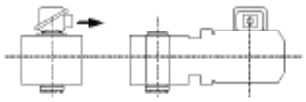	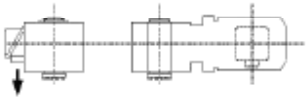	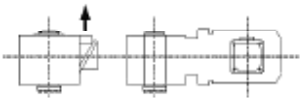
Type B (N3B)		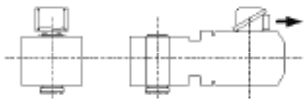	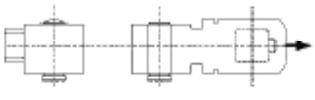	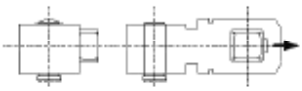
Type C (N3C)	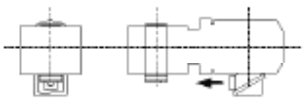	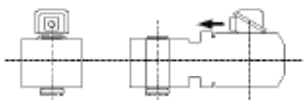	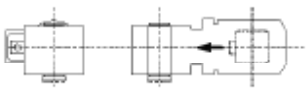	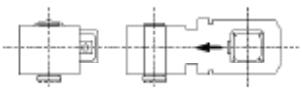
Type D (N3D)	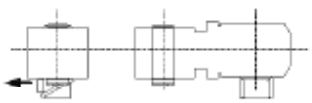	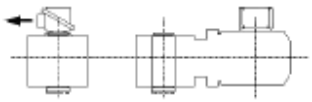	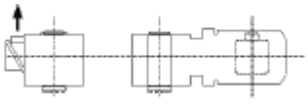	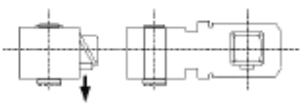

Special consideration must be given to terminal box location N35 in mounting position Y2 if the unit is oil lubricated. The conduit box may interfere with the unit's oil plumbing system. Another conduit box location should be selected if possible. If location N35 must be used, consult the factory.

NOTE: Default Terminal Box position for Gearmotors is N33/ N3B for all mounting positions (Y1 thru Y6), as highlighted in grey.

←: The arrow indicates direction of lead wire out of conduit box.

Motor Installation: Fan/Brake Cover Clearance Requirements

Required gearmotor clearance dimension FA and FB for installation to achieve best performance and proper maintenance.

Dimension FA: Clearance dimension necessary to remove fan cover or brake cover without removing the motor from the equipment.

Dimension FB: Minimum clearance to provide adequate ventilation.

Notes: 1. In some cases, it may be necessary to move the gearmotor to remove the fan cover or brake cover.

2. Dimension FB is the minimum clearance when the fan cover is up against a closed wall.

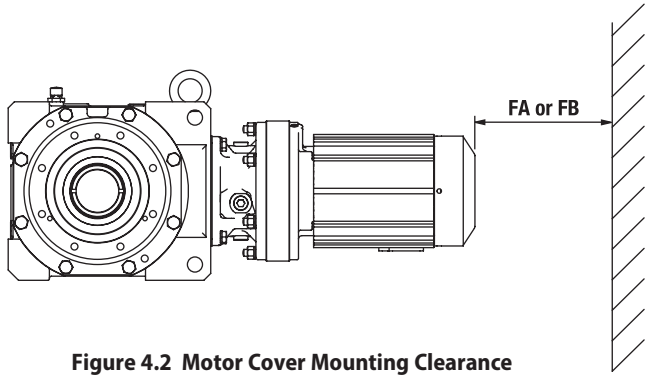

Figure 4.2 Motor Cover Mounting Clearance

Table 4.30a Motor Clearance Requirements for Standard IE1 motors (1/8 to 3/4 hp)

Units: inches (mm)

IE1 Motor			Standard 3-Phase Motor		3-Phase With Brake Motor	
Frame Size	HP x Pole	kW x Pole	FA	FB	FA	FB
VA-63S	1/8 x 4	0.1 x 4	-	-	2.0 (49)	-
VA-63M VA-63M	1/4 x 4 1/3 x 4	0.2 x 4 0.25 x 4	1.9 (48)	0.8 (20)	2.5 (61)	0.8 (20)
VA-71M	1/2 x 4	0.4 x 4	1.9 (48)	0.8 (20)	2.5 (61)	0.8 (20)
VA-80S	3/4 x 4	0.55 x 4	2.0 (49)	0.8 (20)	3.7 (93)	0.8 (20)

Table 4.30b Motor Clearance Requirements for AF - motors (1/8 to 3/4 hp)

Units: inches (mm)

IE1 Motor			Standard 3-Phase Motor		3-Phase With Brake Motor	
Frame Size	HP x Pole	kW x Pole	FA	FB	FA	FB
VA-63S VA-63M VA-63M	1/8 x 4 1/4 x 4 1/3 x 4	0.1 x 4 0.2 x 4 0.25 x 4	1.9 (48)	0.8 (20)	2.5 (61)	0.8 (20)
VA-71M	1/2 x 4	0.4 x 4	2 (49)	0.8 (20)	3.7 (93)	0.8 (20)
VA-80S	3/4 x 4	0.55 x 4	2.1 (52)	0.8 (20)	4.6 (115)	0.8 (20)

Table 4.30c Motor Clearance Requirements for EP motors (1 to 75 hp)

Units: inches (mm)

IE3 Motor			3-Phase Without Brake Motor		3-Phase Brake (B) Motor	
Frame Size	HP x Pole	kW x Pole	FA	FB	FA	FB
N-80M	1 x 4	0.75 x 4	2.3 (58)	0.8 (20)	4.8 (122)	0.8 (20)
N-90S N-90L	1.5 x 4 2 x 4	1.1 x 4 1.5 x 4	2.3 (59)	0.8 (20)	5.0 (128)	0.8 (20)
N-100L	3 x 4	2.2 x 4	2.4 (60)	0.8 (20)	5.4 (138)	0.8 (20)
N-112M N-132S	5 x 4 7.5 x 4	3.7 x 4 5.5 x 4	2.5 (63)	1.0 (25)	6.0 (153)	0.8 (20)
N-132M N-160M	10 x 4 15 x 4	7.5 x 4 11 x 4	3.3 (84)	1.2 (30)	7.4 (189)	1 (25)
N-160L	20 x 4	15 x 4	4.2 (107)	1.2 (30)	9.5 (242)	1.2 (30)
N-180MS N-180M N-180L	25 x 4 30 x 4 40 x 4	18.5 x 4 22 x 4 30 x 4	5.3 (134)	1.2 (30)	12.1 (308)	1.2 (30)
N-200L	50 x 4	37 x 4	5.3 (134)	1.2 (30)	13.6 (345)	1.2 (30)
N-200LL	60 x 4	45 x 4	6.7 (171)	1.2 (30)	14.8 (376)	1.2 (30)

Motor Conduit Box Details

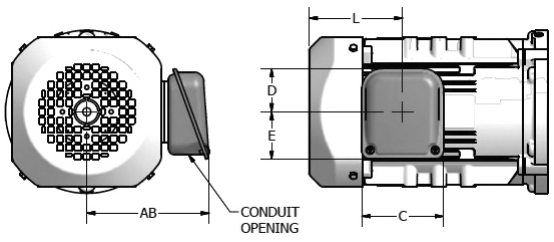

Figure 4.3 Indoor Duty (Optional) Box

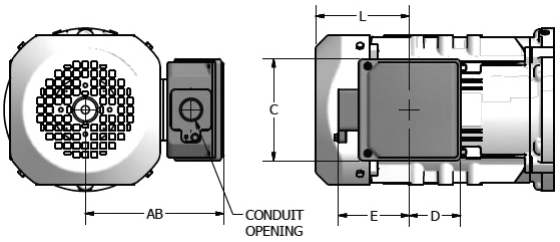

Figure 4.4 Global EP.NA and Outdoor Duty Box

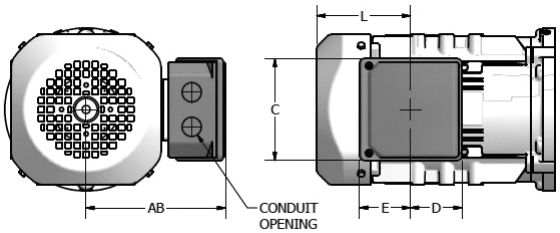

Figure 4.5 Global IE3 CE Box

Table 4.31 Conduit Box Information

Units: inches *(mm)*

Frame Size	Duty Rating	General Dimensions				Without Brake		With Brake		Conduit Opening	Material
		AB	C	D	E	Availability	L	Availability	L		
V-63S	Indoor Duty (Optional)	4.11 (105)	3.35 (85)	2.09 (53)	1.69 (43)	yes	1.38 (35)	CF(1)	2.76 (70)	Ø0.90 (Ø23)	Steel
	Indoor Duty Brake (Optional)	4.32 (110)	3.94 (100)	2.29 (58)	2.10 (53)			yes		Ø0.90 (Ø23)	Steel
	Outdoor Duty (Optional)	4.98 (127)	3.94 (100)	2.42 (62)	2.76 (70)			yes		NPT1/2(2)	Steel
	Global	4.63 (118)	4.09 (104)	2.24 (57)	2.16 (55)			yes		NPT1/2	Al Diecast
	Global CE	4.63 (118)	4.09 (104)	2.24 (57)	2.16 (55)			yes		M16, M25	Al Diecast
VA-63S V-63M VA-63M V-71M	Indoor Duty (Optional)	4.11 (105)	3.35 (85)	2.09 (53)	1.69 (43)	yes	2.32 (59)	CF(1)	3.58 (91)	Ø0.90 (Ø23)	Steel
	Indoor Duty Brake (Optional)	4.32 (110)	3.94 (100)	2.29 (58)	2.10 (53)			yes		Ø0.90 (Ø23)	Steel
	Outdoor Duty (Optional)	4.98 (127)	3.94 (100)	2.42 (62)	2.76 (70)			yes		NPT1/2(2)	Steel
	Global	4.63 (118)	4.09 (104)	2.24 (57)	2.16 (55)			yes		NPT1/2	Al Diecast
	Global CE	4.63 (118)	4.09 (104)	2.24 (57)	2.16 (55)			yes		M16, M25	Al Diecast
VA-71M V-80S	Indoor Duty (Optional)	4.69 (119)	3.35 (85)	1.72 (44)	2.04 (52)	yes	3.82 (97)	CF(1)	5.51 (140)	Ø0.90 (Ø23)	Steel
	Indoor Duty Brake (Optional)	5.68 (144)	4.80 (122)	2.60 (66)	2.84 (72)			yes		Ø0.90 (Ø23)	Steel
	Outdoor Duty (Optional)	5.55 (141)	3.94 (100)	2.20 (56)	2.95 (75)			yes		G3/4(2)	Steel
	Global	5.67 (144)	4.92 (125)	2.50 (64)	3.43 (87)			yes		NPT3/4(2)	Al Diecast
	Global CE	5.71 (145)	4.92 (125)	2.50 (64)	2.47 (63)			yes		2 - M25	Al Diecast
VA-80S	Indoor Duty (Optional)	4.88 (124)	3.35 (85)	1.72 (44)	2.04 (52)	yes	3.94 (100)	CF(1)	6.38 (162)	Ø0.90 (Ø23)	Steel
	Indoor Duty Brake (Optional)	5.87 (149)	4.80 (122)	2.60 (66)	2.84 (72)			yes		Ø0.90 (Ø23)	Steel
	Outdoor Duty (Optional)	5.75 (146)	3.94 (100)	2.20 (56)	2.95 (75)			yes		G3/4(2)	Steel
	Global	5.86 (149)	4.92 (125)	2.50 (64)	3.43 (87)			yes		NPT3/4(2)	Al Diecast
	Global CE	5.91 (150)	4.92 (125)	2.50 (64)	2.47 (63)			yes		2 - M25	Al Diecast

Table 4.31 Conduit Box Information (continued)

Units: inches *(mm)*

Frame Size	Duty Rating	General Dimensions				Without Brake		With Brake		Conduit Opening	Material
		AB	C	D	E	Availability	L	Availability	L		
N-80M	Indoor Duty (Optional)	4.85 (123)	3.35 (85)	1.72 (44)	2.04 (52)	Yes	3.82 (97)	CF(1)	6.32 (161)	Ø0.90 (Ø23)	Steel
	Indoor Duty Brake (Optional)	5.99 (152)	4.80 (122)	2.60 (66)	2.84 (72)			Yes		Ø0.90 (Ø23)	Steel
	Outdoor Duty (Optional)	5.87 (149)	3.94 (100)	2.20 (56)	2.95 (75)			Yes		G3/4(2)	Steel
	Global EP.NA	5.98 (152)	4.92 (125)	2.50 (64)	3.43 (87)			Yes		NPT3/4(2)	Al Diecast
	Global IE3 CE	6.02 (153)	4.92 (125)	2.50 (64)	2.47 (63)			Yes		2 - M25	Al Diecast
N-90S N-90L	Indoor Duty (Optional)	5.03 (128)	3.35 (85)	1.72 (44)	2.04 (52)	Yes	3.82 (97)	CF(1)	6.56 (167)	Ø0.90 (Ø23)	Steel
	Indoor Duty Brake (Optional)	6.17 (157)	4.80 (122)	2.60 (66)	2.84 (72)			Yes		Ø0.90 (Ø23)	Steel
	Outdoor Duty (Optional)	6.04 (154)	3.94 (100)	2.20 (56)	2.95 (75)			Yes		G3/4(2)	Steel
	Global EP.NA	6.16 (156)	4.92 (125)	2.50 (64)	3.43 (87)			Yes		NPT3/4(2)	Al Diecast
	Global IE3 CE	6.20 (158)	4.92 (125)	2.50 (64)	2.47 (63)			Yes		2 - M25	Al Diecast
N-100L N-112S	Indoor Duty (Optional)	5.93 (151)	3.94 (100)	2.09 (53)	2.29 (58)	Yes	4.53 (115)	CF(1)	7.60 (193)	Ø0.90 (Ø23)	Steel
	Indoor Duty Brake (Optional)	6.72 (171)	4.80 (122)	2.60 (66)	2.84 (72)			Yes		Ø0.90 (Ø23)	Steel
	Outdoor Duty (Optional)	7.21 (183)	4.84 (123)	2.52 (64)	3.43 (87)			Yes		G3/4(2)	Steel
	Global EP.NA	6.71 (170)	4.92 (125)	2.50 (64)	3.43 (87)			Yes		NPT3/4(2)	Al Diecast
	Global IE3 CE	6.75 (172)	4.92 (125)	2.50 (64)	2.47 (63)			Yes		2 - M25	Al Diecast
N-112M	Indoor Duty (Optional)	6.56 (167)	3.94 (100)	2.09 (53)	2.29 (58)	Yes	4.65 (118)	CF(1)	8.21 (209)	Ø0.90 (Ø23)	Steel
	Indoor Duty Brake (Optional)	7.35 (187)	4.80 (122)	2.60 (66)	2.84 (72)			Yes		Ø0.90 (Ø23)	Steel
	Outdoor Duty (Optional)	7.84 (199)	4.84 (123)	2.52 (64)	3.43 (87)			Yes		G3/4(2)	Steel
	Global EP.NA	7.34 (186)	4.92 (125)	2.50 (64)	3.43 (87)			Yes		NPT3/4(2)	Al Diecast
	Global IE3 CE	7.38 (188)	4.92 (125)	2.50 (64)	2.47 (63)			Yes		2 - M25	Al Diecast
N-132S	Indoor Duty (Optional)	6.56 (167)	3.94 (100)	2.09 (53)	2.29 (58)	Yes	4.65 (118)	CF(1)	8.21 (209)	Ø0.90 (Ø23)	Steel
	Indoor Duty Brake (Optional)	7.35 (187)	4.80 (122)	2.60 (66)	2.84 (72)			Yes		Ø0.90 (Ø23)	Steel
	Outdoor Duty (Optional)	7.84 (199)	4.84 (123)	2.52 (64)	3.43 (87)			Yes		G1(2)	Steel
	Global EP.NA	7.34 (186)	4.92 (125)	2.50 (64)	3.43 (87)			Yes		NPT1(2)	Al Diecast
	Global IE3 CE	7.38 (188)	4.92 (125)	2.50 (64)	2.47 (63)			Yes		2 - M25	Al Diecast
N-132M	Indoor Duty (Optional)	7.98 (203)	4.80 (122)	2.60 (66)	2.84 (72)	Yes	5.43 (138)	Yes	9.57 (243)	Ø1.69 (Ø43)	Steel
	Outdoor Duty (Optional)	9.26 (235)	6.06 (154)	3.11 (79)	4.13 (105)					G1(2)	Steel
	Global EP.NA	9.04 (230)	6.69 (170)	3.40 (86)	4.43 (113)					NPT1(2)	Al Diecast
	Global IE3 CE	9.04 (230)	6.69 (170)	3.40 (86)	3.51 (89)					2-M32	Al Diecast

Note: (1) For "Available?" identified with "CF", please consult factory for brake configuration supporting this conduit box.

Table 4.31 Conduit Box Information (continued)

Frame Size	Duty Rating	General Dimensions				Without Brake		With Brake		Conduit Opening	Material
		AB	C	D	E	Availability	L	Availability	L		
N-160M	Indoor Duty (Optional)	7.98 (203)	4.80 (122)	2.60 (66)	2.84 (72)	Yes	5.43 (138)	Yes	9.57 (243)	Ø1.69 (Ø43)	Steel
	Outdoor Duty (Optional)	9.26 (235)	6.06 (154)	3.11 (79)	4.13 (105)					G1-1/4(2)	Steel
	Global EP.NA	9.04 (230)	6.69 (170)	3.40 (86)	4.43 (113)					NPT1-1/4(2)	Al Diecast
	Global IE3 CE	9.04 (230)	6.69 (170)	3.40 (86)	3.51 (89)					2-M32	Al Diecast
N-160L	Indoor Duty (Optional)	9.20 (234)	4.80 (122)	2.60 (66)	2.84 (72)	Yes	7.01 (178)	No	12.30 (313)	Ø1.69 (Ø43)	Steel
	Indoor Duty Brake (Optional)	10.16 (258)	6.54 (166)	3.48 (88)	3.89 (99)			Yes		Ø1.69 (Ø43)	Steel
	Outdoor Duty (Optional)	10.48 (266)	6.06 (154)	3.11 (79)	4.13 (105)			Yes		G1-1/4(2)	Steel
	Global EP.NA	10.26 (261)	6.69 (170)	3.40 (86)	4.43 (113)			Yes		NPT1-1/4(2)	Al Diecast
	Global IE3 CE	10.26 (261)	6.69 (170)	3.40 (86)	3.51 (89)			Yes		2-M32	Al Diecast
N-180MS N-180M	Indoor Duty (Optional)	11.69 (297)	6.54 (166)	3.48 (88)	3.89 (99)	Yes	9.06 (230)	Yes	15.91 (404)	Ø1.93 (Ø49)	Steel
	Outdoor Duty (Optional)	14.08 (358)	7.56 (192)	4.53 (115)	6.89 (175)					G1-1/4(2)	Cast Iron
	Global EP.NA	13.39 (340)	9.02 (229)	4.38 (111)	5.47 (139)					NPT1-1/4(2)	Cast Iron
	Global IE3 CE	13.39 (340)	9.02 (229)	4.38 (111)	4.43 (113)					2 - M40	Cast Iron
N-180L N-200L	Indoor Duty (Optional)	11.69 (297)	6.54 (166)	3.48 (88)	3.89 (99)	Yes	9.06 (230)	Yes	15.91 (404)	Ø1.93 (Ø49)	Steel
	Outdoor Duty (Optional)	14.08 (358)	7.56 (192)	4.53 (115)	6.89 (175)					G2(2)	Cast Iron
	Global EP.NA	13.39 (340)	9.02 (229)	4.38 (111)	5.47 (139)					NPT2(2)	Cast Iron
	Global IE3 CE	13.39 (340)	9.02 (229)	4.38 (111)	4.43 (113)					2 - M40	Cast Iron
N-200LL N-225S	Indoor Duty (Optional)	16.24 (413)	9.45 (240)	4.19 (106)	6.30 (160)	Yes	16.81 (427)			Ø3.03 (Ø77)	Steel
	Outdoor Duty (Optional)	19.03 (483)	10.16 (258)	5.28 (134)	11.50 (292)					G2-1/2(2)	Cast Iron
	Global EP.NA	16.54 (420)	10.63 (270)	5.14 (131)	6.22 (158)					NPT3(2)	Cast Iron
	Global IE3 CE	16.54 (420)	10.63 (270)	5.14 (131)	5.13 (130)					2 - M63	Cast Iron

(1) Default thread option shown. Alternate thread options available. Please consult factory for alternate conduit thread options.

Sold & Serviced By:
ELECTROMATE
Toll Free Phone (877) SERVO98
www.electromate.com
sales@electromate.com

Fractional Motor Performance Data - 60Hz Operation

Table 4.32a Standard Three Phase, 230/460V, 60Hz, 1800 RPM Synchronous Speed, TEFC - UL

Motor Capacity		Frame Size	Full Load (A)			Current				Starting Torque % of FL	Breakdown Torque % of FL	Nominal Efficiency %	Power Factor %	NEMA Code Letter
			Rated RPM	Torque		Full Load		No Load % of FL	Starting % of FL					
HP	kW			in-lbs	N-m	230V	460V							
1/8**	0.1	V-63S	1730	4.55	0.514	0.66	0.33	86.1	424	326	308	63.3	60.0	K
1/4	0.2	V-63M	1730	9.10	1.03	1.12	0.56	79.6	464	300	287	69.2	65.1	K
1/3	0.25	V-63M	1700	12.2	1.38	1.24	0.62	72.0	419	237	226	70.1	72.0	G
1/2	0.4	V-71M	1750	18.0	2.03	2.15	1.08	77.7	456	295	276	71.5	65.4	J
3/4	0.55	V-80S	1720	27.5	3.11	2.47	1.24	68.4	500	266	261	76.5	73.1	H

** 1/8 HP is TENV

Table 4.32b Standard Three Phase, 240/480V, 60Hz, 1800 RPM Synchronous Speed, TEFC - UL

Motor Capacity		Frame Size	Full Load (A)			Current				Starting Torque % of FL	Breakdown Torque % of FL	Nominal Efficiency %	Power Factor %	NEMA Code Letter
			Rated RPM	Torque		Full Load		No Load % of FL	Starting % of FL					
HP	kW			in-lbs	N-m	240V	480V							
1/8**	0.1	V-63S	1740	4.53	0.512	0.69	0.35	87.4	429	364	341	61.9	56.3	L
1/4	0.2	V-63M	1740	9.05	1.02	1.16	0.58	83.6	466	335	317	68.2	61	K
1/3	0.25	V-63M	1710	12.3	1.39	1.27	0.63	77.0	429	268	238	69.8	68.1	H
1/2	0.4	V-71M	1750	18.0	2.04	2.27	1.13	83.2	460	328	303	70.4	60.4	K
3/4	0.55	V-80S	1730	27.3	3.09	2.52	1.26	73.4	508	294	285	76.0	69.2	H

** 1/8 HP is TENV

Table 4.32c Non-Standard Three Phase, 230/460V, 60Hz, 1800 RPM Synchronous Speed, TEFC - CSA

Motor Capacity		Frame Size	Full Load (A)			Current				Starting Torque % of FL	Breakdown Torque % of FL	Nominal Efficiency %	Power Factor %	NEMA Code Letter
			Rated RPM	Torque		Full Load		No Load % of FL	Starting % of FL					
HP	kW			in-lbs	N-m	230V	460V							
1/8**	0.1	V-63S	1730	4.55	0.514	0.66	0.33	86.1	424	326	308	63.3	60.0	K
1/4	0.2	V-63M	1730	9.10	1.03	1.12	0.56	79.6	464	300	287	69.2	65.1	K
1/3	0.25	V-63M	1700	12.2	1.38	1.24	0.62	72.0	419	237	226	70.1	72.0	G
1/2	0.4	V-71M	1750	18.0	2.03	2.15	1.08	77.7	456	295	276	71.5	65.4	J
3/4	0.55	V-80S	1720	27.5	3.11	2.47	1.24	68.4	500	266	261	76.5	73.1	H

** 1/8 HP is TENV

Table 4.32d Non-Standard Three Phase, 575V, 60Hz, 1800 RPM Synchronous Speed, TEFC - CSA

Motor Capacity		Frame Size	Full Load (A)			Current				Starting Torque % of FL	Breakdown Torque % of FL	Nominal Efficiency %	Power Factor %	NEMA Code Letter
			Rated RPM	Torque		Full Load		No Load % of FL	Starting % of FL					
HP	kW			in-lbs	N-m	575V								
1/8**	0.1	V-63S	1720	4.58	0.518	0.28		91.8	464	376	391	65.5	54.1	M
1/4	0.2	V-63M	1730	9.10	1.03	0.48		85.4	458	316	340	69.4	60.1	K
1/3	0.25	V-63M	1710	12.2	1.38	0.52		78.8	423	250	270	71.3	67.5	H
1/2	0.4	V-71M	1700	18.5	2.09	0.79		75.8	468	309	300	75.2	63.1	J
3/4	0.55	V-80S	1700	27.8	3.14	1.00		74.0	530	260	268	75.4	71.4	H

** 1/8 HP is TENV

Fractional AF-Motor (AV) Performance Data - 60Hz Operation

Table 4.33a Three Phase, 230/460V, 60Hz, 1800 RPM Synchronous Speed, 10:1 Constant Torque Speed Range TEFC

Motor Capacity		Frame Size	Wiring	Full Load Torque		Voltage V	60 Hz Current Amp	Speed RPM	Voltage V	6 Hz Current Amp	Speed RPM	No Load Current @ 60 Hz
HP	kW			in-lbs	N-m							
1/8	0.1	VA-63S	High Voltage	4.77	*0.54*	460	0.49	1770	68	0.37	125	0.46
			Low Voltage			230	0.98		34	0.74		0.92
1/4	0.2	VA-63M	High Voltage	9.6	*1.08*	460	0.91	1765	68	0.79	125	0.87
			Low Voltage			230	1.8		34	1.6		1.74
1/3	0.25	VA-63M	High Voltage	12	*1.36*	460	0.94	1755	78	0.87	125	0.87
			Low Voltage			230	1.9		34	1.7		1.74
1/2	0.4	VA-71M	High Voltage	19.2	*2.17*	460	1.3	1750	70	1.1	115	1.21
			Low Voltage			230	2.6		35	2.3		2.42
3/4	0.55	VA-80S	High Voltage	26.3	2.97	460	1.7	1760	62	1.6	125	1.54
			Low Voltage			230	3.3		31	3.1		3.07

Table 4.33b Three Phase, 230/460V, 60Hz, 1800 RPM Synchronous Speed, 10:1 Constant Torque Speed Range TEFC - CSA

Motor Capacity		Frame Size	Wiring	Full Load Torque		Voltage V	60 Hz Current Amp	Speed RPM	Voltage V	6 Hz Current Amp	Speed RPM	No Load Current @ 60 Hz
HP	kW			in-lbs	N-m							
1/8	0.1	VA-63S	High Voltage	*4.77*	*0.54*	460	0.49	1770	68	0.37	125	0.46
			Low Voltage			230	0.98		34	0.74		0.92
1/4	0.2	VA-63M	High Voltage	*9.57*	*1.08*	460	0.91	1765	68	0.79	125	0.87
			Low Voltage			230	1.8		34	1.6		1.74
1/3	0.25	VA-63M	High Voltage	*12.0*	*1.36*	460	0.94	1755	78	0.87	125	0.87
			Low Voltage			230	1.9		34	1.7		1.74
1/2	0.4	VA-71M	High Voltage	*19.3*	*2.17*	460	1.3	1750	70	1.1	115	1.21
			Low Voltage			230	2.6		35	2.3		2.42
3/4	0.55	VA-80S	High Voltage	26.3	2.97	460	1.7	1765	62	1.5	145	1.54
			Low Voltage			230	3.3		31	2.9		3.08

Table 4.33c Three Phase, 575V, 60Hz, 1800 RPM Synchronous Speed, 10:1 Constant Torque Speed Range TEFC - CSA Approved

Motor Capacity		Frame Size	Full Load Torque		Voltage V	60 Hz Current Amp	Speed RPM	Voltage V	6 Hz Current Amp	Speed RPM	No Load Current @ 60 Hz
HP	kW		in-lbs	N-m							
1/8	0.1	VA-63S	*4.77*	*0.54*	575	0.4	1770	85	0.3	130	0.4
1/4	0.2	VA-63M	*9.57*	*1.08*	575	0.7	1765	77	0.5	85	0.62
1/3	0.25	VA-63M	*12.0*	*1.36*	575	0.7	1755	95	0.7	120	0.62
1/2	0.4	VA-71M	*19.4*	*2.17*	575	0.94	1745	88	0.86	110	0.86
3/4	0.55	VA-80S	26.3	2.97	575	1.3	1765	76	1.1	140	0.98

Motor Performance Data - EP.NA Motor, 60Hz Operation

Table 4.34 Three Phase, 230/460v, 60Hz, 1800 RPM Synchronous Speed, TEFC

Motor Capacity		Frame Size	Full Load (A)			Current				Starting Torque % of FL	Breakdown Torque % of FL	Nominal Efficiency %	Power Factor %	NEMA Code Letter
			Rated RPM	Torque		Full Load		No Load % of FL	Starting % of FL					
HP	kW			in-lbs	N-m	230V	460V							
1	0.75	N-80M	1730	36.6	4.14	3.06	1.53	62.0	692	343	403	85.5	72.0	K
1.5	1.1	N-90S	1730	53.7	6.07	4.15	2.08	52.1	659	277	341	86.5	76.5	J
2	1.5	N-90L	1730	73.2	8.28	5.61	2.80	52.7	694	284	356	86.5	77.2	J
3	2.2	N-100L	1740	107	12.1	7.66	3.83	47.5	824	317	389	89.5	80.7	K
5	3.7	N-112M	1750	179	20.2	12.3	6.17	44.5	821	244	379	89.5	83.9	K
7.5	5.5	N-132S	1760	264	29.8	17.8	8.90	42.9	1000	290	461	91.7	84.2	L
10	7.5	N-132M	1760	360	40.7	24.4	12.2	36.1	606	193	277	91.7	84.1	G
15	11	N-160M	1770	525	59.3	38.4	19.2	48.0	736	274	369	92.4	77.8	J
20	15	N-160L	1770	716	80.9	47.7	23.8	36.5	828	227	351	93.0	85.0	J
25	18.5	N-180MS	1780	878	99.2	56.9	28.5	31.7	805	245	308	93.6	86.4	J
30	22	N-180M	1780	1040	118	67.4	33.7	28.8	673	206	258	93.6	87.1	G
40	30	N-180L	1780	1420	161	91.6	45.8	29.5	792	242	295	94.1	87.0	J
50	37	N-200L	1780	1760	198	113	56.5	31.7	890	276	328	94.5	86.7	K
60	45	N-200LL	1780	2140	241	138	69.0	37.7	962	308	393	95.0	86.3	K

Table 4.35 Three Phase, 240/480V, 60Hz, 1800 RPM Synchronous Speed, TEFC

Motor Capacity		Frame Size	Full Load (A)			Current				Starting Torque % of FL	Breakdown Torque % of FL	Nominal Efficiency %	Power Factor %	NEMA Code Letter
			Rated RPM	Torque		Full Load		No Load % of FL	Starting % of FL					
HP	kW			in-lbs	N-m	240V	480V							
1	0.75	N-80M	1740	36.4	4.12	3.05	1.52	66.2	723	380	439	85.5	69.2	L
1.5	1.1	N-90S	1740	53.4	6.04	4.09	2.05	56.6	704	310	375	86.5	74.1	J
2	1.5	N-90L	1730	73.2	8.28	5.54	2.77	57.8	722	316	387	86.5	74.5	K
3	2.2	N-100L	1750	106	12.0	7.53	3.77	52.1	911	352	446	89.5	78.4	L
5	3.7	N-112M	1760	178	20.1	12.1	6.06	49.3	886	268	421	89.5	81.7	K
7.5	5.5	N-132S	1760	264	29.8	17.5	8.76	47.6	1060	321	506	91.7	82.0	M
10	7.5	N-132M	1760	360	40.7	23.8	11.9	40.3	652	212	308	91.7	82.2	H
15	11	N-160M	1770	525	59.3	38.7	19.3	54.0	760	305	405	92.4	74.0	K
20	15	N-160L	1770	716	80.9	46.5	23.2	41.0	893	251	387	93.0	83.3	K
25	18.5	N-180MS	1780	878	99.2	55.1	27.6	35.2	881	268	340	93.6	85.3	K
30	22	N-180M	1780	1040	118	64.9	32.4	29.9	748	224	285	93.6	86.5	H
40	30	N-180L	1780	1420	161	88.8	44.4	33.3	867	266	326	94.1	85.9	J
50	37	N-200L	1780	1760	198	110.0	55.1	35.7	968	304	361	94.5	85.2	K
60	45	N-200LL	1780	2140	241	135.0	67.6	42.0	1050	329	430	95.0	84.4	L

Motor Performance Data - EP.NA Motor, 60Hz Operation (continued)

Table 4.36 Three Phase, 575V, 60Hz, 1800 RPM Synchronous Speed, TEFC

Motor Capacity		Frame Size	Full Load (A)			Current			Starting Torque % of FL	Breakdown Torque % of FL	Nominal Efficiency %	Power Factor %	NEMA Code Letter
			Rated RPM	Torque		Full Load	No Load % of FL	Starting % of FL					
HP	kW			in-lbs	N-m	575V							
1	0.75	N-80M	1740	36.4	4.12	1.36	72.7	768	430	500	85.5	64.4	M
1.5	1.1	N-90S	1740	53.4	6.04	1.69	57.8	743	313	386	86.5	74.5	K
2	1.5	N-90L	1730	73.2	8.28	2.22	52.3	685	272	341	86.5	77.9	J
3	2.2	N-100L	1740	107	12.1	3.05	47.2	839	322	404	89.5	80.8	K
5	3.7	N-112M	1750	179	20.2	4.86	42.0	798	230	355	89.5	84.9	J
7.5	5.5	N-132S	1760	264	29.8	7.12	42.5	957	263	429	91.7	84.7	L
10	7.5	N-132M	1760	360	40.7	10.1	43.9	704	230	332	91.7	81.3	H
15	11	N-160M	1760	528	59.7	14.5	41.7	710	237	331	92.4	82.3	H
20	15	N-160L	1770	716	80.9	19.4	41.1	915	257	396	93.0	83.3	K
25	18.5	N-180MS	1780	878	99.2	22.8	35.2	916	276	350	93.6	86.1	K
30	22	N-180M	1780	1040	118	26.8	29.9	779	230	293	93.6	87.2	H
40	30	N-180L	1780	1420	161	37.0	31.5	857	263	321	94.1	86.1	J
50	37	N-200L	1780	1760	198	45.5	36.0	954	297	352	94.5	85.9	K
60	45	N-200LL	1780	2140	241	55.7	40.5	1040	324	422	95.0	85.4	L

Sold & Serviced By:
ELECTROMATE
Toll Free Phone (877) SERVO98
www.electromate.com
sales@electromate.com

Motor Performance Data - CE Motor, 50Hz Operation

Table 4.37a Three Phase, 220/380V, 50Hz, 1500 RPM Synchronous Speed, TEFC

Motor Capacity		Frame Size	Full Load (A)			Current				Starting Torque % of FL	Breakdown Torque % of FL	Nominal Efficiency %	Power Factor %	NEMA Code Letter
			Rated RPM	Torque		Full Load		No Load % of FL	Starting % of FL					
HP	kW			in-lbs	N-m	220V	380V							
1/8**	0.1	V-63S	1400	6.03	0.682	0.6	0.35	78.3	371	230	226	63.3	69.1	H
1/4	0.2	V-63M	1390	12.2	1.37	1.05	0.61	71.5	361	206	206	67.6	73.7	F
1/3	0.25	V-63M	1360	15.5	1.75	1.22	0.71	61.4	338	195	181	69.1	77.8	E
1/2	0.4	V-71M	1410	24.0	2.71	2.06	1.19	68.3	353	201	204	69.7	73.5	F
3/4	0.55	V-80S	1400	33.2	3.75	2.45	1.42	58.5	373	206	196	73.4	80.2	E
1	0.75	N-80M	1430	44.3	5.01	3.46	2.00	66.2	579	383	402	84.7	67.9	K
1.5	1.1	N-90S	1430	65.0	7.35	4.49	2.59	54.4	606	296	343	85.4	75.1	J
2	1.5	N-90L	1420	89.2	10.1	6.10	3.52	54.9	578	304	338	85.4	75.5	H
3	2.2	N-100L	1440	129	14.6	8.58	4.96	52.2	758	344	418	88.6	78.0	K
4	3.0	N-112S	1430	177	20.0	11.3	6.50	45.6	676	316	365	87.7	80.8	J
5	3.7	N-112M	1460	214	24.2	13.5	7.80	48.5	743	266	378	89.6	81.2	J
5.5	4.0	N-112M	1450	233	26.3	14.4	8.30	45.2	692	266	378	88.9	82.9	J
7.5	5.5	N-132S	1460	318	36.0	-	11.5	49.6	907	316	471	90.6	80.7	L
10	7.5	N-132M	1460	434	49.1	-	15.8	44.9	590	213	315	90.8	79.6	H
15	11	N-160M	1460	636	71.9	-	22.3	38.5	551	200	283	91.4	81.6	G
20	15	N-160L	1470	862	97.4	-	30.5	43.1	619	230	304	92.6	80.6	H
25	18.5	N-180MS	1480	1060	119	-	35.6	36.9	735	245	338	94.0	83.5	J
30	22	N-180M	1480	1260	142	-	41.9	31.4	624	206	284	93.5	85.4	G

** 1/8 HP is TENV

Table 4.37b Three Phase, 230/400V, 50Hz, 1500 RPM Synchronous Speed, TEFC

Motor Capacity		Frame Size	Full Load (A)			Current				Starting Torque % of FL	Breakdown Torque % of FL	Nominal Efficiency %	Power Factor %	NEMA Code Letter
			Rated RPM	Torque		Full Load		No Load % of FL	Starting % of FL					
HP	kW			in-lbs	N-m	230V	400V							
1/8**	0.1	V-63S	1420	5.95	0.672	0.62	0.36	83.6	361	261	255	62.1	64.9	H
1/4	0.2	V-63M	1410	12.0	1.35	1.08	0.62	77.3	371	236	233	67.1	69.5	G
1/3	0.25	V-63M	1380	15.3	1.73	1.22	0.7	68.4	371	225	205	69.4	74.2	F
1/2	0.4	V-71M	1420	23.8	2.69	2.13	1.23	75.6	366	229	229	68.5	68.7	G
3/4	0.55	V-80S	1410	32.9	3.72	2.45	1.41	65.2	390	225	219	73.6	76.7	F
1	0.75	N-80M	1440	44.0	4.97	3.54	2.05	72.3	613	423	446	84.6	62.7	L
1.5	1.1	N-90S	1440	64.5	7.29	4.50	2.60	61.4	640	336	387	85.6	71.1	K
2	1.5	N-90L	1430	88.6	10.0	6.17	3.56	62.2	601	338	375	85.8	72.3	J
3	2.2	N-100L	1450	128	14.5	8.56	4.95	60.2	798	382	465	88.7	74.1	L
4	3.0	N-112S	1440	176	19.9	11.2	6.45	53.2	727	352	419	87.9	76.9	K
5	3.7	N-112M	1460	214	24.2	13.7	7.90	56.0	766	294	420	89.0	77.5	K
5.5	4.0	N-112M	1460	231	26.2	14.4	8.30	53.4	733	273	388	89.1	78.8	K
7.5	5.5	N-132S	1460	318	36.0	-	11.6	56.6	937	351	524	90.6	76.2	M
10	7.5	N-132M	1460	434	49.1	-	16.0	51.9	704	206	350	91.2	75.5	K

** 1/8 HP is TENV

Table continued on next page.

Motor Performance Data - IE3 CE Motor, 50Hz Operation (continued)

Table 4.37b continued... Three Phase, 230/400V, 50Hz, 1500 RPM Synchronous Speed, TEFC

Motor Capacity		Frame Size	Full Load (A)			Current				Starting Torque % of FL	Breakdown Torque % of FL	Nominal Efficiency %	Power Factor %	NEMA Code Letter
			Rated RPM	Torque		Full Load		No Load % of FL	Starting % of FL					
HP	kW			in-lbs	N-m	230V	400V							
15	11	N-160M	1470	632	71.5	-	22.2	54.4	635	257	378	91.5	73.0	J
20	15	N-160L	1480	856	96.8	-	30.6	50.6	647	256	338	92.5	76.3	J
25	18.5	N-180MS	1480	1060	119	-	35.4	43.8	777	272	375	93.9	80.1	K
30	22	N-180M	1480	1260	142	-	40.9	37.9	673	227	314	93.8	82.7	H
40	30	N-180L	1480	1710	194	-	59.1	47.3	730	265	382	94.0	78.2	J
50	37	N-200L	1480	2110	239	-	69.5	40.8	753	266	361	94.1	81.4	J
60	45	N-200LL	1480	2570	290	-	82.5	41.7	845	317	411	94.6	83.5	K

Table 4.38 Three Phase, 240/415V, 50Hz, 1500 RPM Synchronous Speed, TEFC

Motor Capacity		Frame Size	Full Load (A)			Current				Starting Torque % of FL	Breakdown Torque % of FL	Nominal Efficiency %	Power Factor %	NEMA Code Letter
			Rated RPM	Torque		Full Load		No Load % of FL	Starting % of FL					
HP	kW			in-lbs	N-m	240V	415V							
1/8**	0.1	V-63S	1420	5.95	0.672	0.65	0.37	88.1	378	286	277	60.9	60.9	J
1/4	0.2	V-63M	1410	12.0	1.35	1.1	0.64	80.9	375	260	253	66.4	65.7	H
1/3	0.25	V-63M	1390	15.2	1.72	1.23	0.71	73.0	380	247	223	69.5	70.6	G
1/2	0.4	V-71M	1430	23.6	2.67	2.23	1.29	80.6	364	250	247	67.0	64.4	H
3/4	0.55	V-80S	1420	32.7	3.7	2.46	1.43	70.6	413	248	237	73.6	73.1	G
1	0.75	N-80M	1450	43.7	4.94	3.65	2.11	76.3	600	461	484	84.1	59.4	L
1.5	1.1	N-90S	1440	64.5	7.29	4.57	2.64	66.3	654	368	422	85.5	67.4	K
2	1.5	N-90L	1440	88.0	9.95	6.29	3.63	68.7	611	366	406	85.4	67.3	K
3	2.2	N-100L	1450	128	14.5	8.83	5.10	66.1	805	412	502	88.3	69.3	M
4	3.0	N-112S	1440	176	19.9	11.3	6.55	59.8	751	387	458	87.9	73.2	L
5	3.7	N-112M	1460	214	24.2	13.9	8.00	62.5	788	319	453	89.2	72.7	L
5.5	4.0	N-112M	1460	231	26.2	14.5	8.35	59.7	752	294	418	89.0	74.8	K
7.5	5.5	N-132S	1470	316	35.7	-	11.9	64.1	958	378	564	90.2	72.0	N
10	7.5	N-132M	1470	431	48.7	-	16.2	58.5	629	254	378	90.6	71.1	J
15	11	N-160M	1470	632	71.5	-	22.4	50.6	617	249	354	91.6	74.6	H
20	15	N-160L	1480	856	96.8	-	31.2	57.0	659	275	364	92.2	72.3	J
25	18.5	N-180MS	1490	1050	119	-	35.7	49.9	800	292	404	93.8	76.7	K
30	22	N-180M	1480	1260	142	-	40.8	43.6	699	245	339	93.6	80.2	J
40	30	N-180L	1480	1710	194	-	60.2	52.9	743	285	411	93.6	74.2	K
50	37	N-200L	1480	2110	239	-	70.0	46.0	777	287	391	94.1	78.2	K
60	45	N-200LL	1480	2570	290	-	82.5	47.0	876	341	442	94.5	80.7	L

** 1/8 HP is TENV

Motor Thermal Rating for Cyclic Applications

Table 4.39 Motor Thermal Rating Table

Motor Power HP *(kW)*	Allowable C x Z				Motor Inertia lb-in^2 *(kg-m^2)*	
	below 35% ED[1]	35% ~ 50% ED[1]	50% ~ 80% ED[1]	80% ~ 100% ED[1]	Standard	with Brake
1/8 (0.1)	3200	3000	2000	1200	1.11 (0.000325)	1.2 (0.00035)
1/4 (0.2)	2200	2800	2800	2500	1.71 (0.0005)	1.88 (0.00055)
1/3 (0.25)	2200	2800	2800	2500	1.71 (0.0005)	1.88 (0.00055)
1/2 (0.4)	1800	2200	1500	1500	2.22 (0.00065)	2.31 (0.000675)
3/4 (0.55)	1800	2200	1500	1500	3.45 (0.00101)	3.79 (0.00111)
1 *(0.75)*	1400	1400	800	500	8.03 (0.00235)	8.82 (0.00258)
1.5 *(1.1)*	1400	1400	800	500	11.5 (0.00337)	13.5 (0.00396)
2 *(1.5)*	1200	1200	500	400	13.4 (0.00391)	15.4 (0.0045)
3 *(2.2)*	1000	900	400	200	30.1 (0.0088)	33.4 (0.00978)
5 *(3.7)*	800	800	800	700	66.3 (0.0194)	71.4 (0.0209)
7.5 *(5.5)*	300	300	200	150	99.4 (0.0291)	105 (0.0306)
10 *(7.5)*	400	350	300	300	140 (0.0409)	154 (0.045)
15 *(11)*	200	200	150	150	*192 (0.0561)*	*206 (0.0602)*
20 *(15)*	100	90	78	68	*340 (0.0995)*	*393 (0.115)*
25 *(18.5)*	75	65	55	50	*875 (0.256)*	*926 (0.271)*
30 *(22)*	75	65	55	50	*875 (0.256)*	*926 (0.271)*
40 *(30)*	55	40	17	10	*1110 (0.326)*	*1170 (0.342)*

Note: [1] % ED = Duty Cycle.

The calculated C x Z value (steps 1 – 3 outlined below) should be less than the allowable value listed in Motor Thermal Rating table above.

1. Obtain the C value:

$$C = \frac{I_M + I_L}{I_M}$$

I_M = Moment of Inertia of the Motor.
I_L = Moment of Inertia of the Load as seem from the motor shaft.

2. Obtain the Z value (number of starts per hour):

(a) Assume that one operating period consists of "on-time" ta (sec.), "off-time" tb (sec.) and the motor is started nr (times/cycle).

$$Zr = \frac{3600 \cdot nr}{ta + tb} \text{ (times/hour)}$$

(b) When inching, ni (times/cycle) is included in 1 cycling (ta+tb), the number of inching times per hour Zi, is then included in the number of starts.

$$Zi = \frac{3600 \cdot ni}{ta + tb} \text{ (times/hour)}$$

(c) Calculate *Z* by adding *Zr* to *Zi* by the following formula.

$$Z = Zr + \frac{1}{2} \cdot Zi = \frac{3600}{ta + tb} \cdot \left(nr + \frac{1}{2} ni\right) \text{ (times/hour)}$$

3. Calculate *C x Z* (the product of *C* and *Z*)

Use the value of *C* obtained in Step (1) and value of *Z* obtained in Step (2).

4. Obtain the duty cycle %ED and compare calculated *C x Z* in the appropriate column from Motor Thermal Rating Table.

$$\%ED = \frac{ta}{ta + tb} \cdot 100$$

ta = on-time
tb = off-time

Standard Wiring Diagrams

Illustrated below are the wiring diagrams for our standard motors. For additional information please refer to the motor name plate. Due to changes in design features, this diagram may not always agree with that on the motor. If different, the motor diagram found inside the conduit box cover should be used.

Table 4.40 Wiring Configuration for 230/460V, 60Hz and 575V, 60Hz by EP.NA Motor

Motor	230/460V, 60Hz			575V, 60Hz		
HP x P	Internal	No. of Leads	Diagram	Internal	No. of Leads	Diagram
1/8 x 4	WYE	9	9-Lead WYE	WYE	3	3-Lead
1/4 x 4						
1/3 x 4						
1/2 x 4						
3/4 x 4						
1 x 4						
1.5 x 4						
2 x 4						
3 x 4						
5 x 4						
7.5 x 4	DELTA	9	9-Lead DELTA	DELTA	3	3-Lead
10 x 4						
15 x 4						
20 x 4						
25 x 4						
30 x 4						
40 x 4						
50 x 4						
60 x 4						

Figure 4.6a 9-Lead WYE

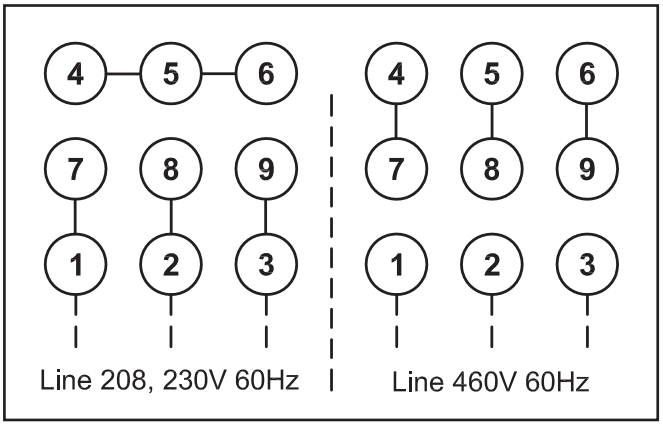

Figure 4.6b 9-Lead DELTA

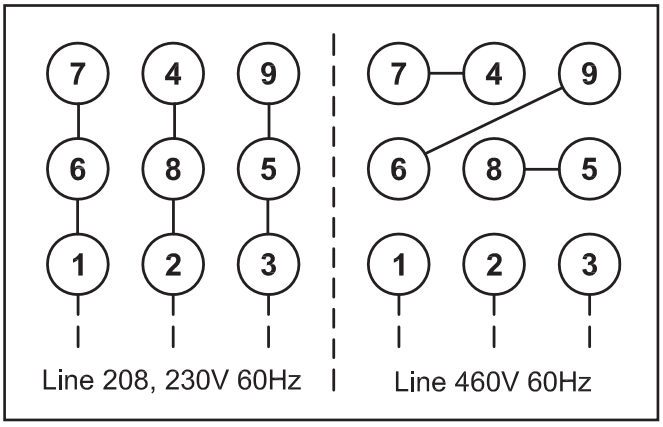

Figure 4.6c 3-Lead SINGLE

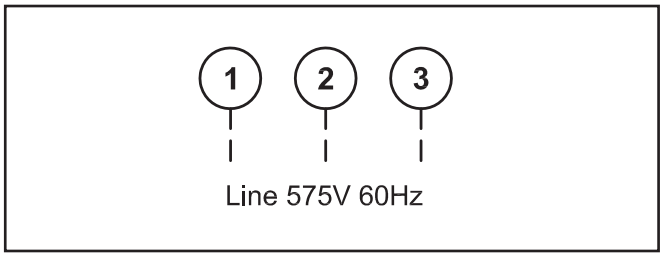

Sold & Serviced By:
ELECTROMATE
Toll Free Phone (877) SERVO98
www.electromate.com
sales@electromate.com

Three-Phase IE3 CE Motors

Table 4.41 Wiring Configuration by IE3 CE Motor

Motor kW x P	Voltage Configuration	Wiring Diagram
.75 x 4	220/380V, 50Hz Three Phase	DELTA-WYE
1.1 x 4		
1.5 x 4		
2.2 x 4		
3.0 x 4		
3.7 x 4		
5.5 x 4	380V, 50Hz Three Phase	WYE-Start DELTA-Run
7.5 x 4		
11 x 4		
15 x 4		
18.5 x 4		
22 x 4		
30 x 4		
37 x 4		
45 x 4		
55 x 4		

Figure 4.7 DELTA-WYE Diagram

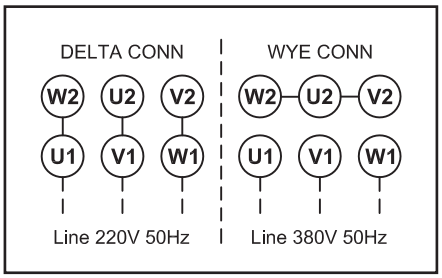

Figure 4.8 WYE-Start DELTA-Run Diagram

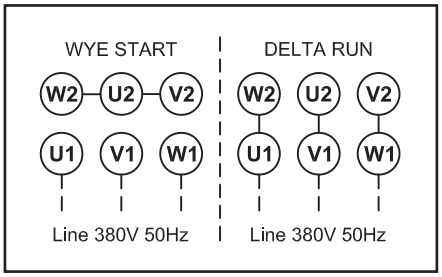

Sold & Serviced By:
ELECTROMATE
Toll Free Phone (877) SERVO98
www.electromate.com
sales@electromate.com

Brakemotor Characteristics

The brakemotor on Cyclo® gearmotors operates with direct current supplied by a dual voltage rectifier for 230/460V, or single voltage rectifier/power module for other noted voltages. Rectifier or power module is mounted in the motor conduit box.

When used for outdoor installations, standard brakemotor must be protected by a cover. Such covers are available from the factory, please inquire when ordering.

Note: Advise the factory when ordering if you require brake torque greater or lesser than those shown as standard in the Brakemotor Characteristics table below.

Brake Characteristics

Table 4.42 Brake Characteristics - Standard torque, Delay Time, Work Capacity

Brake Model	Motor Capacity		Standard Braking Torque ft - lbs *(N - m)*	Braking Delay Time (sec)			Brake Work Capacity		
				Normal Braking Action		Fast Braking Action	Allowable E_0 (J/min)	Gap Adjust (x 10^7 J)	Total E_1 (x 10^7 J)
	HP x 4P	kW x 4P		Standard Wiring	Inverter Wiring[2]				
FB-01A	1/8	0.1	0.7 (1.0)	0.15 ~ 0.2	0.08 ~ 0.12	0.015 ~ 0.02	1080	2.6	6.7
FB-02A	1/8 ~ 1/3	0.1 ~ 0.25	1.4 (2.0)						
FB-05A	1/4 ~ 1/2	0.2 ~ 0.4	2.9 (4.0)	0.1 ~ 0.15	0.03 ~ 0.07	0.01 ~ 0.015			
FB-1D	1/2	0.4	5.8 (7.5)	0.2 ~ 0.3	0.1 ~ 0.15	0.01 ~ 0.02	1620	7.0	33.1
FB-2D	3/4	0.55	11 (15)				2580	6.8	29.5
FB-3D	3/4	0.55	16 (22)	0.3 ~ 0.4	0.15 ~ 0.2		3360	16.4	53.7
FB-1E	1	0.75	5.5 (7.5)	0.25 ~ 0.45	0.15 ~ 0.25	0.01 ~ 0.03	2580	11.6	38.7
FB-1HE	1.5	1.1	8.0 (11)	0.45 ~ 0.65	0.25 ~ 0.35		3360	20.8	46.3
FB-2E	2	1.5	11 (15)	0.35 ~ 0.55	0.15 ~ 0.25				
FB-3E	3	2.2	16 (22)	0.75 ~ 0.95	0.4 ~ 0.5	0.02 ~ 0.04	5720	26.3	105.3
FB-5E	5	3.7	30 (40)	1.1 ~ 1.3	0.4 ~ 0.5		6900	57.4	382.8
FB-8E	7.5	5.5	40 (55)	1.0 ~ 1.2	0.3~ 0.4				
FB-10E	10	7.5	59 (80)	1.8 ~ 2.0	0.6 ~ 0.7		10800	110.2	551.1
FB-15E	15	11	80 (110)	1.6 ~ 1.8	0.5 ~ 0.6				
FB-20	20	15	110 (150)	-	-	0.06 ~ 0.14 [3]	22440	191.6	1150
FB-30	25	18.5	140 (190)	-		0.03 ~ 0.11[3]			
	30	22	160 (220)						
	40	30	150 (200)						
ESB-250[2]	50	37	200 (266)	-	-	0.065	30672	52	267
	60	45	235 (320)						

Notes: **[1]** Also applies to wiring where brake is powered separately from the motor leads.

[2] Available only with power module rated for use at 200VAC or 220VAC.
Above table applies to standard brake specification under standard brake torque. Special brakes may perform differently from those shown.
Initial brake torque may be lower than specified brake torque.
If this is the case, under light load start and stop the motor to wear-in the braking surface.
To improve performance for positioning accuracy or lifting applications, consider using fast braking action circuit.
If the brake is operated at a rate greater than the Allowalbe Brake Work Capacity, E0,
the brake performance may degrade or become inoperable.
ESB Type brake uses a power module (HD-110M3) that is installed separately from the brakemotor.
ESB Type brake cannot be operated in a vertical orientation.

[3] Values shown for 200V Class and 400V Class Brakes. Please consult factory for 575V Brakes.

Sold & Serviced By:
ELECTROMATE
Toll Free Phone (877) SERVO98
www.electromate.com
sales@electromate.com

Brakemotor Characteristics

Table 4.43 Brake Maintenance - Brake Gap, Brake Lining Thickness

Brake Model	Brake Gap			Brake Lining Thickness	
	Spec. (Initial) inch (mm)	Limit inch (mm)	Adjustment Method	Spec. (Initial) inch (mm)	Limit inch (mm)
FB-01A	0.008 ~ 0.014 (0.2 ~ 0.35)	0.020 (0.5)	Twist detent	0.276 (7.0)	0.256 (6.5)
FB-02A					
FB-05A			Shim		
FB-1D	0.012 ~ 0.016 (0.3 ~ 0.4)	0.024 (0.60)			0.236 (6.0)
FB-2D				0.347 (8.8)	0.307 (7.8)
FB-3D		0.028 (0.70)		0.355 (9.0)	0.315 (8.0)
FB-1E	0.010 ~ 0.014 (0.25 ~ 0.35)	0.024 (0.60)		0.347 (8.8)	0.307 (7.8)
FB-1HE		0.030 (0.75)		0.355 (9.0)	0.315 (8.0)
FB-2E					
FB-3E		0.034 (0.85)		0.410 (10.4)	0.331 (8.4)
FB-5E	0.014 ~ 0.018 (0.35 ~ 0.45)	0.040 (1.0)	Nut	0.394 (10.0)	0.236 (6.0)
FB-8E					
FB-10E		0.047 (1.2)		0.433 (11.0)	0.276 (7.0)
FB-15E					
FB-20	0.024 ~ 0.028 (0.6 ~ 0.7)	0.059 (1.5)		0.630 (16.0)	0.472 (12.0)
FB-30					
ESB-250[2]	0.028 (0.7)	0.079 (2.0)	Threaded Ring	0.236 (6.0)	0.142 (3.6)

Notes: Available only with power module rated for use at 200VAC or 220VAC.
ESB Type brake uses a power module (HD-110M3) that is installed separately from the brakemotor.
ESB Type brake cannot be operated in a vertical orientation.

Sold & Serviced By:
ELECTROMATE
Toll Free Phone (877) SERVO98
www.electromate.com
sales@electromate.com

Brakemotor: Brake Current Rating

Table 4.44a Brake Current for Standard Fractional Motor and AF-Motor (AV)

Brake Model	230VAC, 50/60Hz			460VAC, 50/60Hz			575VAC, 50/60Hz		
	Vdc (V)	Idc (A)	Iac (A)	Vdc (V)	Idc (A)	Iac (A)	Vdc (V)	Idc (A)	Iac (A)
FB-01A	207VDC Full Wave	0.05	0.06	207VDC Half Wave	0.05	0.04	259VDC Half Wave	0.05	0.03
FB-02A		0.08	0.1		0.08	0.06		0.09	0.07
FB-05A									
FB-1D		0.1	0.1		0.1	0.1		0.1	0.1
FB-2D		0.2	0.2		0.2	0.2		0.2	0.2
FB-3D									

Table 4.44b Brake Current for EP.NA Motor

Brake Model	230VAC, 50/60Hz			240VAC, 50/60Hz			460VAC, 50/60Hz			480VAC, 50/60Hz		
	Vdc (V)	Idc (A)	Iac (A)	Vdc (V)	Idc (A)	Iac (A)	Vdc (V)	Idc (A)	Iac (A)	Vdc (V)	Idc (A)	Iac (A)
FB-1E	207VDC Full Wave	0.1	0.1	216VDC Full Wave	0.1	0.1	207VDC Half Wave	0.1	0.1	216VDC Half Wave	0.1	0.1
FB-1HE		0.2	0.2		0.2	0.2		0.2	0.2		0.2	0.2
FB-2E												
FB-3E		0.2	0.2		0.2	0.2		0.2	0.3		0.2	0.2
FB-5E		0.4	0.4		0.4	0.4		0.4	0.3		0.4	0.3
FB-8E												
FB-10E		0.4	0.4		0.5	0.5		0.4	0.3		0.5	0.4
FB-15E												
FB-20	207VDC /104VDC Module[2]	2.0/1.0[3]	2.0/0.8[3]	216VDC /108VDC Module[2]	2.1/1.1[3]	2.1/0.8[3]	414VDC /207VDC Module[2]	1.0/0.5[3]	1.0/0.4[3]	432VDC /216VDC Module[2]	1.0/0.5[3]	1.0/0.4[3]
FB-30												
ESB-250[1]												

Table 4.44b continued... Brake Current for EP.NA Motor

Brake Model	575VAC, 50/60Hz		
	Vdc (V)	Idc (A)	Iac (A)
FB-1E	259VDC Half Wave	0.1	0.1
FB-1HE		0.2	0.2
FB-2E			
FB-3E		0.2	0.2
FB-5E		0.4	0.3
FB-8E			
FB-10E		0.5	0.4
FB-15E			
FB-20	259VDC Half Wave	0.4	0.3
FB-30			
ESB-250[1]			

Notes: **[1]** ESB-250 is available only with power module rated for use at 200VAC or 220VAC.

[2] Power module type brake control generates two voltage levels--1) high excitation voltage for initial release, and 2) lower holding voltage.

[3] 2 brake current values shown corresponding to the two voltage levels from power module--1) excitation current on initial power up, and 2) holding current.

Brake coil design will be specific to brake voltage specified at time of order. Check motor nameplate, to determine brake voltage rating. FB-20 and FB-30 Brake Coil and Power Module come in two voltage ranges--1) 200-240VAC, and 2) 380-480VAC.

Brakemotor: Brake Current Rating

Table 4.45a Brake Current for Fractional Motor CE Motor

Brake Model	220VAC, 50/60Hz			230VAC, 50/60Hz			380VAC, 50/60Hz			400VAC, 50/60Hz		
	Vdc (V)	Idc (A)	Iac (A)	Vdc (V)	Idc (A)	Iac (A)	Vdc (V)	Idc (A)	Iac (A)	Vdc (V)	Idc (A)	Iac (A)
FB-01A	99VDC Half Wave	0.13	0.12	104VDC Half Wave	0.13	0.12	171VDC Half Wave	0.06	0.04	180VDC Half Wave	0.06	0.04
FB-02A		0.2	0.2		0.2	0.2		0.08	0.07		0.08	0.07
FB-05A												
FB-1D		0.3	0.2					0.1	0.1		0.1	0.1

Table 4.45b Combination Table with Brakemotor Inertia

Brake Model	Motor Frame Sizes	Inertia WR2 lb-in2 (kg-m2)
FB-1E	N-80M	8.82 (0.00258)
FB-1HE	N-90S	13.5 (0.00396)
FB-2E	N-90L	15.4 (0.0045)
FB-3E	N-100L	33.4 (0.00978)
FB-5E	N-112M	71.4 (0.0209)
FB-8E	N-132S	105 (0.0306)
FB-10E	N-132M	154 (0.045)
FB-15E	N-160M	206 (0.0602)
FB-20	N-160L	393 (0.115)
FB-30	N-180MS	926 (0.271)
	N-180M	926 (0.271)
FB-30	N-180L	1170 (0.342)
ESB-250	N-200L	1380 (0.404)
	N-200LL	2550 (0.745)

Table 4.45c Brake Current for CE Motor

Brake Model	220VAC, 50/60Hz			230VAC, 50/60Hz			380VAC, 50/60Hz			400VAC, 50/60Hz		
	Vdc (V)	Idc (A)	Iac (A)	Vdc (V)	Idc (A)	Iac (A)	Vdc (V)	Idc (A)	Iac (A)	Vdc (V)	Idc (A)	Iac (A)
FB-01A	99VDC Half Wave	0.13	0.12	104VDC Half Wave	0.13	0.12	171VDC Half Wave	0.06	0.04	180VDC Half Wave	0.06	0.04
FB-02A		0.2	0.2		0.2	0.2		0.08	0.07		0.08	0.07
FB-05A												
FB-1D		0.3	0.2					0.1	0.1		0.1	0.1
FB-1E		0.2										
FB-1HE		0.5	0.4		0.5	0.4		0.2	0.2		0.2	0.2
FB-2E												
FB-3E		0.6	0.5		0.6	0.5		0.3	0.2		0.3	0.2
FB-4E												
FB-5E		1	0.7		1	0.8		0.4	0.3		0.4	0.3
FB-8E												
FB-10E		1.1	0.9		1.2	0.9		0.5	0.4		0.5	0.4
FB-15E												
FB-20	198VDC /99VDC Module[2]	2.0/1.0[3]	2.0/0.8[3]	207VDC /104VDC Module[2]	2.0/1.0[3]	2.0/0.8[3]	342VDC /171VDC Module[2]	0.8/0.4[3]	0.8/0.3[3]	360VDC /180VDC Module[2]	0.9/0.5[3]	0.9/0.4[3]
FB-30												
ESB-250[1]		2.2/1.1[3]	2.2/0.9[3]									

Notes: **[1]** ESB-250 is available only with power module rated for use at 200VAC or 220VAC.

[2] Power module type brake control generates two voltage levels--1) high excitation voltage for initial release, and 2) lower holding voltage.

[3] 2 brake current values shown corresponding to the two voltage levels from power module--1) excitation current on initial power up, and 2) holding current.
Brake coil design will be specific to brake voltage specified at time of order. Check motor nameplate, to determine brake voltage rating.
FB-20 and FB-30 Brake Coil and Power Module come in two voltage ranges--1) 200-240VAC, and 2) 380-480VAC.

Brakemotor: Optional Brake Torques

Table 4.46 Standard Brake Models

Brake Model	Motor Capacity		Braking Torque ft-lbs (N-m)	
	HP x 4P	kW x 4P	Standard	Optional
FB-01A	1/8	0.1	0.7 (1.0)	0.25 (0.34), 0.3 (0.4), 0.4 (0.54), 0.48 (0.65), 0.6 (0.8), 0.7 (1.0), 1.0 (1.4)
FB-02A	1/8 ~ 1/3	0.1 ~ 0.25	1.4 (2.0)	0.48 (0.65), 0.6 (0.8), 0.7 (1.0), 1.0 (1.4), 1.4 (2.0), 1.9 (2.6), 2.3 (3.1)
FB-05A	1/4 ~ 1/2	0.2 ~ 0.4	2.9 (4.0)	0.7 (1.0), 1.0 (1.4), 1.4 (2.0), 1.9 (2.6), 2.3 (3.1)
FB-1D	1/2	0.4	5.8 (7.5)	1.9 (2.6), 2.3 (3.1), 2.7 (3.7), 3.9 (5.3), 4.6 (6.2), 6.9 (9.4) 7.7 (10)
FB-2D	3/4	0.55	11 (15)	3.6 (4.9), 4.3 (5.8), 5.1 (6.9), 7.2 (9.8), 8.7 (12), 13 (18), 14 (19)
FB-3D	3/4	0.55	16 (22)	5.3 (7.2), 6.6 (9.0), 7.4 (10), 11 (15), 13 (18), 19 (26), 21 (28)
FB-1E	1	0.75	5.5 (7.5)	7.4 (10), 4.0 (5.5), 3.0 (4.0), 2.2 (3.0)
FB-1HE	1.5	1.1	8.0 (11)	11 (15), 5.5 (7.5), 3.7 (5.0), 2.2 (3.0)
FB-2E	2	1.5	11 (15)	15 (20), 8.0 (11), 5.5 (7.5), 3.7 (5.0)
FB-3E	3	2.2	16 (22)	22 (30), 11 (15), 7.4 (10), 4.4 (6.0)
FB-4E	4	3.0	22 (30)	30 (40), 16 (22), 11 (15), 7.4 (10)
FB-5E	5	3.7	30 (40)	40 (55), 22 (30), 15 (20), 7.4 (10)
FB-8E	7.5	5.5	40 (55)	53 (72), 30 (40), 22 (30), 15 (20)
FB-10E	10	7.5	59 (80)	80 (110), 44 (60), 30 (40), 15 (20)
FB-15E	15	11	80 (110)	110 (150), 59 (80), 44 (60), 29 (40)
FB-20	20	15	110 (150)	160 (220), 130 (175), 89 (120), 74 (100), 63 (85), 44 (60)
FB-30	25	18.5	140 (190)	160 (220), 110 (150), 89 (120), 74 (100), 44 (60)
	30	22	160 (220)	130 (175), 110 (150), 89 (120), 63 (85)
	40	30	150 (200)	120 (160), 74 (100)
ESB-250	50	37	195 (266)	275 (372), 235 (320), 155 (212), 120 (160), 78 (106)
	60	45	235 (320)	315 (426), 275 (372), 195(266), 155 (212), 120 (160)

Sold & Serviced By:
ELECTROMATE
Toll Free Phone (877) SERVO98
www.electromate.com
sales@electromate.com

Brakemotor Standard Wiring Connection

Models FB-01A through FB-15E, 230/460V, 60Hz or 575V, 60Hz

Normal Brake Action, 230V or 575V Brake

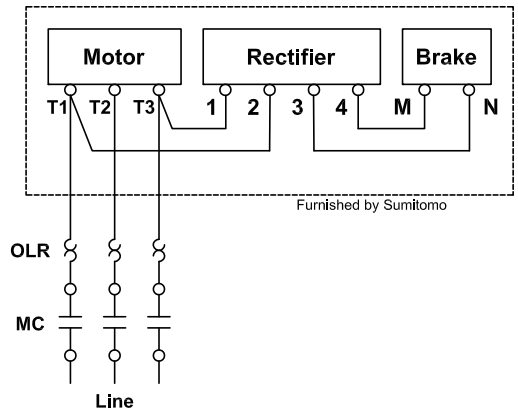

Fast Brake Action, 230V Brake

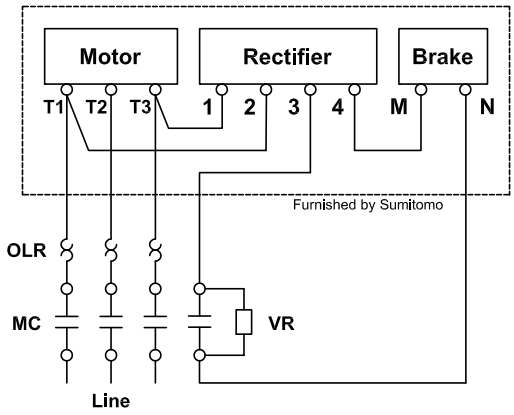

Normal Brake Action, 460V Brake

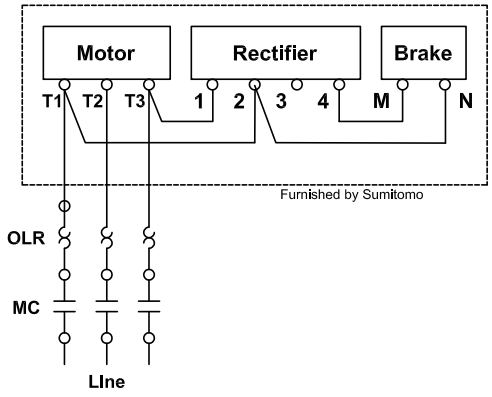

Fast Brake Action, 460V or 575V Brake

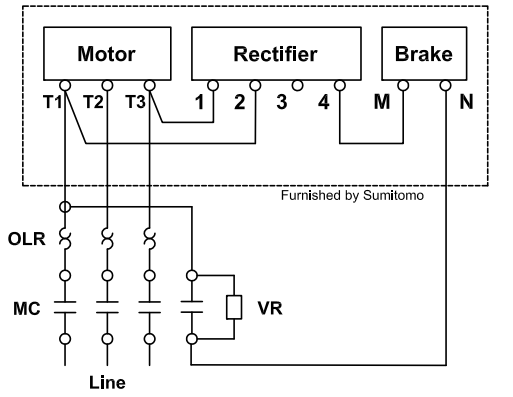

Key:
MC: Electromagnetic Relay
OLR: Overload or Thermal Relay
VR: Varistor (protective device, refer to Varaistor Specification Table)

Brakemotor Standard Wiring Connection

Table 4.47 Varistor Specification Table

Operating Voltage		190-230V	380-460V	575V
Varistor Rated Voltage		AC260-300V	AC510V	AC604V
Varistor Voltage		430-470V	820V	1000V
Rated Watt	FB-01A, 02A, 05A	Over 0.4W	Over 0.4W	Over 0.4W
	FB-1E, 1D	Over 0.6W	Over 0.6W	Over 0.4W
	FB-1HE, 2E, 2D, 3D	Over 1.5W	Over 1.5W	Over 0.6W
	FB-3E, 4E	Over 1.5W	Over 1.5W	Over 0.6W
	FB-5E, 8E	Over 1.5W	Over 1.5W	Over 1.5W
	FB-10E, 8E	Over 1.5W	Over 1.5W	Over 1.5W
	FB-20, 30			Over 1.5W

Brakemotor Inverter Wiring Connection

Models FB-01A through FB-15E, 230/460V, 60Hz or 575V, 60Hz

Normal Brake Action, 230V or 575V Brake

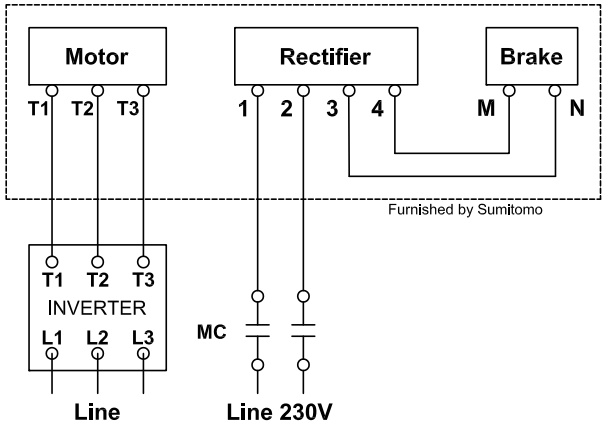

Fast Brake Action, 230V Brake

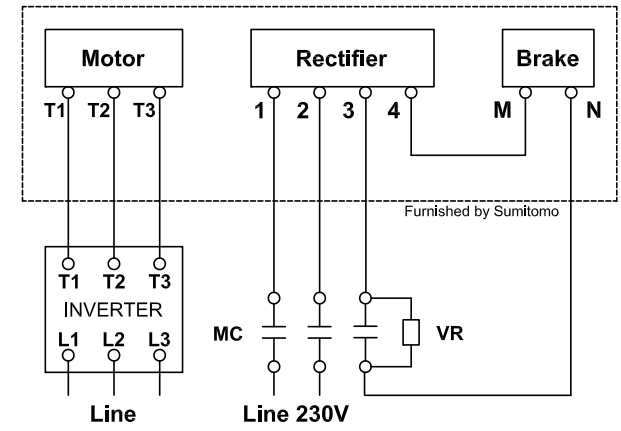

Normal Brake Action, 460V Brake

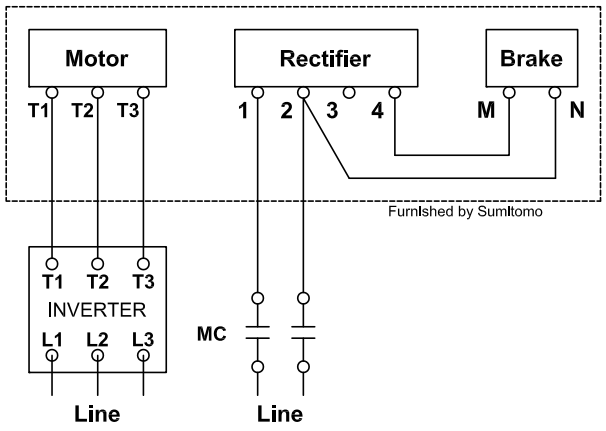

Fast Brake Action, 460V or 575V Brake

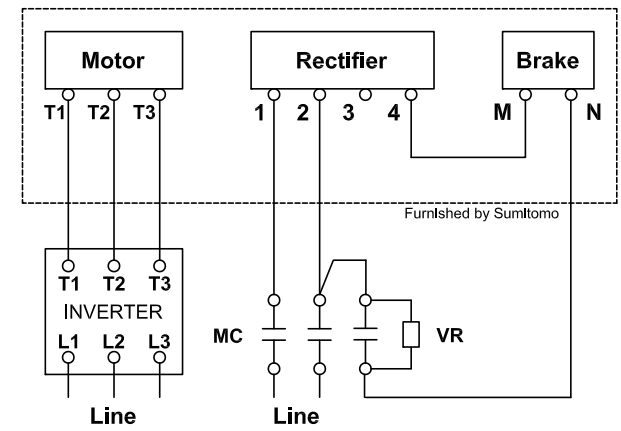

Key:
MC: Electromagnetic Relay
OLR: Overload or Thermal Relay
VR: Varistor (protective device, refer to Varaistor Specification Table)

Brakemotor Inverter Wiring Connection, EP.NA Motor

Table 4.48 Varistor Specification Table

Operating Voltage		190-230V	380-460V	575V
Varistor Rated Voltage		AC260-300V	AC510V	AC604V
Varistor Voltage		430-470V	820V	1000V
Rated Watt	FB-01A, 02A, 05A	Over 0.4W	Over 0.4W	Over 0.4W
	FB-1E, 1D	Over 0.6W	Over 0.6W	Over 0.4W
	FB-1HE, 2E, 2D, 3D	Over 1.5W	Over 1.5W	Over 0.6W
	FB-3E, 4E	Over 1.5W	Over 1.5W	Over 0.6W
	FB-5E, 8E	Over 1.5W	Over 1.5W	Over 1.5W
	FB-10E, 8E	Over 1.5W	Over 1.5W	Over 1.5W
	FB-20, 30			Over 1.5W

Standard Wiring Connection for CE Motors

Models FB-01A through FB-5E, 220/380V, 50Hz

Normal Brake Action, 220V Motor, 220V Brake

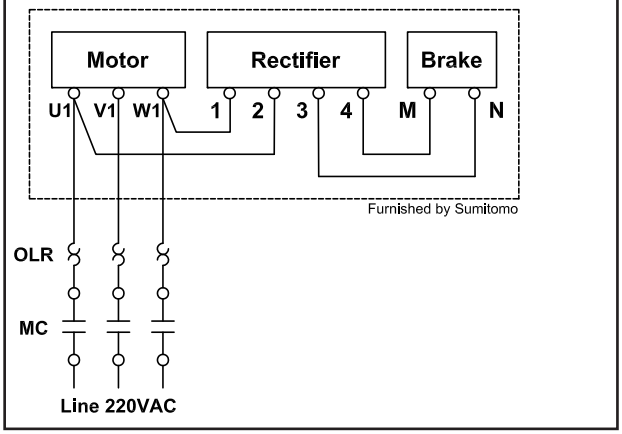

Fast Brake Action, 220V Motor, 220V Brake

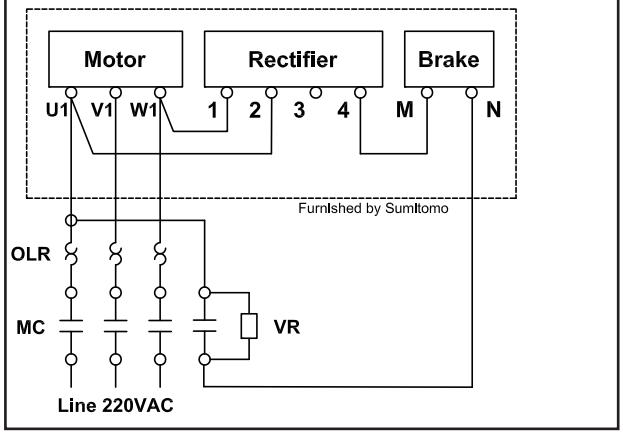

Normal Brake Action, 380V Motor, 220V Brake, Tapped

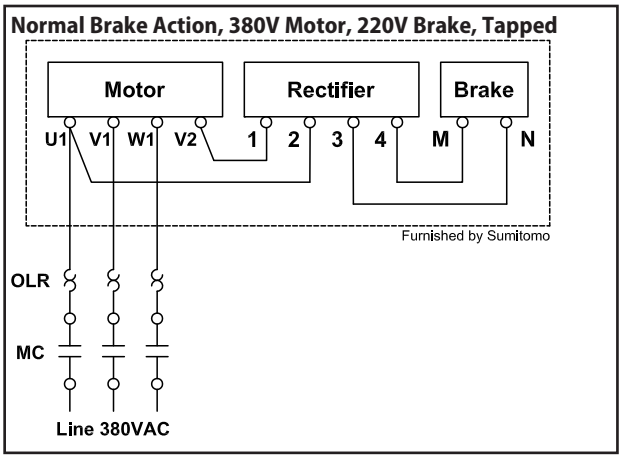

Fast Brake Action, 380V Motor, 220V Brake, Tapped

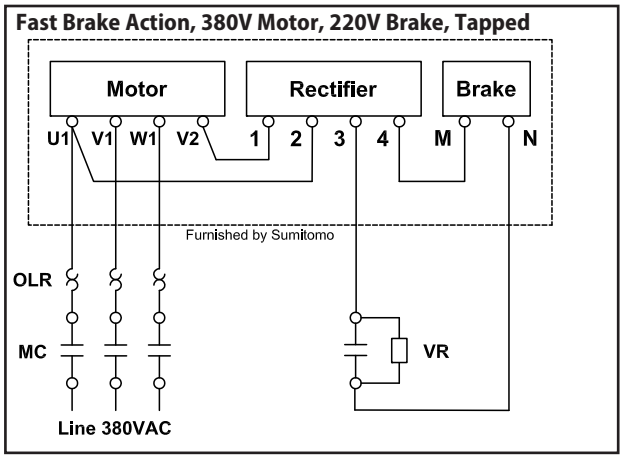

Normal Brake Action, 380V Motor, 220V Brake, Separated

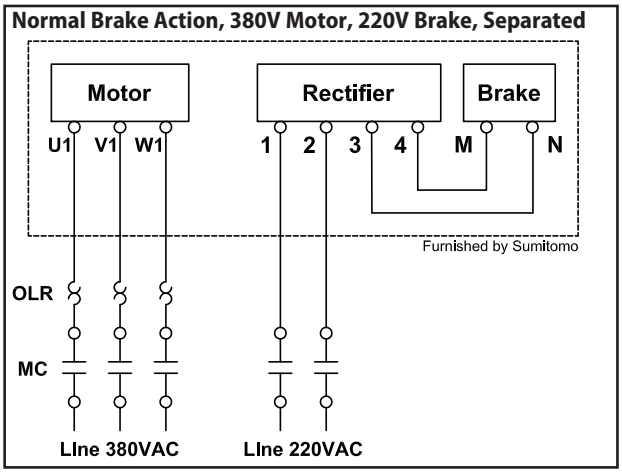

Fast Brake Action, 380V Motor, 220V Brake, Separated

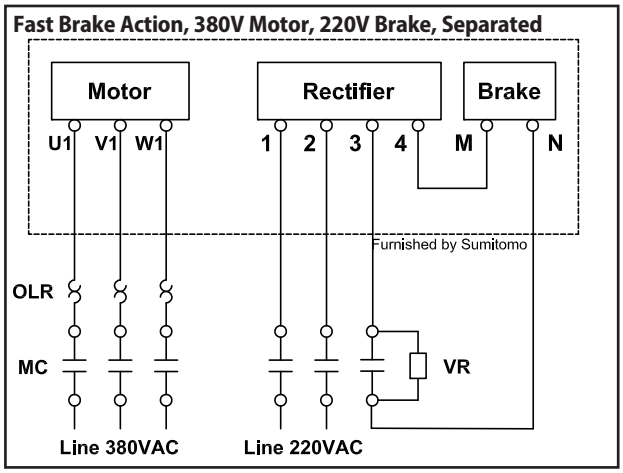

Key:
MC: Electromagnetic Relay
OLR: Overload or Thermal Relay
MCB: Magnetic Circuit Breaker
VR: Varistor (protective device, refer to Varaistor Specification Table)

Standard Wiring Connection for CE Motors (continued)

Models FB-8E through FB-15E, 380V, 50Hz

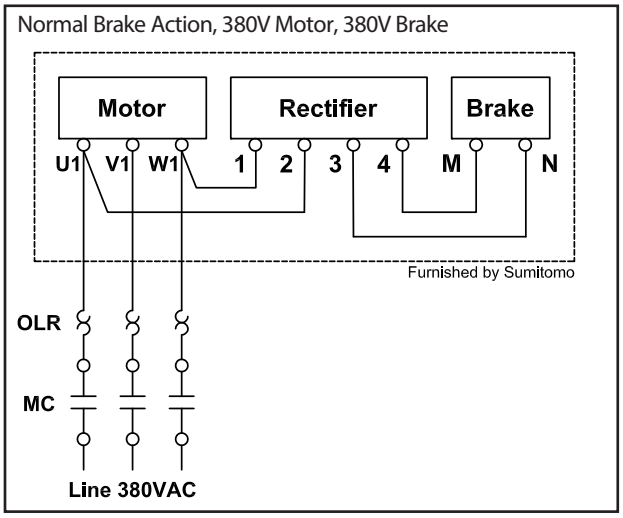

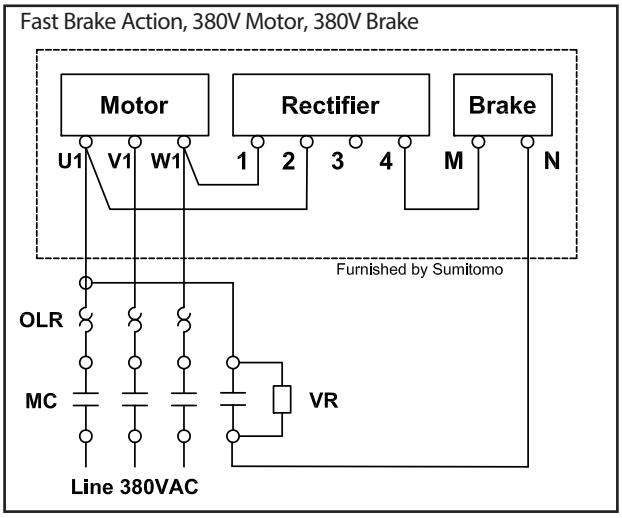

Models FB-01A through FB-15E with Inverter

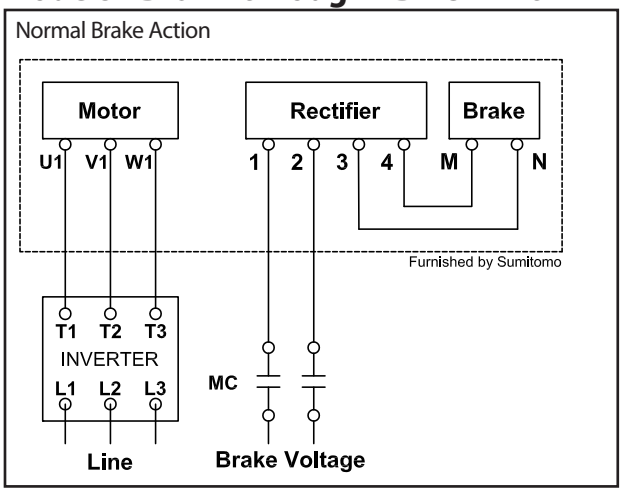

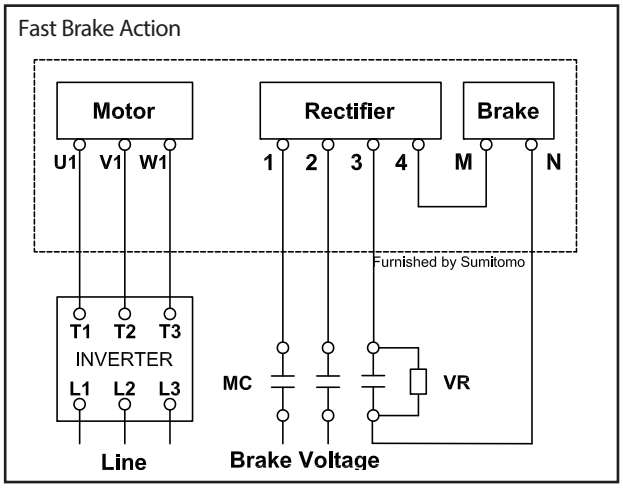

Key:

MC: Electromagnetic Relay **OLR:** Overload or Thermal Relay **MCB:** Magnetic Circuit Breaker
VR: Varistor (protective device, refer to Varaistor Specification Table)

Table 4.49a Standard CE Motor, Motor/Brake Voltage Table

Motor Power kW x 4P	Brake Model	Motor Voltage	Brake Voltage
0.1	FB-01A	220/380V, 50Hz	220V, 50Hz*
0.2, 0.25	FB-02A		
0.4	FB-05A		
0.55	FB-1D		
0.75	FB-1E		
1.1	FB-2E		
1.5	FB-1HE		
2.2	FB-3E		
3.0	FB-4E		
3.7	FB-5E		
5.5	FB-8E	380V, 50Hz	380V, 50Hz
7.5	FB-10E		
11	FB-15E		

Table 4.49b Varistor Specification Table

Operating Voltage		190-230V	380-460V	575V
Varistor Rated Voltage		AC260-300V	AC510V	AC604V
Varistor Voltage		430-470V	820V	1000V
Rated Watt	FB-01A, 02A, 05A	Over 0.4W	Over 0.4W	Over 0.4W
	FB-1E, 1D	Over 0.6W	Over 0.6W	Over 0.4W
	FB-1HE, 2E	Over 1.5W	Over 1.5W	Over 0.6W
	FB-3E, 4E	Over 1.5W	Over 1.5W	Over 0.6W
	FB-5E, 8E	Over 1.5W	Over 1.5W	Over 1.5W
	FB-10E, 8E	Over 1.5W	Over 1.5W	Over 1.5W
	FB-20, 30			Over 1.5W

Wiring for Brake Models FB-20 / FB-30 - EP.NA Motor and IE3 CE Motor

FB-20 and FB-30 Brake Wiring, 480VAC or less

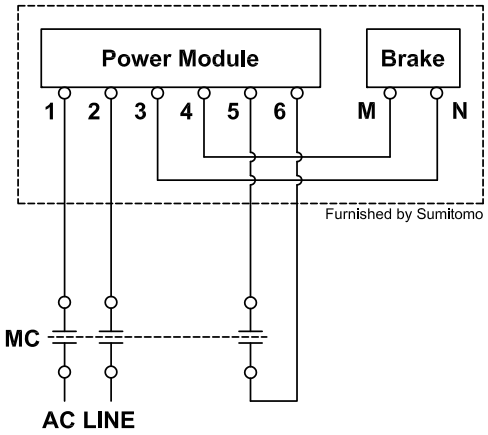

FB-20 and FB-30 Brake Wiring, 575VAC

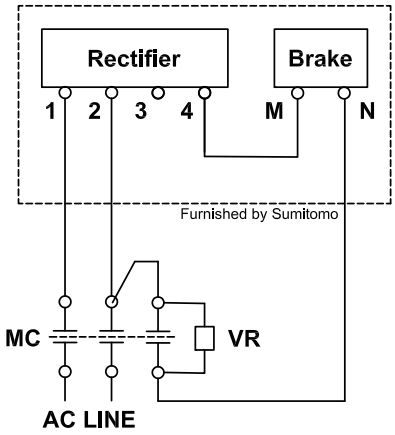

Key:
MC: Electromagnetic Relay
VR: Varistor (protective device, refer to Varaistor Specification Table)

Sold & Serviced By:
ELECTROMATE
Toll Free Phone (877) SERVO98
www.electromate.com
sales@electromate.com

Brake Rectifiers and Brake Power Modules

Table 4.50 Brake Rectifiers for EP.NA Motors

Brake Type	Motor Power HP *(kW)* x P	230V/460V Rectifier		575V Rectifier	
		Model Number	Part Number	Model Number	Part Number
FB-1E	1 x 4	25FW-4FB3	EW107WW-01	10F-6FB3	EW104WW-01
FB-1HE	1.5 x 4				
FB-2E	2 x 4				
FB-3E	3 x 4				
FB-5E	5 x 4				
FB-8E	7.5 x 4				
FB-10E	10 x 4				
FB-15E	15 x 4				
FB-20	20 x 4				
FB-30	25 x 4 30 x 4 40 x 4				

Table 4.51 Brake Rectifiers for IE3 CE Motors

Brake Type	Motor Power HP *(kW)* x P	220V Rectifier		380V Rectifier	
		Model Number	Part Number	Model Number	Part Number
FB-1E	0.75 x 4	10F-2FB2	MP983WW-01		
FB-1HE	1.1 x 4				
FB-2E	1.5 x 4				
FB-3E	2.2 x 4				
FB-4E	3.0 x 4				
FB-5E	3.7 x 4 4.0 x 4				
FB-8E	5.5 x 4			05F-4FB2	MP985WW-01
FB-10E	7.5 x 4			15F-4FB1	EW397WW-01
FB-15E	11 x 4				

Table 4.52 Brake Power Modules for EP.NA Motors and IE3 CE Motors

Brake Type	Motor (HP x P)	170 ~ 300VAC Module		380 ~ 480VAC Module	
		Model Numbers	Part Number	Model Numbers	Part Number
FB-20	20 x 4	13SR-2	EY570WW-01	10SR-4	MQ003WW-01
FB-30	25 x 4 30 x 4 40 x 4				

Sold & Serviced By:
ELECTROMATE
Toll Free Phone (877) SERVO98
www.electromate.com
sales@electromate.com

Warranty

Company warrants that (i) all new equipment and parts (collectively, "Equipment") sold by Company will conform to printed drawings and specification sheets issued by Company and (ii) are free of defects in material and workmanship for the time period shown in Table 1. The warranty period commences on the date of shipment of the Equipment by Company.

If, within the warranty period, Company receives from Buyer written notice of any alleged defect in any of the Equipment and, if the Equipment is found by Company not to conform with these warranties (after Buyer has provided Company a reasonable opportunity to perform any appropriate tests on the allegedly defective Equipment), Company will, at its sole option and expense, either repair or replace the Equipment. In all instances, Company reserves the right to require Buyer to deliver the Equipment for repair or replacement to a designated service center and require Buyer to pay all charges for inbound and outbound transportation and for services of any kind, diagnostic or otherwise, excepting only the direct and actual cost of Equipment repair or replacement. Warranty coverage is limited to parts and labor and does not include travel and other expenses. Buyer applications and use of the Equipment may require installation of safety features. Buyer is responsible for furnishing and installing guards or other safety equipment needed to protect operating personnel, even though such equipment may not be furnished by Company with the Equipment purchased. Equipment supplied, but not manufactured, by Company is warranted only to the extent of the original manufacturer's warranty.

Table 4.53 - Product Warranty

Product	Warranty Period (After Shipment)	Components Excluded
Cyclo® Speed Reducers and Gearmotors	2 Years	Bearings and Seals
Cyclo® Bevel Buddybox Speed Reducers and Gearmotors	2 Years	Bearings and Seals
Cyclo® Helical Buddybox Speed Reducers and Gearmotors	2 Years	Bearings and Seals
Fine Cyclo® Speed Reducers	2 Years	Bearings and Seals
Beier® Variator Mechanical Adjustable Speed Reducers	2 Years	Bearings and Seals
Hyponic® Speed Reducers and Gearmotors	2 Years	Bearings and Seals
Hedcon® Double Enveloping Worm Gear Speed Reducers	2 Years	Bearings and Seals
Helical Shaft Mount Speed Reducers	2 Years	Bearings and Seals
Rhytax®	2 Years	Bearings and Seals
IB Series Servo Gearheads	1 Year	Bearings and Seals
Astero Gearmotors	1 Year	Bearings and Seals
Variable Frequency Inverters	1Year	---
Paramax ® Speed Reducers	2 Years	Bearings and Seals
Compower Planetary Speed Reducers	1 Year	Bearings and Seals
Hansen UniMiner	2 Years	Bearings and Seals
Hansen P4	2 Years	Bearings and Seals
Parts	1 Year	---
Repairs	1 Year	Bearings and Seals

Page intentionally left blank.

Sold & Serviced By:
ELECTROMATE
Toll Free Phone (877) SERVO98
www.electromate.com
sales@electromate.com